Confidential Drawing

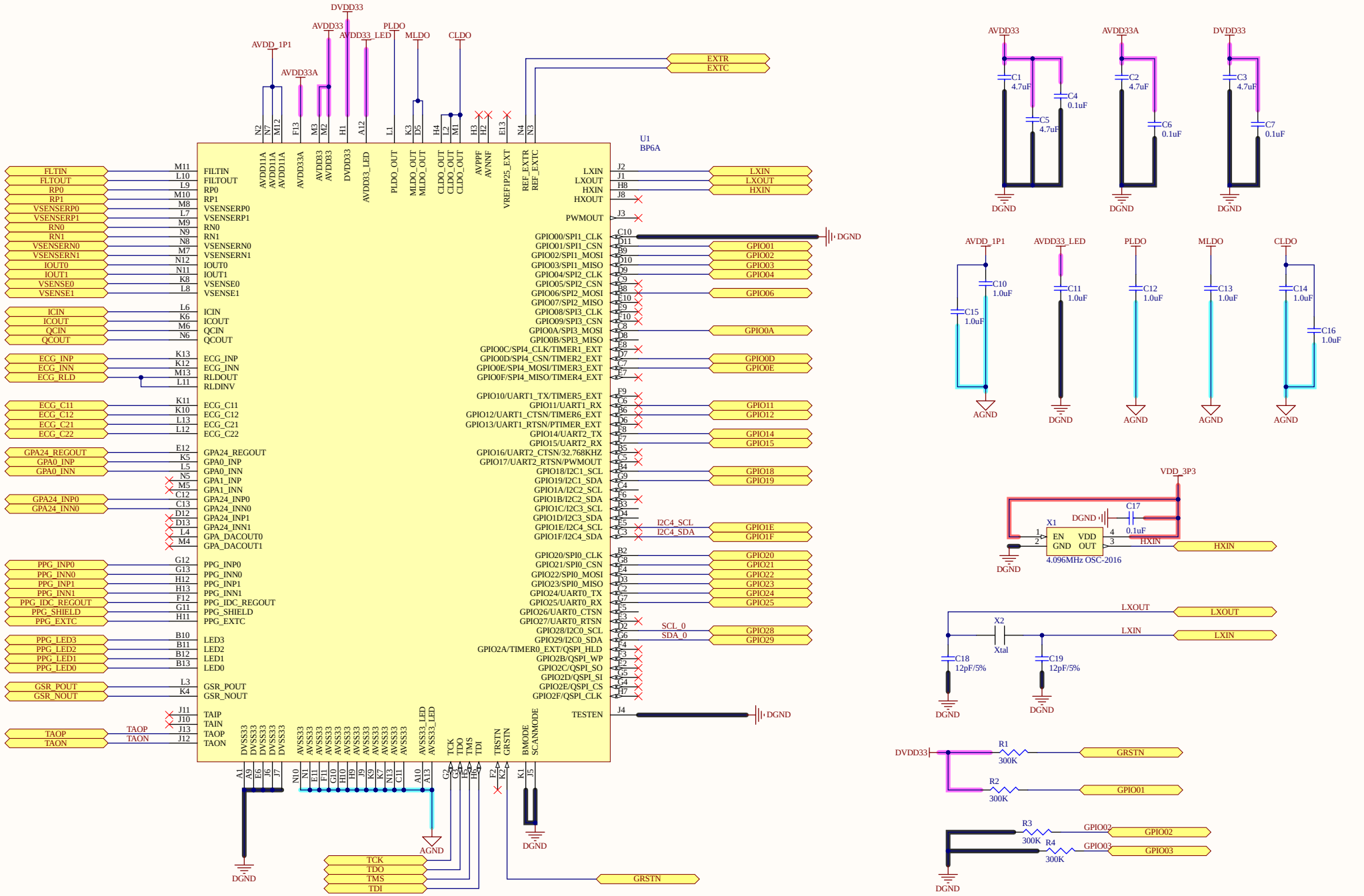

Modify	Change	Date	Drawn	Checked	Approved
△					

SAMSUNG

Project	BP6A_EVK_Shield.PrjPcb	Name	BP6A_EVK_1.SchDoc
	New Biz TF	Drawing No.	Rev No.
		Date: 2024-09-11 Time: 오후 6:50:47	Sheet 1 of 5

Drawn	Checked		Approved

Confidential Drawing

Confidential Drawing

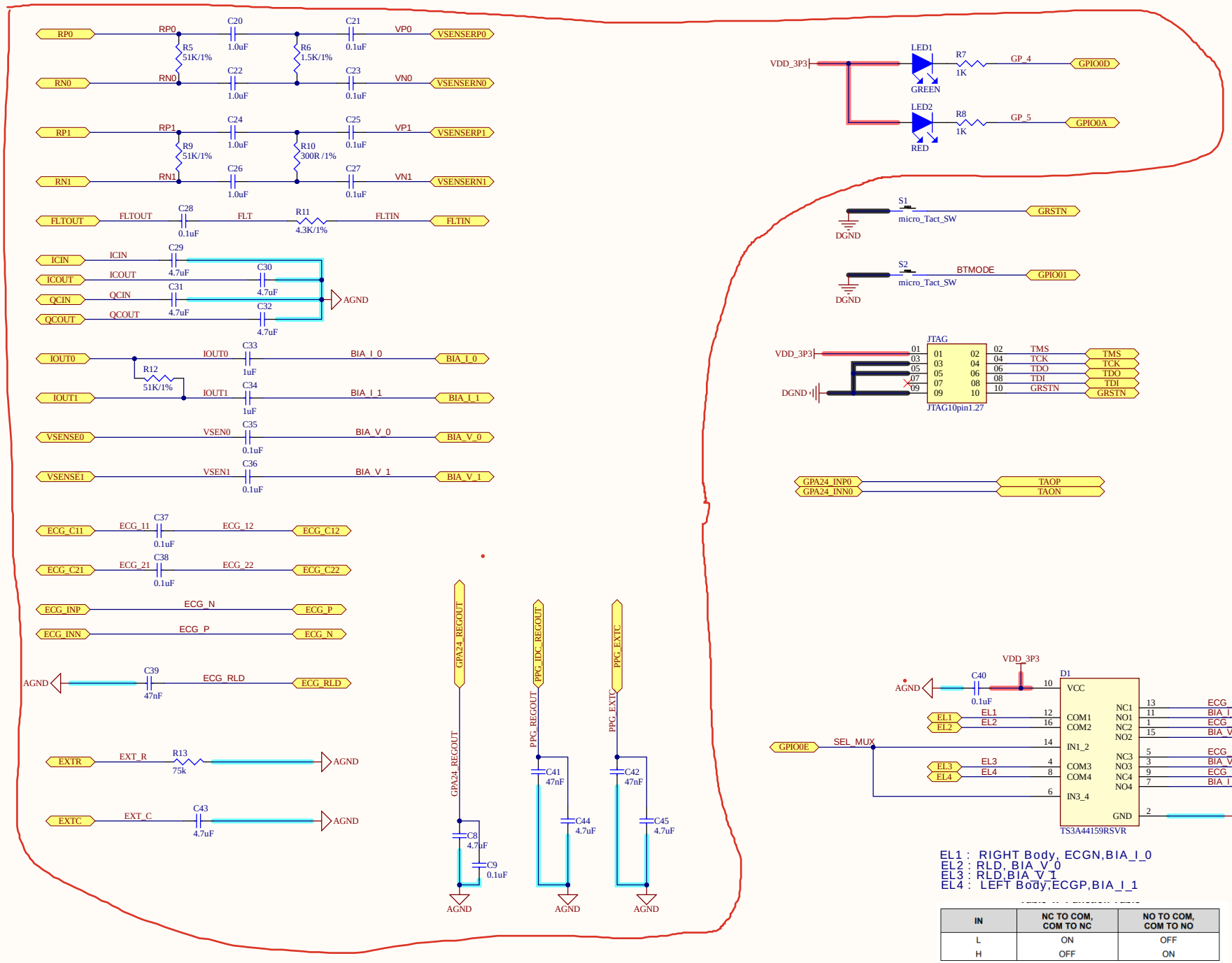

EL1 : RIGHT Body, ECGN,BIA_I_0
EL2 : RLD, BIA_V_0
EL3 : RLD,BIA_V_1
EL4 : LEFT Body,ECGP,BIA_I_1

IN	NC TO COM, COM TO NC	NO TO COM, COM TO NO
L	ON	OFF
H	OFF	ON

Modify		Change	Date	Drawn	Checked	Approved

SAMSUNG

Project	Name	Drawn	Checked	Approved
BP6A_EVK_Shield.PrjPcb	BP6A_EVK_2.SchDoc			
New Biz TF	Drawing No. / Rev No.			
	Date:2024-09-11 Time:오후 6:50:47 Sheet 2 of 5			

Confidential Drawing

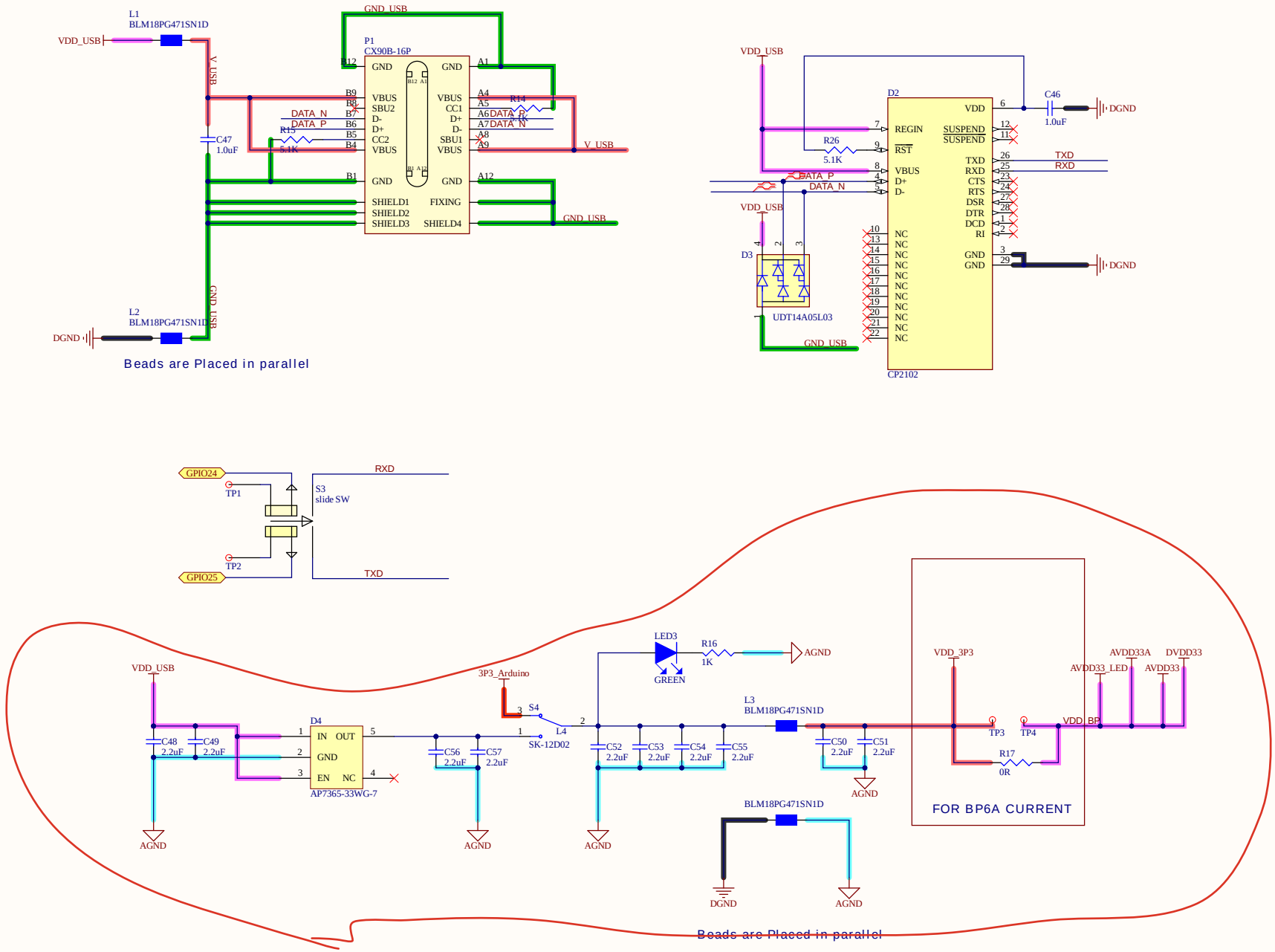

Modify	Change	Date	Drawn	Checked	Approved
△					

SAMSUNG

Project: BP6A_EVK_Shield.PrjPcb

New Biz TF

Name: BP6A_EVK_3.SchDoc

Drawing No. | Rev No.

Date: 2024-09-11 Time: 오후 6:50:47 Sheet 3 of 5

Drawn | Checked | Approved

Confidential Drawing

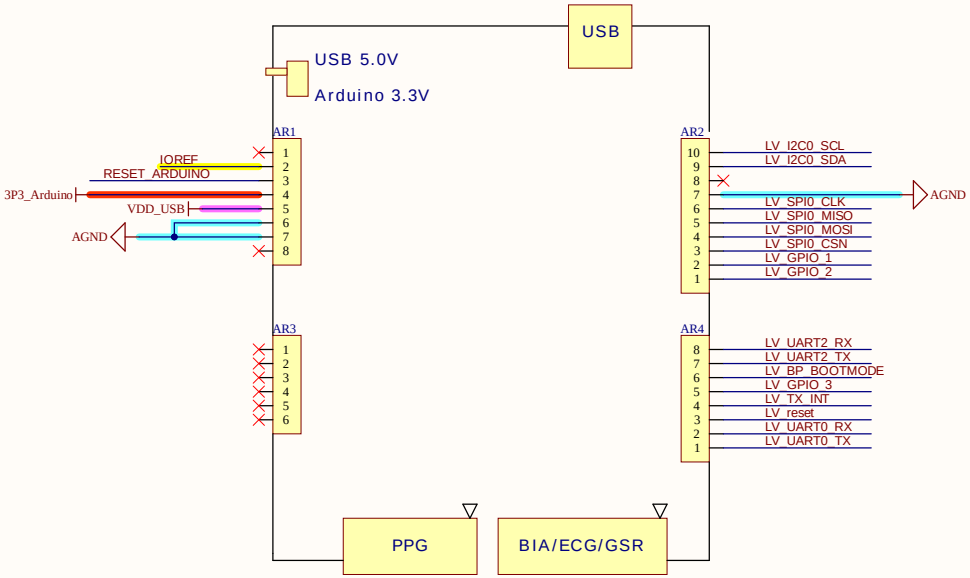

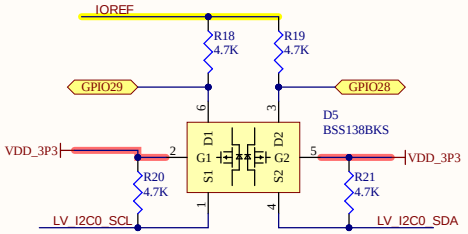

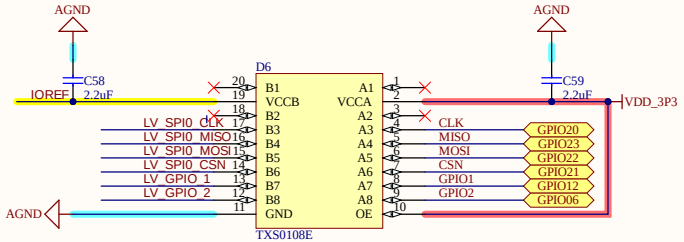

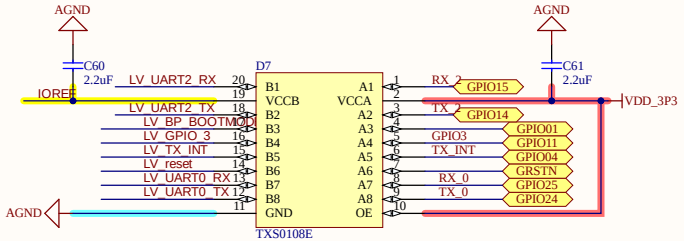

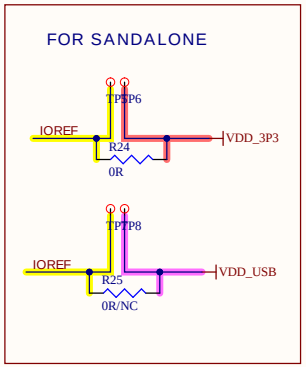

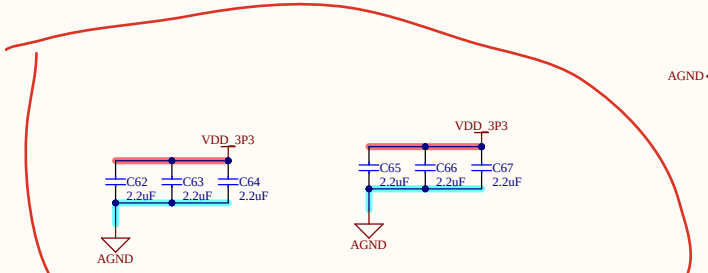

VccA <= VccB(IOREF)

VccA : BP6A Vdd3p3

VccB : Arduino Vdd

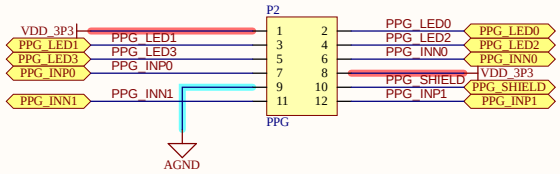

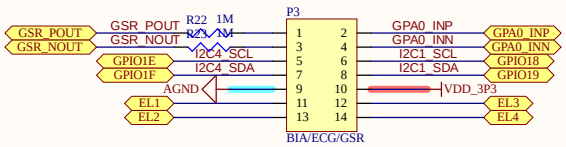

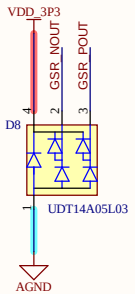

Modify		Change	Date	Drawn	Checked	Approved

SAMSUNG

Project	Name	Drawn	Checked	Approved
BP6A_EVK_Shield.PrjPcb	BP6A_EVK_4.SchDoc			
New Biz TF	Drawing No. / Rev No.			
	Date:2024-09-11 Time:오후 6:50:47 Sheet 4 of 5			

Confidential Drawing

Confidential Drawing

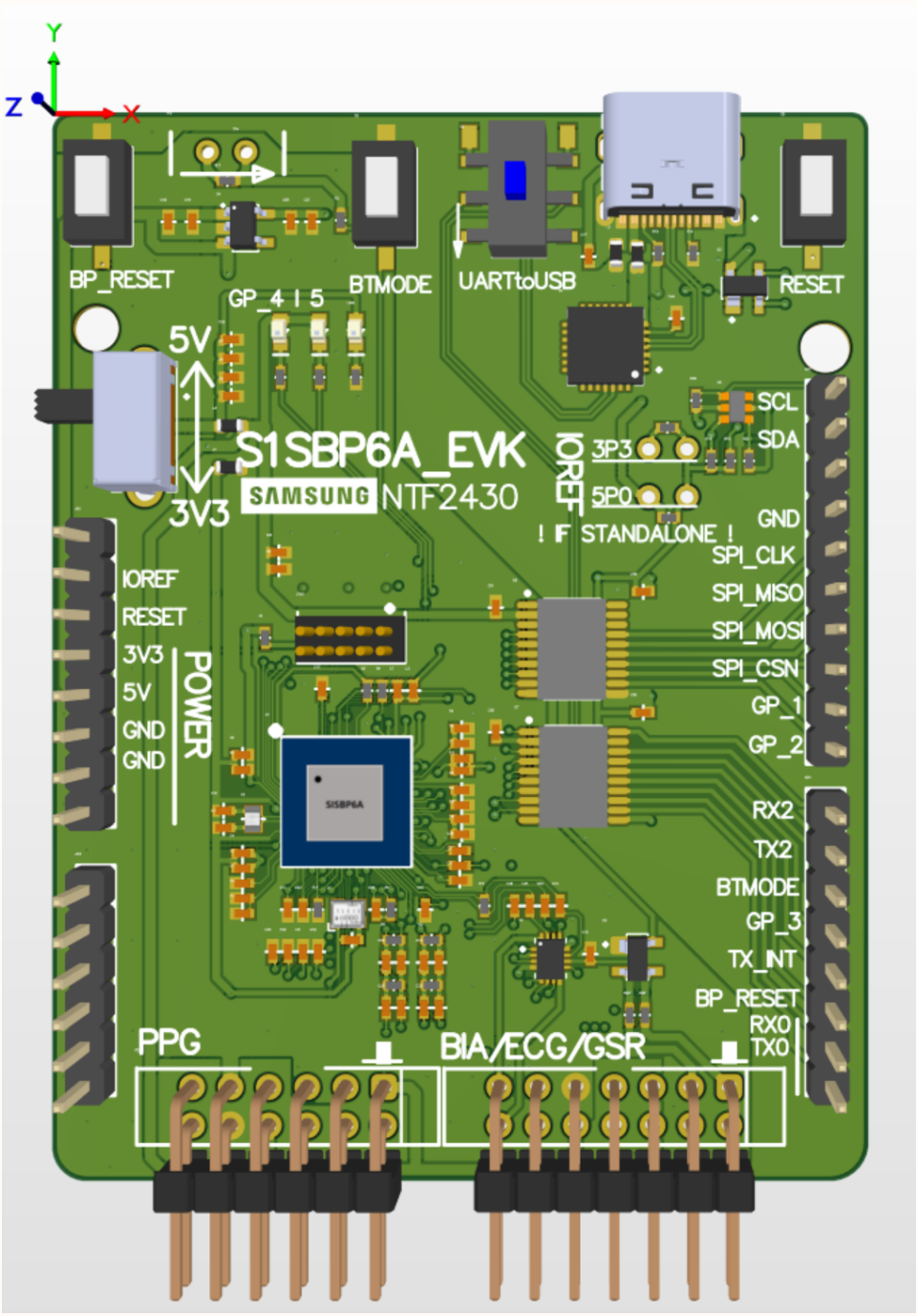

BP6A EVK
1. Stand alone
 - IOREF **점퍼 사용**
 - **레벨쉬프트 전압 레벨 설정됨**
2. Arduino Shield
 - IOREF **점퍼 제거 필수**
 - Arduino**의 전압으로 동작함**
3. BP **전류 체크**
 - **왼쪽 상단의 점퍼에 전류 메터 연결**
4. GP_1 ~ GP_3
 - BP6A IO
 - GP4 / GP5 : LED
5. Arduino Reset **및** BP6A Reset **적용**
6. GSR **직렬** 1M**저항 추가**
7. BP6A **위치를 하단으로 이동**

Modify		Change	Date	Drawn	Checked	Approved
	△					

SAMSUNG

Project: *BP6A_EVK_Shield.PrjPcb*
New Biz TF

Name: *BP6A_EVK_5.SchDoc*
Drawing No. | Rev No.
Date: 2024-09-11 Time: 오후 6:50:47 Sheet 5 of 5

Drawn	Checked	Approved

Confidential Drawing

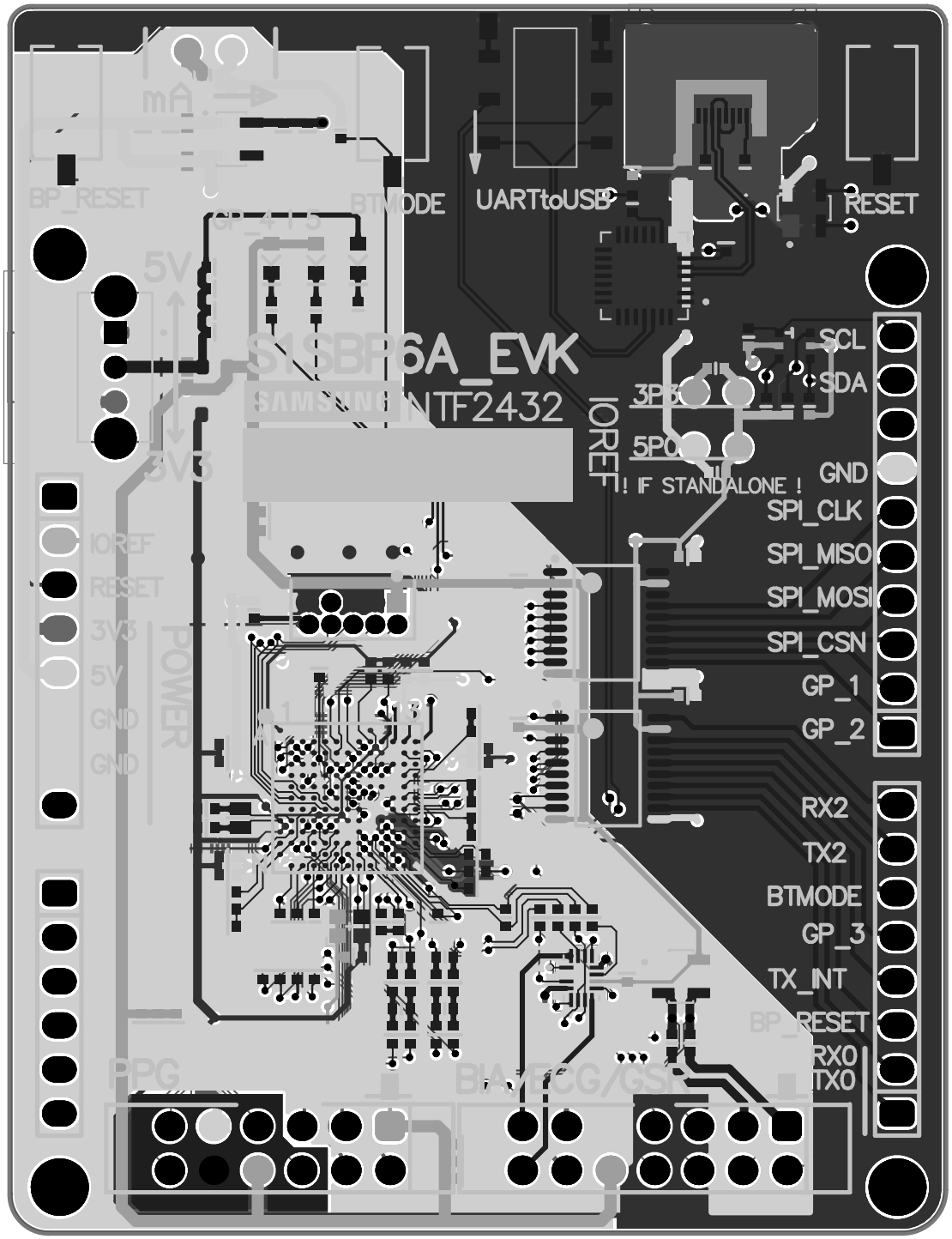
mA
BP_RESET
BTMODE
UARTtoUSB
RESET
5V
3V3
S1SBP6A_EVK
SAMSUNG NTF2432
IOREF
3P3
5P0
SCL
SDA
! IF STANDALONE !
GND
SPI_CLK
SPI_MISO
SPI_MOSI
SPI_CSN
GP_1
GP_2
RX2
TX2
BTMODE
GP_3
TX_INT
RESET
RX0
TX0
IOREF
RESET
3V3
5V
GND
GND
POWER
PPG
BIA/ECG/GSR

Bill of Material

<Parameter Board Name not found>

Report Date:	2024-09-11	
Print Date:	11-Sep-24	

#	Footprint	Comment	Designator	Quantity
1	PIN8	HEADER-8	AR1, AR4	2
2	PIN10	HEADER-10	AR2	1
3	PIN6	HEADER-6	AR3	1
4	MLCC_1005	4.7uF	C1, C2, C3, C5, C8, C29, C30, C31, C32, C43, C44, C45	12
5	MLCC_1005	0.1uF	C4, C6, C7, C9, C17, C21, C23, C25, C27, C28, C35,	15
6	MLCC_1005	1.0uF	C10, C11, C12, C13, C14, C15, C16, C20, C22, C24,	13
7	MLCC_1005	12pF/5%	C18, C19	2
8	MLCC_1005	1uF	C33, C34	2
9	MLCC_1005	47nF	C39, C41, C42	3
10	MLCC_1005	2.2uF	C48, C49, C50, C51, C52, C53, C54, C55, C56, C57,	20
11	TS3A44159RSVR	TS3A44159RSVR	D1	1
12	CP2102	CP2102	D2	1
13	SOT143	UDT14A05L03	D3, D8	2
14	AP7365-33WG-7	AP7365-33WG-7	D4	1
15	BSS138BKS_SOT363	BSS138BKS	D5	1
16	TX0108E	TXS0108E	D6, D7	2
17	JTAG10pin1.27	JTAG10pin1.27	JTAG	1
18	BEAD_0603	BLM18PG471SN1D	L1, L2, L3, L4	4
19	LED_1608	GREEN	LED1, LED3	2
20	LED_1608	RED	LED2	1
21	CX90B-16P	CX90B-16P	P1	1
22	HDR 6X2 Right	PPG	P2	1
23	HD7X2 RIGHT	BIA/ECG/GSR	P3	1
24	RES_1005	300K	R1, R2, R3, R4	4
25	RES_1005	51K/1%	R5, R9, R12	3
26	RES_1005	1.5K/1%	R6	1
27	RES_1005	1K	R7, R8, R16	3
28	RES_1005	300R/1%	R10	1
29	RES_1005	4.3K/1%	R11	1
30	RES_1005	75k	R13	1
31	RES_1005	5.1K	R14, R15, R26	3
32	RES_1005	0R	R17, R24	2
33	RES_1005	4.7K	R18, R19, R20, R21	4
34	RES_1005	1M	R22, R23	2
35	RES_1005	0R/NC	R25	1
36	micro_Tact_SW	micro_Tact_SW	S1, S2, S5	3
37	CTS-2235	slide SW	S3	1
38	SW_EG1247	SK-12D02	S4	1
39	TP_small_PAD	TP_smallPAD	TP1, TP2	2
40	TP_VIA	VIA	TP3, TP4, TP5, TP6, TP7, TP8	6
41	S1SBP6A - 065P	BP6A	U1	1
42	SMD_OSC_2016	4.096MHz OSC-2016	X1	1
43	SMD_XTAL_1610	Xtal	X2	1

Approved