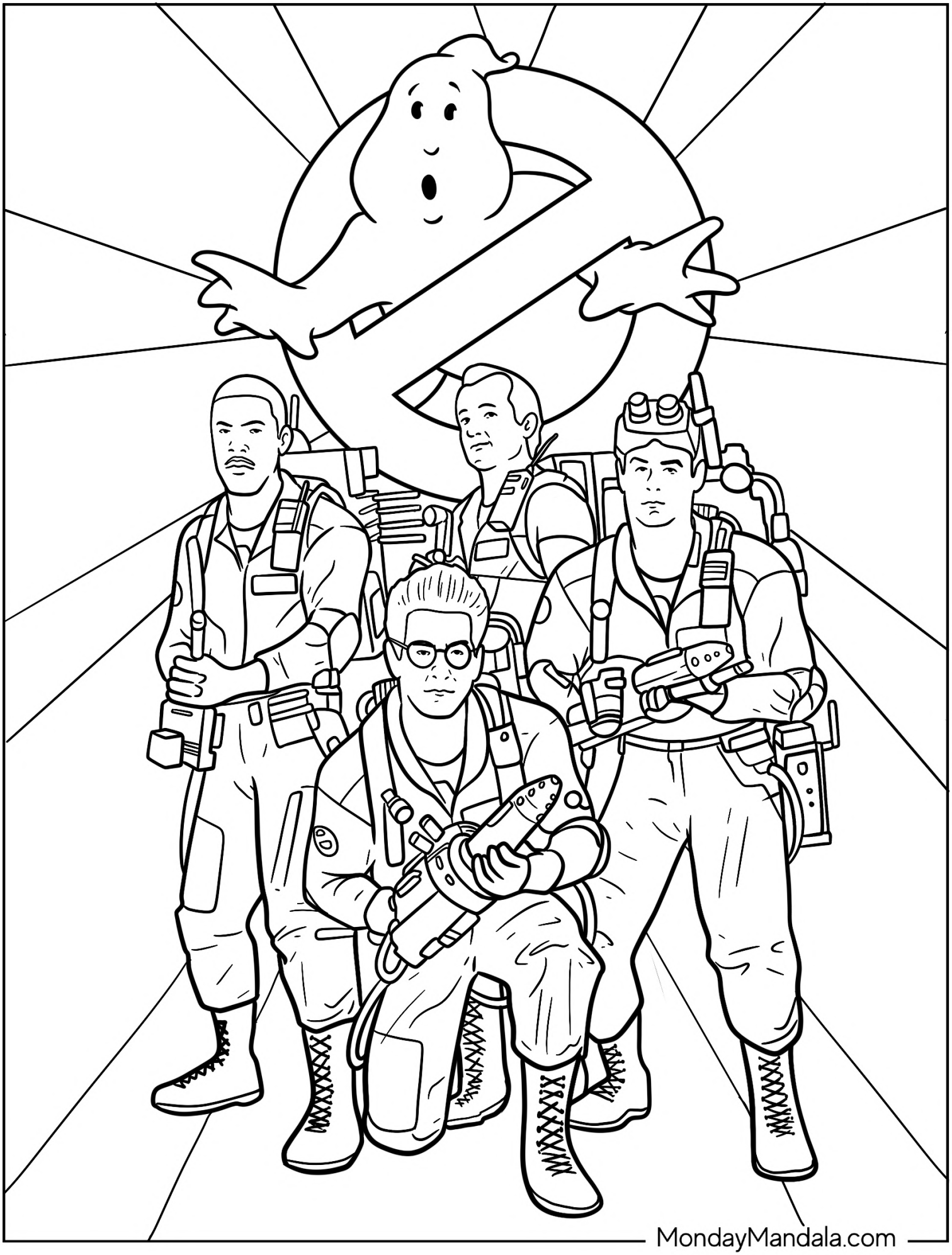
MondayMandala.com

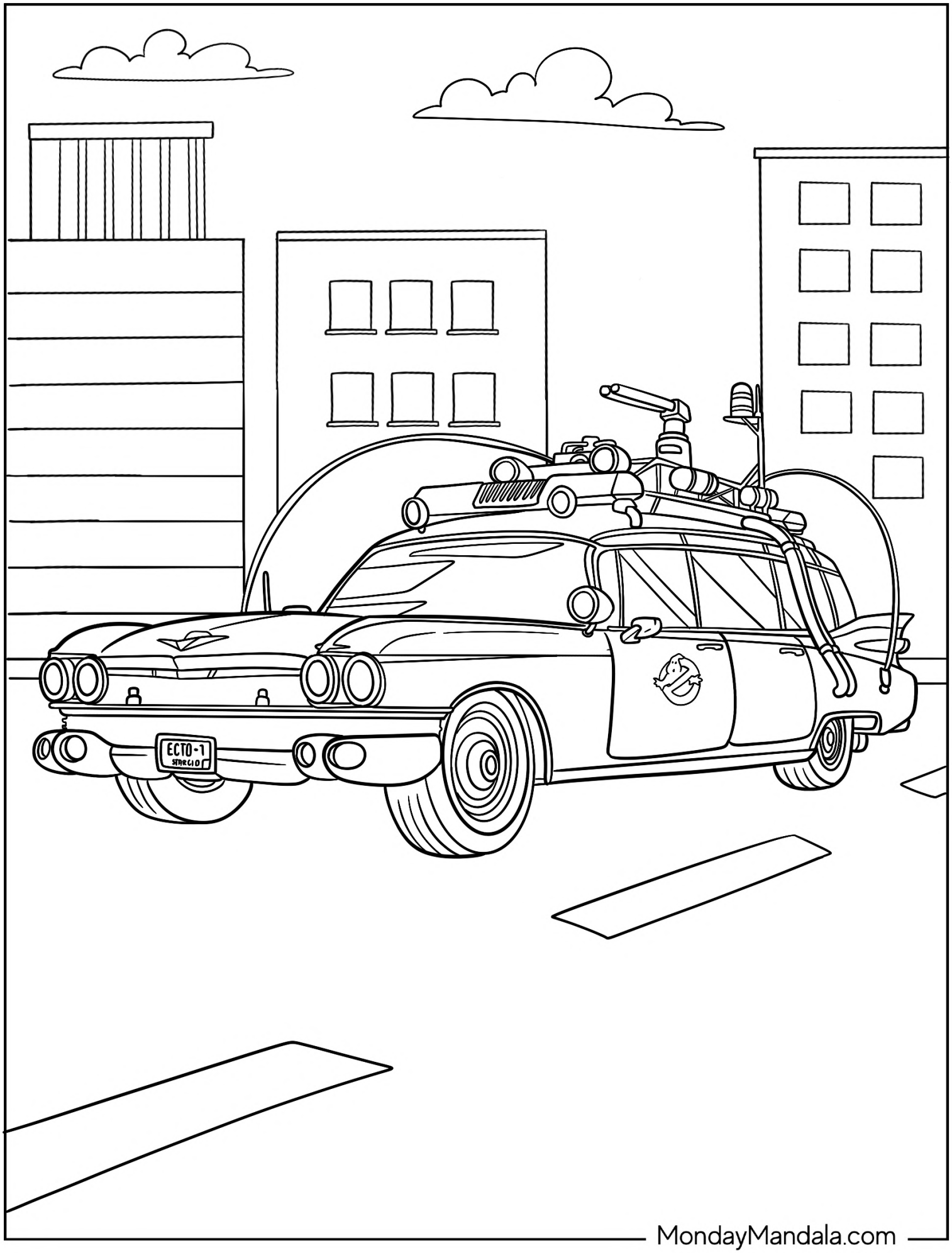

MondayMandala.com

MondayMandala.com

MondayMandala.com

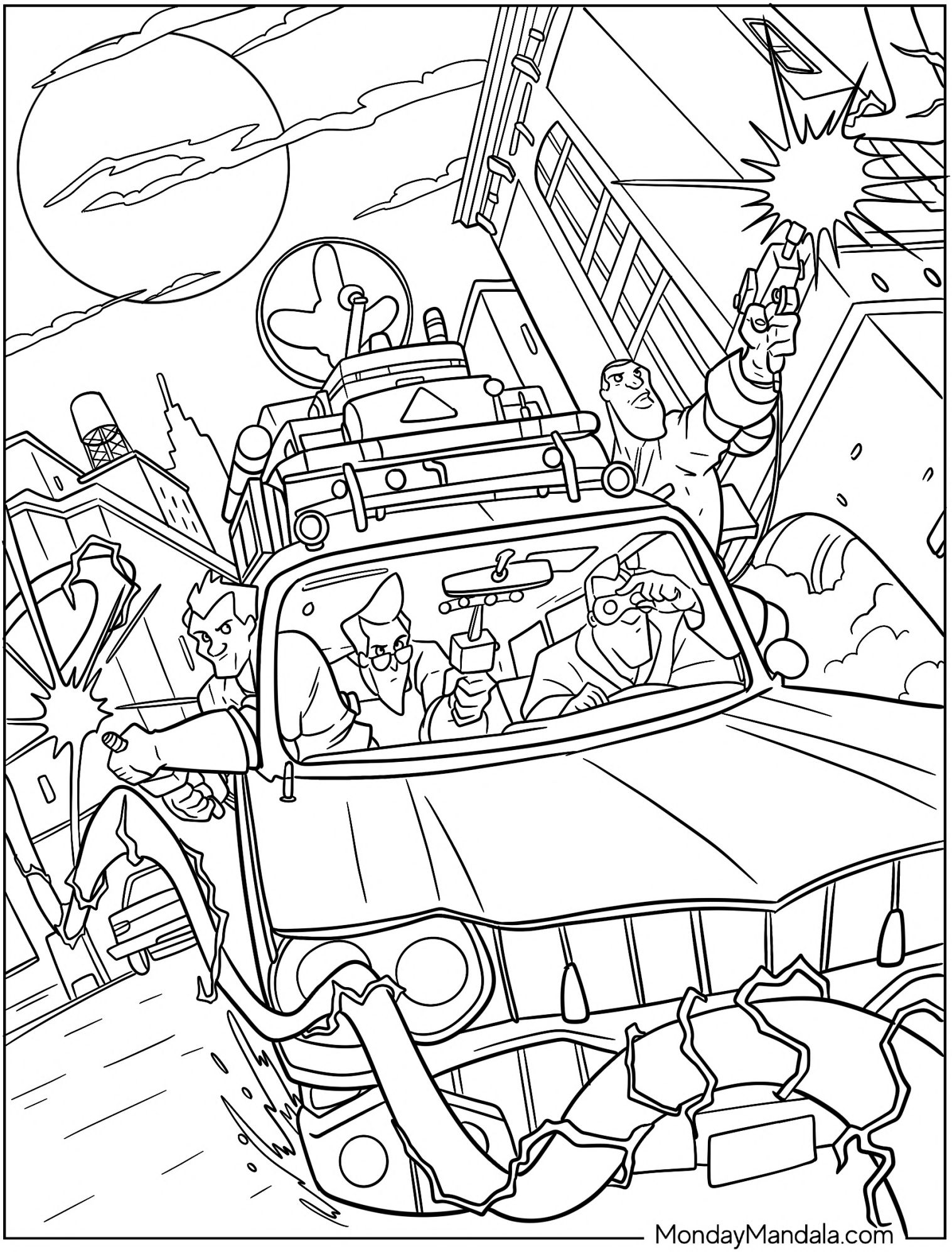
MondayMandala.com

VENKMAN
MondayMandala.com

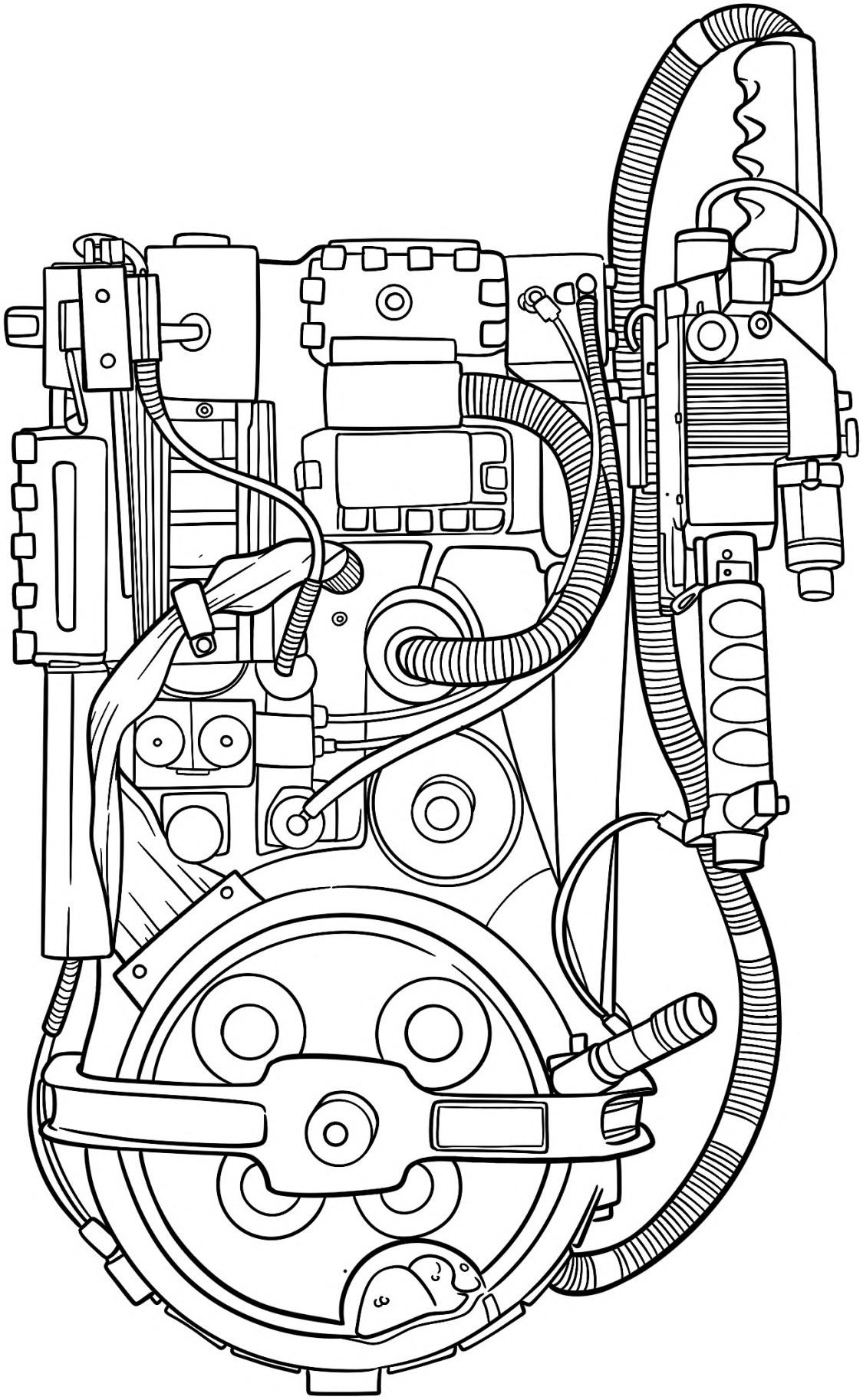

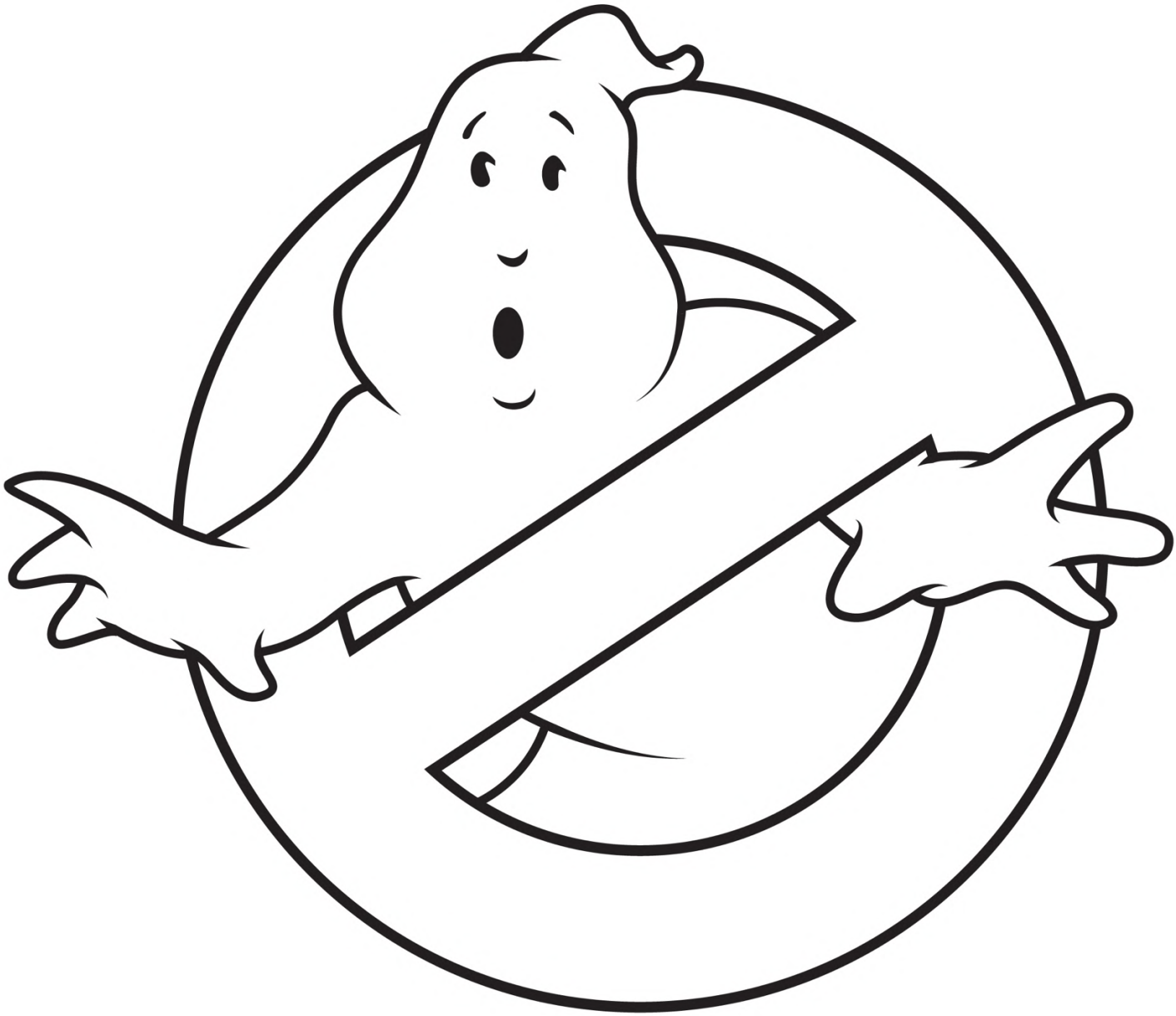

MondayMandala.com

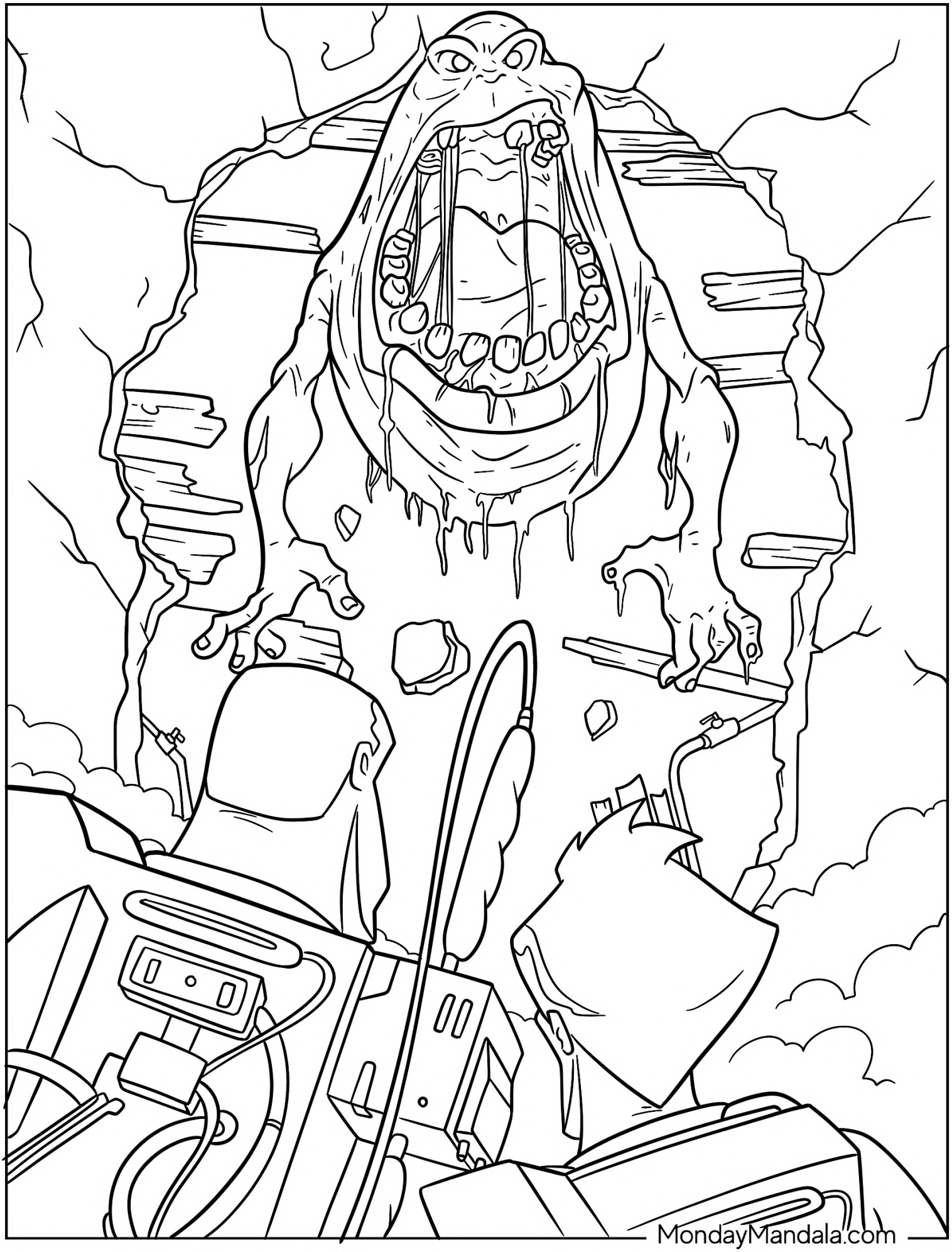
MondayMandala.com

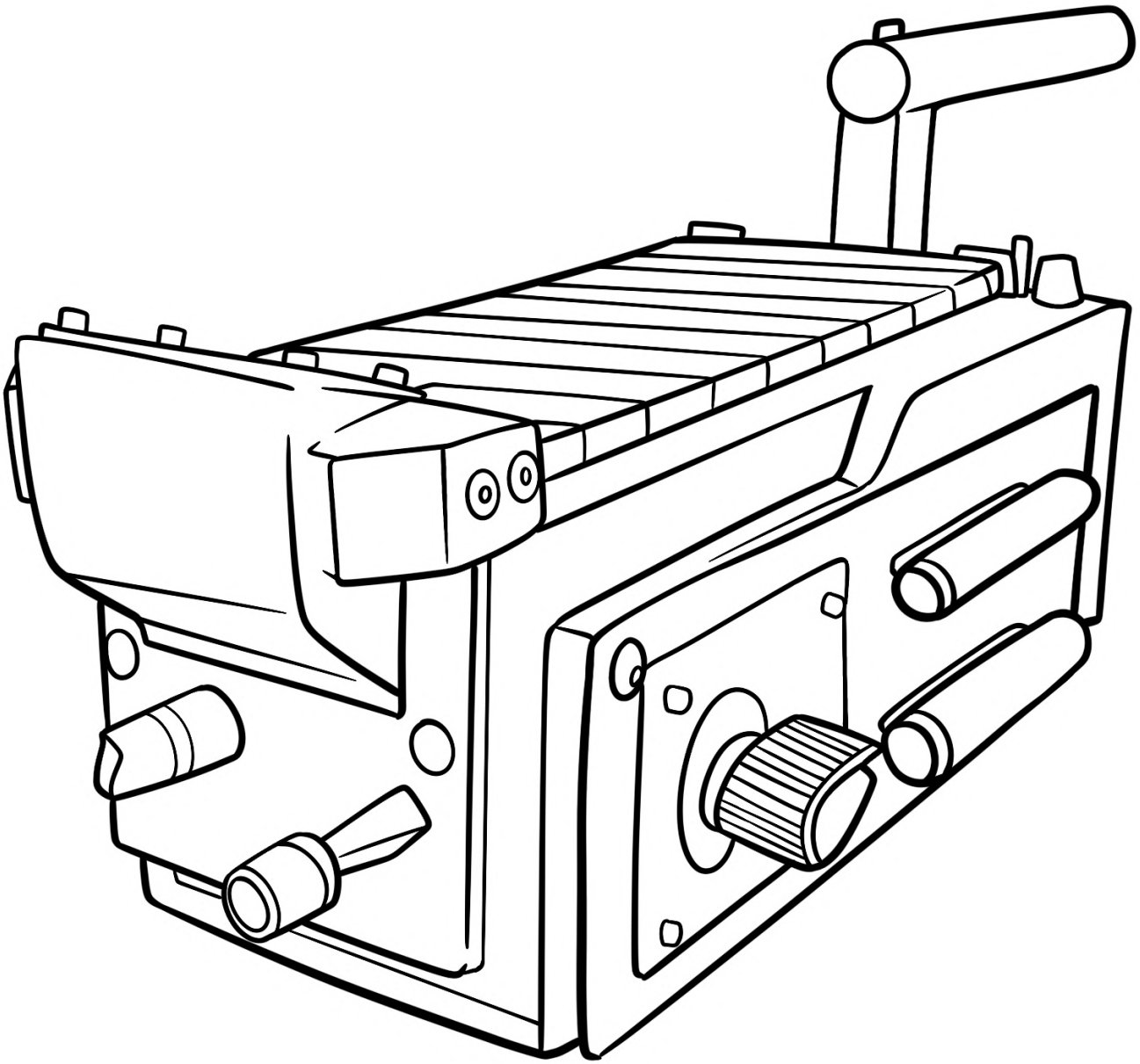

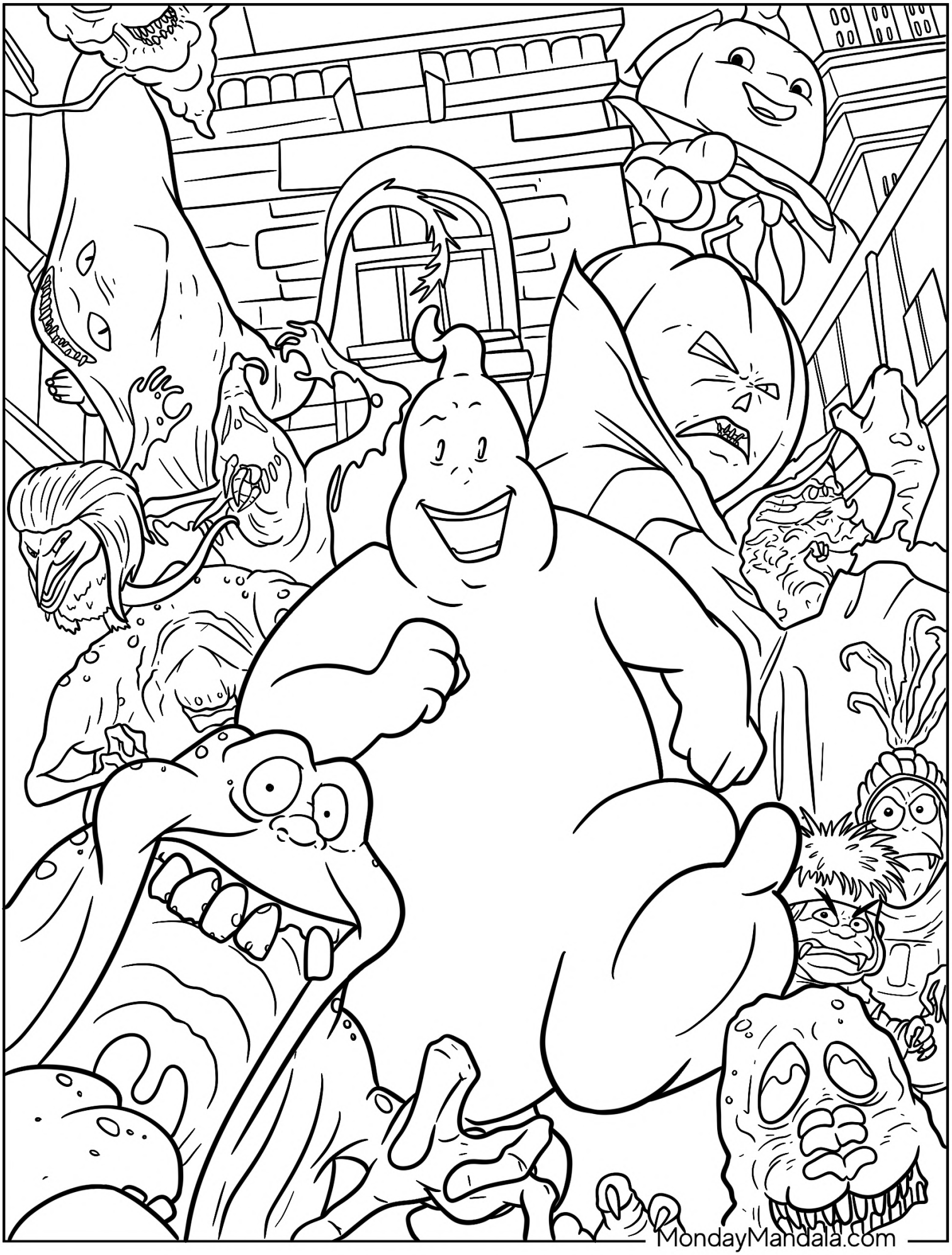
MondayMandala.com

ECTO-1
MondayMandala.com

MondayMandala.com

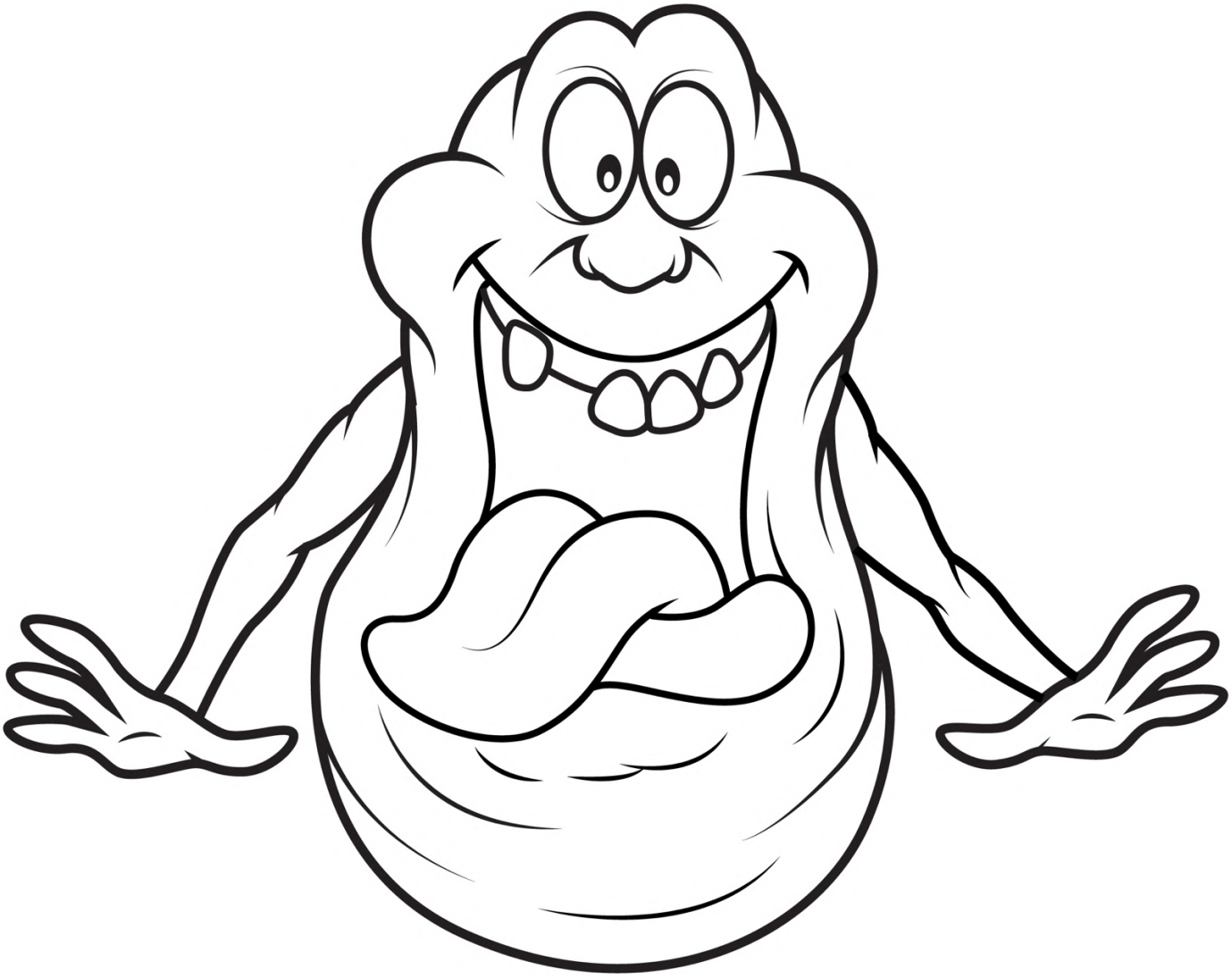

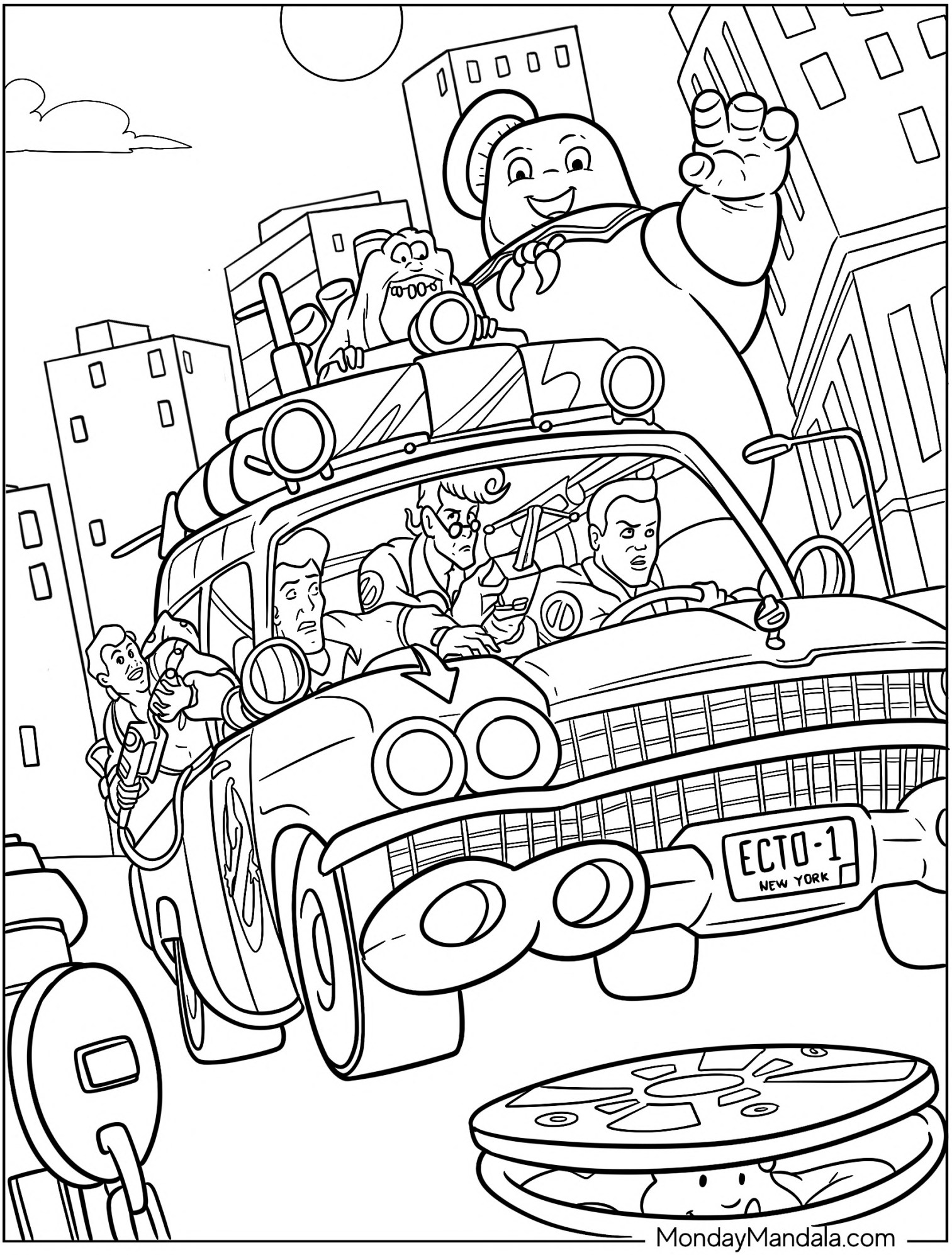

MondayMandala.com

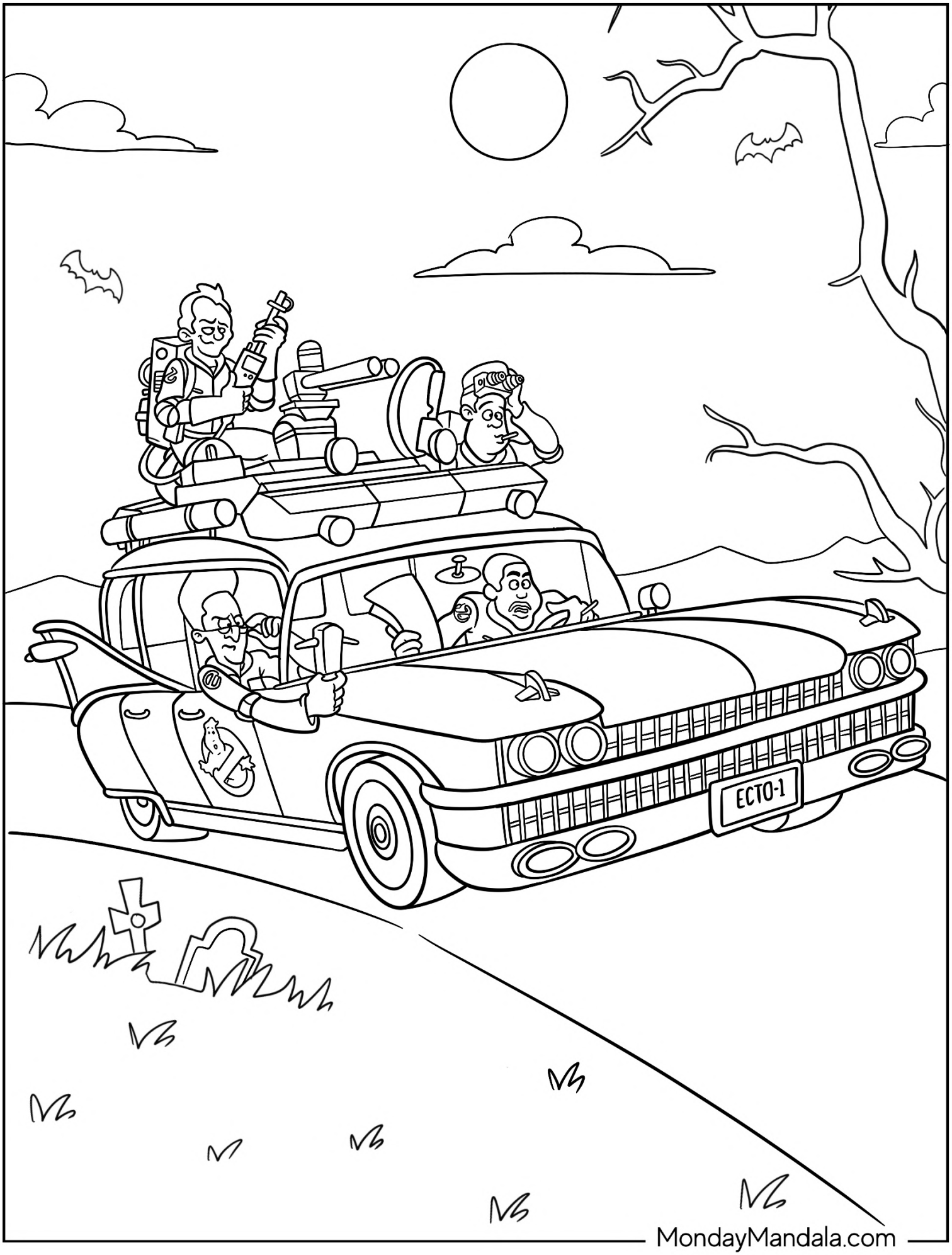
ECTO-1
MondayMandala.com