SAF-Mamba: Scale-Aware Mamba with Adaptive Frequency Filters for Cardiac Image Segmentation

Xinyi Luo, Shaoyu Wang*, Nuo Chen, Shiying Yang, Xiujin Shi
School of Information and Intelligence Science, Donghua University, Shanghai, China
*Corresponding author, Email: sywang@dhu.edu.cn

***Abstract*—Cardiac image segmentation is essential for detecting and treating cardiovascular diseases. Scale variation and boundary displacement remain key challenges affecting segmentation accuracy. Existing CNN-based and ViT-based methods struggle to address these issues. Inspired by Mamba, a state space model capable of modeling both global and local context, we propose SAF-Mamba, a Mamba-based cardiac segmentation model with scale-aware and adaptive filtering. Specifically, SAF-Mamba employs a multi-scale Visual State Space (MSVSS) block to capture scale-dependent variations in cardiac images, where multi-scale depth-wise convolutions and the VSS block provide complementary context for comprehensive pattern recognition. Furthermore, adaptive filter blocks (AFBs) preserve fine details, with filters generated by an adaptive filter generator (AF Generator) that dynamically modulates frequency components to enhance boundary sharpness. Experiments on the ACDC and M&Ms datasets yield Dice Similarity Coefficients of 92.21% and 88.43%, respectively, surpassing CNN-based, Transformer-based, and Mamba-based methods and demonstrating accurate and robust cardiac segmentation.**

***Index Terms*—Cardiac image segmentation, Mamba, state space model, frequency domain analysis**

I. Introduction

Cardiovascular diseases (CVDs) are the leading cause of death globally [**?**], making accurate diagnosis and treatment planning essential. Automatic segmentation of cardiac magnetic resonance (CMR) images enables efficient assessment of cardiac morphology and supports clinical diagnosis, treatment, and prognosis.

Deep learning has become the dominant approach for medical image segmentation. CNN-based models like U-Net [1] provide strong baselines but have limited receptive fields, while Transformer-based methods, such as Swin-Unet [2] and ViTs [3], incur high computational cost on high-resolution cardiac images. Recently, Mamba [4], derived from state space models (SSMs) [5], has shown promise by combining long-range dependency modeling with linear complexity. VMamba [6] extends Mamba to vision via the Visual State Space (VSS) block, mitigating direction-sensitivity between 1D sequences and 2D images. However, existing Mamba-based methods still struggle with challenges specific to cardiac segmentation, such as varying substructure scales and precise boundary delineation.

To address these issues, we propose SAF-Mamba, a scale-aware Mamba with adaptive frequency filters. We design the multi-scale Visual State Space (MSVSS) block, comprising parallel multi-scale depth-wise convolutions, a channel integration branch, and a calibration branch, to better capture scale variations. To preserve fine-grained features in the encoder, we introduce the Adaptive Filter Block (AFB) in skip connections, which enhances frequency components of multi-stage features. The filters adapt dynamically as high-, low-, or band-pass based on input features. In summary, the main contributions of this work are as follows:

- We propose SAF-Mamba, a scale-aware Mamba with multi-scale Visual State Space (MSVSS) blocks and Adaptive Filter Blocks (AFB).
- Experimental results show that SAF-Mamba enhances sensitivity to scale variations and boundary delineation on two challenging cardiac image datasets.

II. Method

A. Overview Architecture

As shown in Fig. 1, our proposed SAF-Mamba adopts a U-shaped hierarchical structure with skip connections. The encoder has four stages, beginning with patch embedding, which divides the input $I \in \mathbb{R}^{H\times W\times 1}$ into $\frac{H}{4} \times \frac{W}{4}$ non-overlapping patches and linearly projects them to 96 dimensions. These tokens pass through multiple MSVSS blocks for feature extraction, followed by patch merging layers that halve spatial dimensions and double channel depth, forming hierarchical representations. In the decoder, feature maps are upscaled via patch expanding and concatenated with outputs from corresponding AFBs in the first three encoder stages. Finally, patch expanding performs $4\times$ upsampling to produce a segmentation mask matching the input size.

B. Multi-Scale VSS Block

A persistent challenge in cardiac image segmentation lies in adapting to scale variations. Inspired by the fact that different convolution kernel sizes yield diverse receptive fields [7], we propose the MSVSS block, including parallel multi-scale depth-wise convolutions, a channel integration branch, and a calibration branch. Specifically, parallel depth-wise convolutions [8] extract multi-scale features, while the integration branch uses channel shuffle [9] to capture inter-channel dependencies. The calibration branch refines features overlooked during integration. To achieve both global context and local scale awareness, the two branches share a VSS block built on scale-aware feature maps, ensuring comprehensive representation with reduced complexity. As shown in Fig. 1(a), multi-

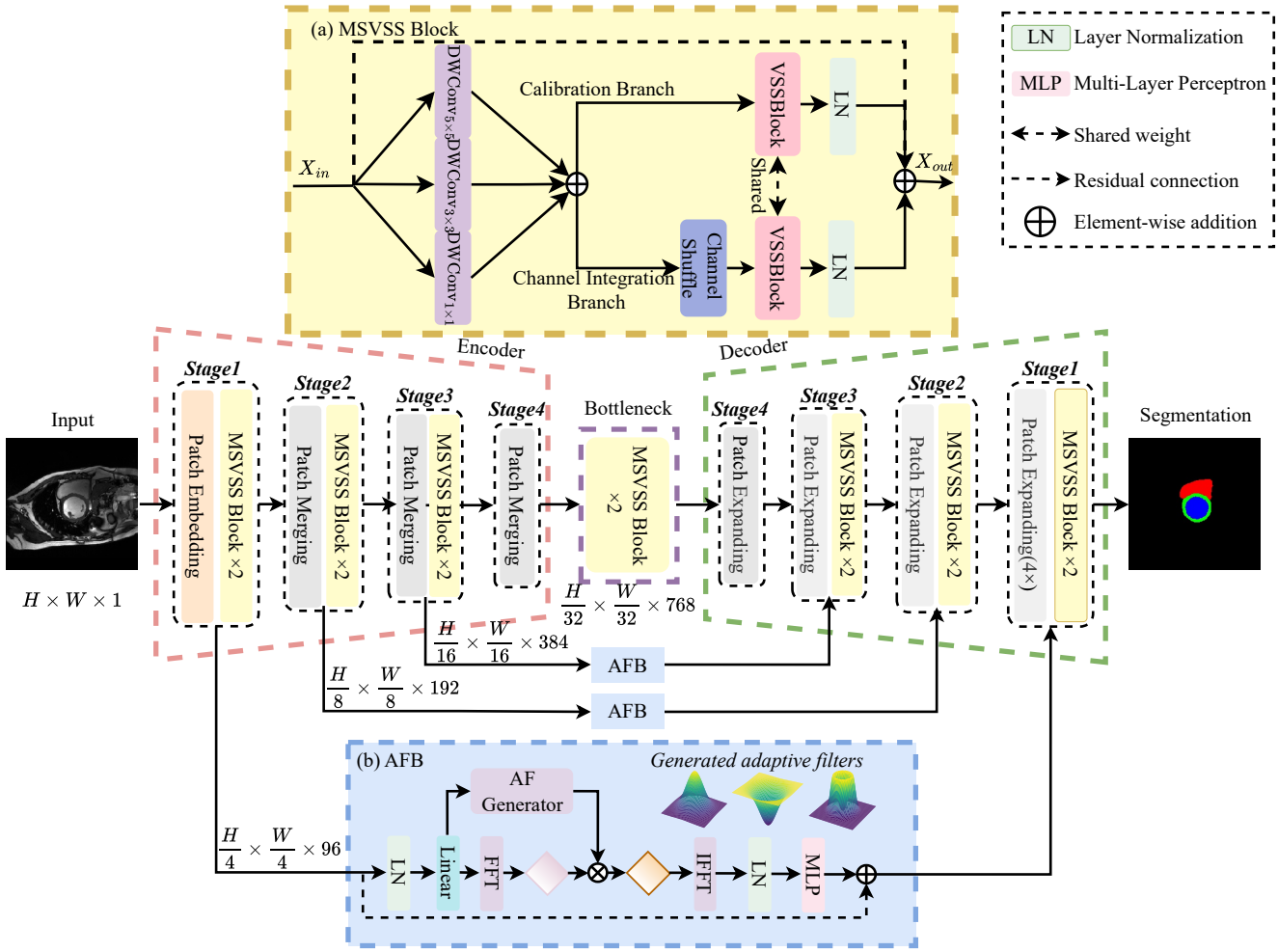

Fig. 1. Overview of SAF-Mamba. (a) An illustration of multi-scale Visual State Space (MSVSS) Block. (b) The illustration of the apative filter block (AFB).

scale features are derived from the input $\mathbf{X}_{in} \in \mathbb{R}^{H\times W\times C}$ as:

$$\mathbf{Y} = \text{DWConv}_{ks}(\mathbf{X}_{in}), \tag{1}$$

where $\text{DWConv}_{ks}(\cdot)$ denotes a depth-wise convolution with kernel size ks, and $\text{KS} = 1\times1, 3\times3, 5\times5$.

The multi-scale features are then fed into the channel integration and calibration branch to capture inter-channel dependencies and refine the extracted features, as described in the following equations:

$$\begin{aligned} \mathbf{Y}_1 &= \text{VSS}_{\text{shared}}(\text{Channel Shuffle}(\mathbf{Y})) \\ \mathbf{Y}_2 &= \text{VSS}_{\text{shared}}(\mathbf{Y}) \end{aligned} \tag{2}$$

Finally, the output $\mathbf{X}_{out} \in \mathbb{R}^{H\times W\times C}$ can be obtained through the sum of $\mathbf{Y}_1$, $\mathbf{Y}_2$ and residual connection from $\mathbf{X}_{in}$.

C. Adaptive Filter Block

Another issue affecting cardiac image segmentation is that the successive downsampling operations in hierarchical encoder may cause the loss of important spatial features (e.g., edges, shapes) in the shallow stages and semantic features in the deeper stages. We propose the Adaptive Filtering Block (AFB), which performs adaptive frequency filtering on encoder features via skip connections. As shown in Fig. 1(b), the spatial feature $\mathbf{X}i \in \mathbb{R}^{H\times W\times C}$ is normalized (LN), projected to $\hat{\mathbf{X}}i \in \mathbb{R}^{H\times W\times 2C}$ through a linear layer, and then transformed into the spectral domain. Following prior works [10], [11], we use the 2D discrete Fourier transform (DFT) to decompose spatial signals into frequency components.

To accelerate computation, the 2D fast Fourier transform (FFT) is used to map features into the frequency domain. Adaptive filters generated by the AF Generator enhance informative frequencies and suppress noise, after which the inverse FFT (IFFT) reconstructs refined spatial features:

$$A(\hat{\mathbf{X}}i) = \mathcal{F}^{-1}(\mathcal{F}(\hat{\mathbf{X}}i) \odot \mathbf{F}_c), \tag{3}$$

where $\odot$ denotes element-wise multiplication, $\mathcal{F}(\cdot)$ and $\mathcal{F}^{-1}(\cdot)$ represent 2D FFT/IFFT, and $\mathbf{F}c$ modulates the spectrum based on input characteristics. A multi-layer perceptron (MLP) further models cross-channel dependencies and refines features. The final output $\mathbf{X}_i^{out} \in \mathbb{R}^{H\times W\times C}$ is obtained by residual fusion, recovering spatial details.

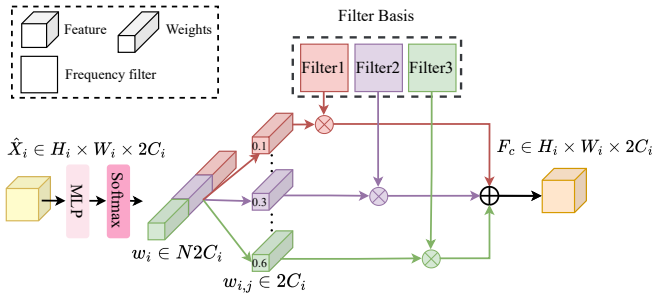

Fig. 2. Illustration of the Adaptive Filter Generator (AF Generator).

Adaptive Filter Generator: To generate adaptive filters, an MLP followed by softmax normalization produces channel-wise weights that linearly combine a filter basis $\mathbb{M} = \mathcal{M}_1, \ldots, \mathcal{M}_N$, where each $\mathcal{M}_i \in \mathbb{C}^{H \times \lceil \frac{W}{2} \rceil}$ is a randomly initialized complex parameter. Since each spectral channel captures distinct frequency responses, channel-wise filtering is applied, as shown in Fig. 2. The weights are computed as:

$$\mathbf{a} = \text{Softmax}\left(\text{MLP}\left(\frac{\sum_{h=1}^{\text{H}} \sum_{w=1}^{\text{W}} \mathbf{X}_{:,h,w}}{\text{HW}}\right)\right), \quad (4)$$

$$\mathbf{a} = (\alpha_1, \ldots, \alpha_{N2C})^\top, \quad (5)$$

where $\mathbf{a} \in \mathbb{R}^{N2C}$ weights the filter basis to generate adaptive filters:

$$\mathbf{F}_c = \sum_{i=1}^{N} \left(\frac{e^{\alpha_{c,i}}}{\sum_{n=1}^{N} e^{\alpha_{c,n}}}\right) \mathcal{M}_i \quad (6)$$

where $\alpha c, i$ is the i-th element of α for the c-th group. The vector α is divided into N segments of length $2C$. In our model, we set $N = 3$, matching the dimension of $\mathbb{M}$. A larger N increases computational cost, while a smaller N (e.g., $N = 1$) degenerates filters into fixed ones.

III. Experiments

A. Dataset

Experiments were conducted on the ACDC [12] and M&Ms [13] datasets following [14] and [15], respectively. The ACDC dataset contains 200 annotated cardiac MRI scans from 100 patients, with labels for the right ventricle (RV), myocardium (MYO), and left ventricle (LV). Data are split into 70 training (1,930 slices), 10 validation, and 20 testing cases. The M&Ms dataset includes 375 patients and 7334 annotated slices from four MRI vendors: A) Siemens, B) Philips, C) GE, and D) Canon. The training set comprises 150 annotated scans, while 25 unannotated scans from vendor C are excluded. The test set contains 200 cases (50 from each vendor).

B. Implementation Details

We conduct experiments on a single 16GB NVIDIA RTX 3090 GPU. The input images are resized to 224×224 and 256×256 for ACDC and M&Ms, respectively. The number of training iterations is 15,000 for ACDC and 10,000 for M&Ms, with a batch size of 16. Training uses PyTorch 2.1.1 with SGD (lr=0.01, momentum=0.9) and combines cross-entropy and Dice losses, and evaluation employs DSC and HD95 metrics.

TABLE I
Comparative experimental results of ACDC dataset.

Methods	DSC(%)↑				HD95 (mm)↓
	RV	MYO	LV	Avg	
U-Net [1]	85.01	86.35	94.29	88.55	2.39
Swin-Unet [2]	85.62	84.49	94.03	88.05	2.08
TransUNet [16]	86.87	84.22	94.12	88.40	1.65
HiFormer [17]	90.51	89.27	95.68	91.82	1.12
TransCASCADE [18]	89.07	88.90	94.45	90.81	1.29
PVT-CASCADE [18]	90.15	**89.97**	95.05	91.72	1.16
Swin-UMamba [19]	85.12	83.73	93.81	87.55	2.47
UU-mamba [20]	90.23	89.43	95.60	91.75	1.20
Mamba-UNet [14]	90.25	88.39	94.27	90.97	1.81
SAF-Mamba(ours)	**90.87**	89.42	**96.34**	**92.21**	**1.05**

TABLE II
Comparative experimental results of M&Ms dataset.

Methods	DSC(%)↑					HD95 (mm)↓
	A	B	C	D	Avg	
U-Net [1]	87.65	84.80	82.69	83.79	84.73	15.85
Swin-Unet [2]	86.27	84.52	83.11	84.95	84.71	13.66
TransUNet [16]	87.69	85.82	84.25	85.53	85.82	13.30
HiFormer [17]	87.90	83.94	83.25	83.86	84.74	12.78
TransCASCADE [18]	85.92	84.23	82.93	84.43	84.38	13.91
PVT-CASCADE [18]	88.71	87.12	85.36	87.81	87.25	12.60
Swin-UMamba [19]	87.88	86.15	83.67	85.28	85.75	13.29
UU-mamba [20]	88.15	86.90	85.22	86.79	86.77	13.09
Mamba-UNet [14]	88.32	86.48	83.11	86.98	86.22	14.05
SAF-Mamba(ours)	**89.16**	**88.79**	**86.83**	**88.92**	**88.43**	**12.14**

C. Comparison Experiments

Comparison with State-of-the-arts: We compare SAF-Mamba with nine state-of-the-art (SOTA) methods, including CNN-, Transformer-, and Mamba-based approaches. As shown in Table I, SAF-Mamba achieves the highest average DSC (92.21%) and the lowest HD95 (1.05 mm) on the ACDC dataset, particularly improving RV segmentation and boundary accuracy. On the M&Ms dataset (Table II), it also attains the best mean DSC (88.43%) and HD95 (12.14), demonstrating strong robustness and cross-vendor generalization.

Visual Comparison: Qualitative examples in Fig. 3 show that SAF-Mamba produces smoother and more accurate contours than other methods, especially in low-contrast or irregular regions.

Visualization of Adaptive Filter Basis: Fig. 4 illustrates that the learned filters exhibit diverse high-, low-, and band-pass patterns across stages, validating the adaptive frequency modulation capability of AFB.

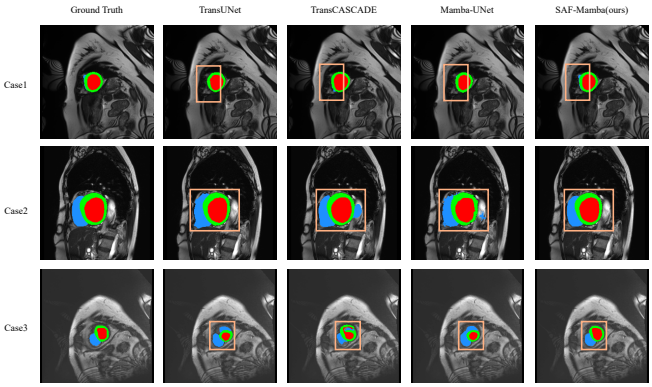

Fig. 3. The visualization of segmentation results on the ACDC dataset.

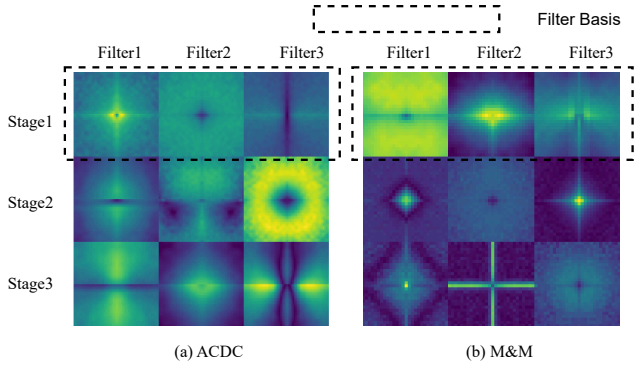

Fig. 4. The adaptive filter bases in AFBs learned from (a) the ACDC dataset and (b) the M&M dataset.

TABLE III
THE RESULTS OF ABLATION STUDIES CONDUCTED ON ACDC DATASET.

Methods	MSVSS	AFB	DSC(%)↑	HD95(mm)↓
SAF-Mamba(ours)	✗	✗	90.97	1.81
	✓	✗	91.25	1.47
	✗	✓	91.54	1.42
	✓	✓	92.21	1.05

D. Ablation Studies

We conduct ablation experiments on the ACDC dataset to evaluate each module's contribution. Removing either MSVSS or AFB reduces accuracy, indicating their complementary roles. When both modules are integrated, SAF-Mamba achieves the highest DSC of 92.21% and HD95 of 1.05 mm, validating their joint effectiveness.

IV. Conclusion

In this paper, we propose SAF-Mamba, a novel cardiac image segmentation method addressing two main challenges: scale variation and boundary displacement. The proposed dual-branch architecture effectively captures multi-scale information, while adaptive filtering enhances frequency-domain details. Experiments on the two public datasets demonstrate that our method enables more efficient and accurate computer-aided diagnosis, particularly in cardiovascular disease detection and intervention.

References

[1] O. Ronneberger, P. Fischer *et al.*, "U-net: Convolutional networks for biomedical image segmentation," in *Medical image computing and computer-assisted intervention–MICCAI 2015: 18th international conference, Munich, Germany, October 5-9, 2015, proceedings, part III 18*. Springer, 2015, pp. 234–241.

[2] H. Cao, Y. Wang *et al.*, "Swin-unet: Unet-like pure transformer for medical image segmentation," in *European conference on computer vision*. Springer, 2022, pp. 205–218.

[3] A. Dosovitskiy, L. Beyer *et al.*, "An image is worth 16x16 words: Transformers for image recognition at scale," *arXiv preprint arXiv:2010.11929*, 2021.

[4] A. Gu and T. Dao, "Mamba: Linear-time sequence modeling with selective state spaces," *arXiv preprint arXiv:2312.00752*, 2023.

[5] A. Gu, K. Goel *et al.*, "Efficiently modeling long sequences with structured state spaces," *arXiv preprint arXiv:2111.00396*, 2022.

[6] Y. Liu, Y. Tian *et al.*, "Vmamba: Visual state space model," *arXiv preprint arXiv:2401.10166*, 2024.

[7] M. Ma, C. Xia *et al.*, "Boosting broader receptive fields for salient object detection," *IEEE Transactions on Image Processing*, vol. 32, pp. 1026–1038, 2023.

[8] M. M. Rahman, M. Munir *et al.*, "Emcad: Efficient multi-scale convolutional attention decoding for medical image segmentation," in *Proceedings of the IEEE/CVF Conference on Computer Vision and Pattern Recognition*, 2024, pp. 11 769–11 779.

[9] X. Zhang, X. Zhou *et al.*, "Shufflenet: An extremely efficient convolutional neural network for mobile devices," in *Proceedings of the IEEE conference on computer vision and pattern recognition*, 2018, pp. 6848–6856.

[10] Y. Tatsunami and M. Taki, "Fft-based dynamic token mixer for vision," in *Proceedings of the AAAI Conference on Artificial Intelligence*, vol. 38, no. 14, 2024, pp. 15 328–15 336.

[11] A. Chang, J. Zeng *et al.*, "Em-net: Efficient channel and frequency learning with mamba for 3d medical image segmentation," in *International Conference on Medical Image Computing and Computer-Assisted Intervention*. Springer, 2024, pp. 266–275.

[12] O. Bernard, A. Lalande *et al.*, "Deep learning techniques for automatic mri cardiac multi-structures segmentation and diagnosis: Is the problem solved?" *IEEE Transactions on Medical Imaging*, vol. 37, no. 11, pp. 2514–2525, Nov. 2018.

[13] V. M. Campello, P. Gkontra *et al.*, "Multi-centre, multi-vendor and multi-disease cardiac segmentation: The m&ms challenge," *IEEE Transactions on Medical Imaging*, vol. 40, no. 12, pp. 3543–3554, Dec. 2021.

[14] Z. Wang, J.-Q. Zheng *et al.*, "Mamba-unet: Unet-like pure visual mamba for medical image segmentation," *arXiv preprint arXiv:2402.05079*, 2024.

[15] Y. Gao, M. Zhou *et al.*, "Utnet: a hybrid transformer architecture for medical image segmentation," in *Medical Image Computing and Computer Assisted Intervention–MICCAI 2021: 24th International Conference, Strasbourg, France, September 27–October 1, 2021, Proceedings, Part III 24*. Springer, 2021, pp. 61–71.

[16] J. Chen, Y. Lu *et al.*, "Transunet: Transformers make strong encoders for medical image segmentation," *arXiv preprint arXiv:2102.04306*, 2021.

[17] M. Heidari, A. Kazerouni *et al.*, "Hiformer: Hierarchical multi-scale representations using transformers for medical image segmentation," in *Proceedings of the IEEE/CVF winter conference on applications of computer vision*, 2023, pp. 6202–6212.

[18] M. M. Rahman and R. Marculescu, "Medical image segmentation via cascaded attention decoding," in *2023 IEEE/CVF Winter Conference on Applications of Computer Vision (WACV)*. Waikoloa, HI, USA: IEEE, Jan. 2023, pp. 6211–6220.

[19] J. Liu, H. Yang *et al.*, "Swin-umamba: Mamba-based unet with imagenet-based pretraining," in *International Conference on Medical Image Computing and Computer-Assisted Intervention*. Springer, 2024, pp. 615–625.

[20] T. Y. Tsai, L. Lin *et al.*, "Uu-mamba: Uncertainty-aware u-mamba for cardiac image segmentation," *arXiv preprint arXiv:2405.17496*, 2024.