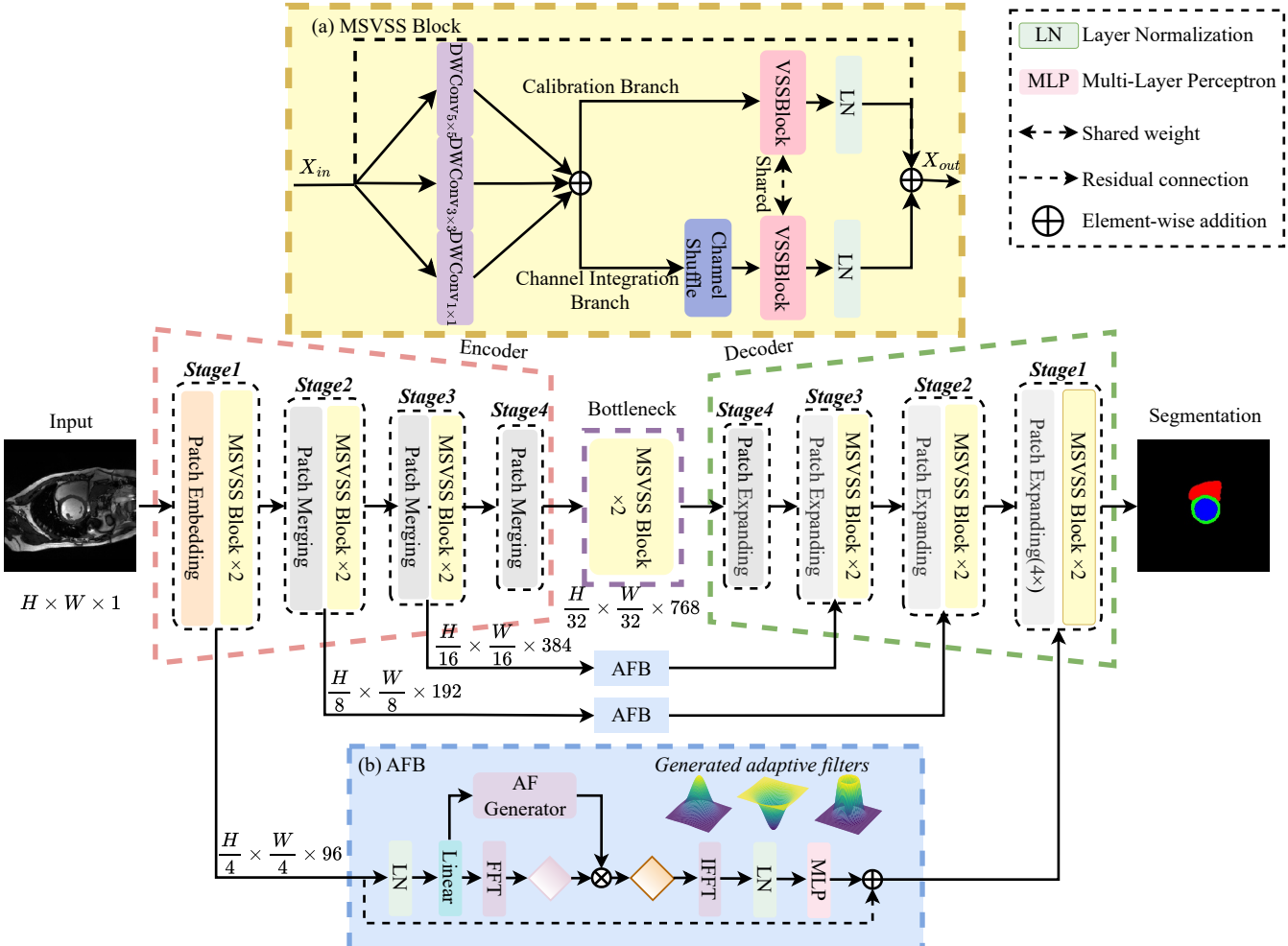
(a) MSVSS Block
X_{in}
DWConv5×5
DWConv3×3
DWConv1×1
Calibration Branch
Channel Integration Branch
Channel Shuffle
VSSBlock
Shared
VSSBlock
LN
LN
X_{out}
LN Layer Normalization
MLP Multi-Layer Perceptron
Shared weight
Residual connection
Element-wise addition
Encoder
Decoder
Input
$H \times W \times 1$
Stage1
Patch Embedding
MSVSS Block ×2
Stage2
Patch Merging
MSVSS Block ×2
Stage3
Patch Merging
MSVSS Block ×2
Stage4
Patch Merging
Bottleneck
MSVSS Block ×2
$\frac{H}{32} \times \frac{W}{32} \times 768$
Stage4
Patch Expanding
Stage3
Patch Expanding
MSVSS Block ×2
Stage2
Patch Expanding
MSVSS Block ×2
Stage1
Patch Expanding(4×)
MSVSS Block ×2
Segmentation
$\frac{H}{16} \times \frac{W}{16} \times 384$
$\frac{H}{8} \times \frac{W}{8} \times 192$
AFB
AFB
(b) AFB
Generated adaptive filters
AF Generator
$\frac{H}{4} \times \frac{W}{4} \times 96$
LN
Linear
FFT
IFFT
LN
MLP