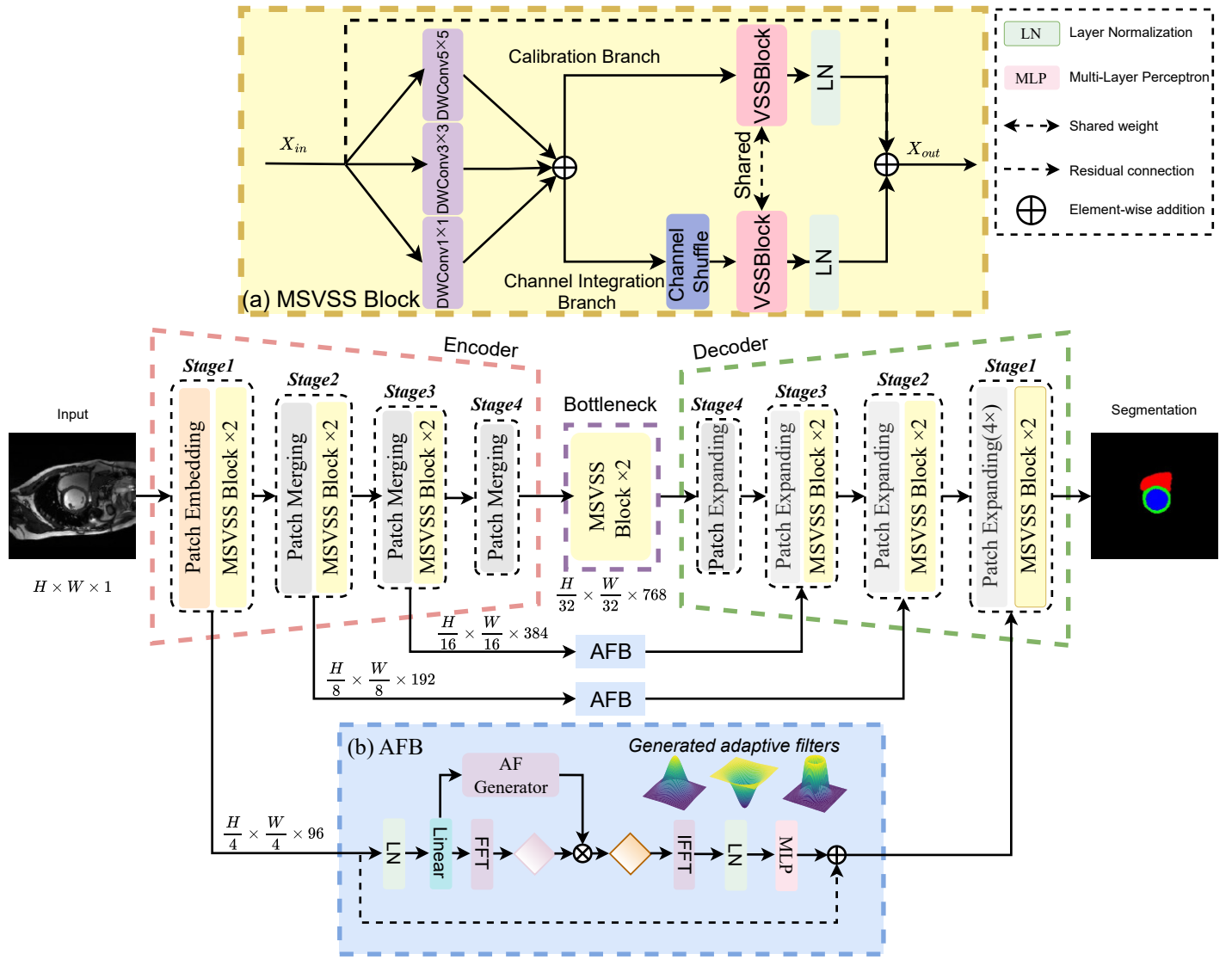
(a) MSVSS Block
$X_{in}$
DWConv1×1
DWConv3×3
DWConv5×5
Calibration Branch
Channel Integration Branch
Channel Shuffle
VSSBlock
Shared
VSSBlock
LN
LN
$X_{out}$
LN Layer Normalization
MLP Multi-Layer Perceptron
Shared weight
Residual connection
Element-wise addition
Input
$H \times W \times 1$
Encoder
Stage1
Patch Embedding
MSVSS Block ×2
Stage2
Patch Merging
MSVSS Block ×2
Stage3
Patch Merging
MSVSS Block ×2
Stage4
Patch Merging
Bottleneck
MSVSS Block ×2
$\frac{H}{32} \times \frac{W}{32} \times 768$
Decoder
Stage4
Patch Expanding
Stage3
Patch Expanding
MSVSS Block ×2
Stage2
Patch Expanding
MSVSS Block ×2
Stage1
Patch Expanding(4×)
MSVSS Block ×2
Segmentation
$\frac{H}{16} \times \frac{W}{16} \times 384$
AFB
$\frac{H}{8} \times \frac{W}{8} \times 192$
AFB
$\frac{H}{4} \times \frac{W}{4} \times 96$
(b) AFB
AF Generator
Generated adaptive filters
LN
Linear
FFT
IFFT
LN
MLP