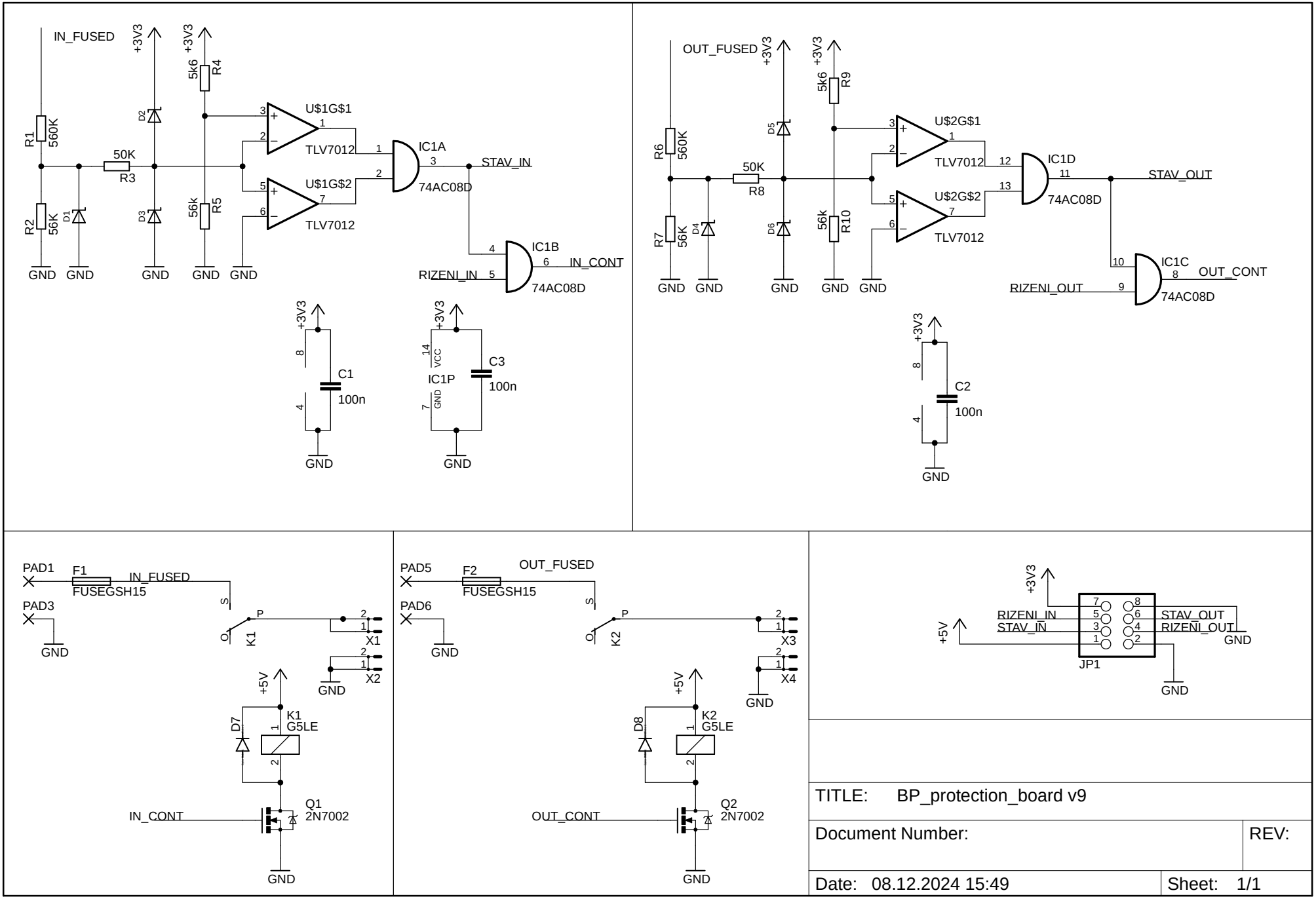

TITLE: BP_protection_board v9

Document Number:

REV:

Date: 08.12.2024 15:49

Sheet: 1/1