Radxa NX4 IO Board schematic

V1.11

Index

01 Cover
02 Index
03_Block diagram
04 SODIMM connector 1_3
05 SODIMM connector 2_3
06_SODIMM connector 3_3
07_DC Jack and DCDC
08 Fan Debug and EEPROM
09_1V8 LDO & 3V3 AO Rails
10 TYPE_C
11 USB3.1 x4 HUB
12 USB3.1 Type-A x2 (A)
13_USB3.1 Type-A x2 (B)
14 BUTTON MCU
15 Gigabit_Ethernet
16 HDMI&DP
17 CAM Connector
18_40Pin_GPIO_expansion_heade
19 KEY_M_X4
20 KEY_M_X2
21 KEY_E

Block diagram

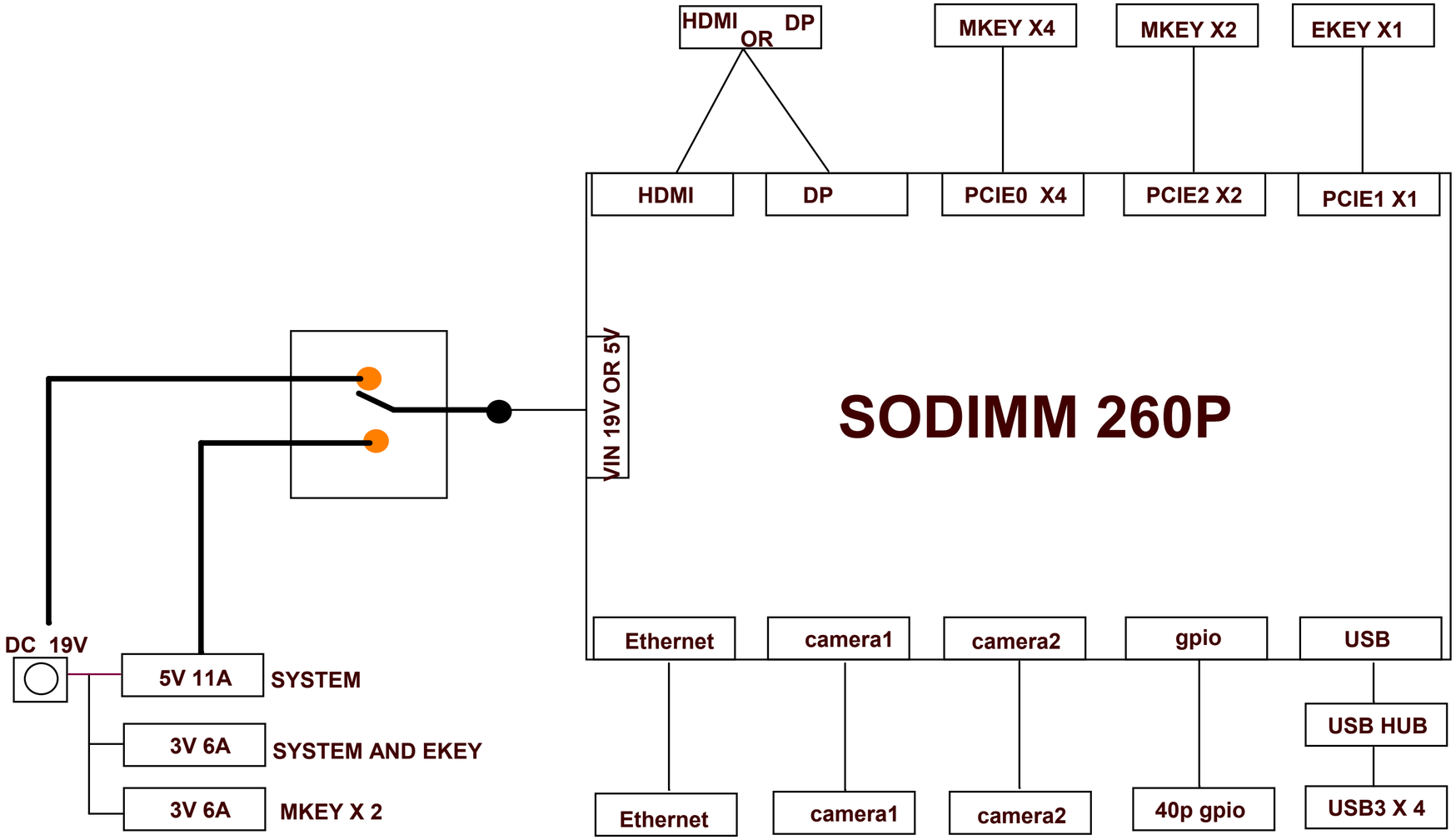

Size A4	Title: NX4 IO Board	REV V1.11
	Page Name: 03_Block diagram	
Date: Thursday, December 04, 2025	Sheet 3 of 21	

UART, I2C, CAN and GPIOs

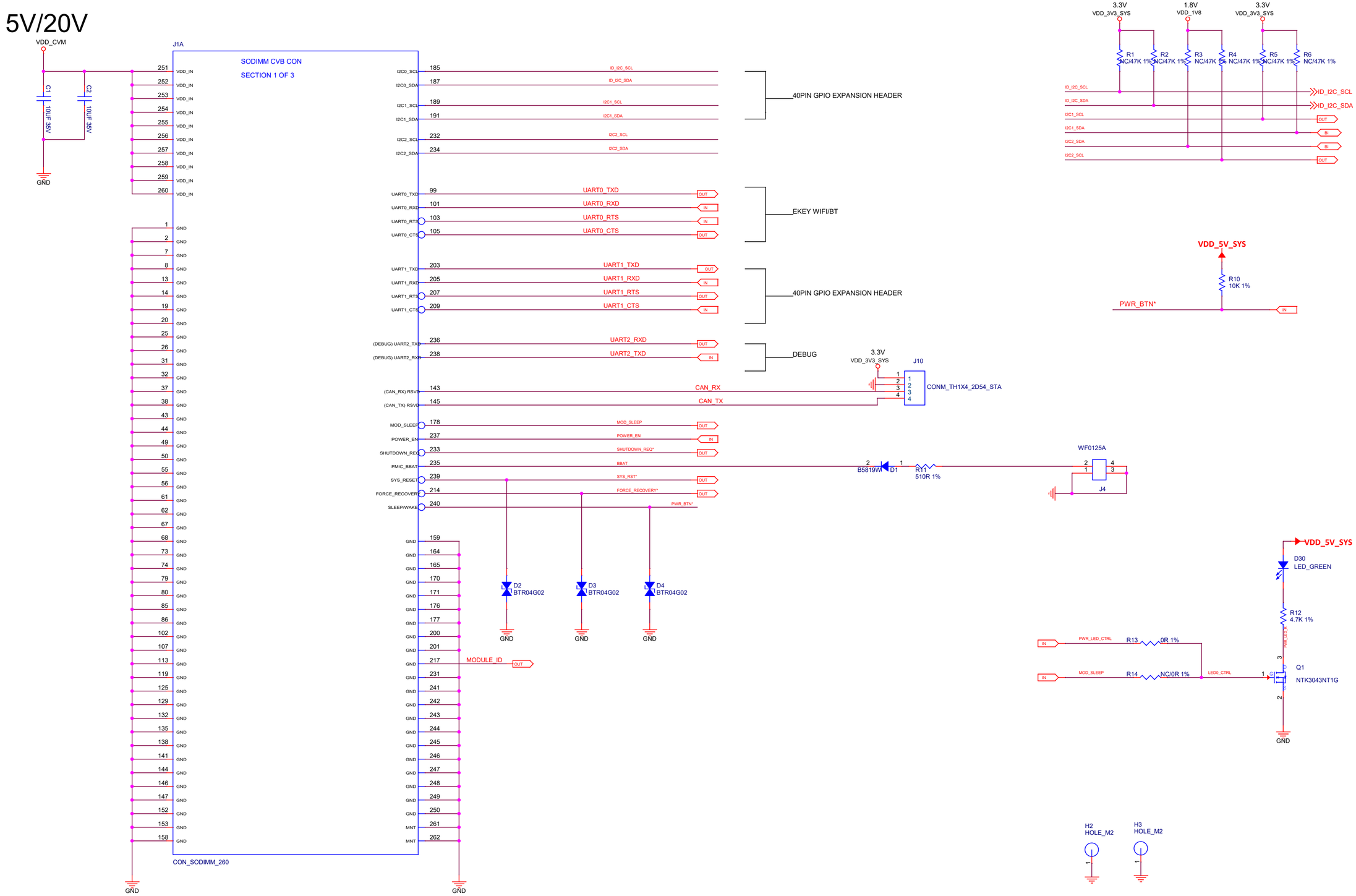

Size	Title:	C200	REV
A2	Page Name:	04_SODIMM connector 1_3	V1.11
Date: Thursday, December 04, 2025	Sheet 4 of 21		

GPIOs, USB2.0, I2S, SPI, GBe and CSI

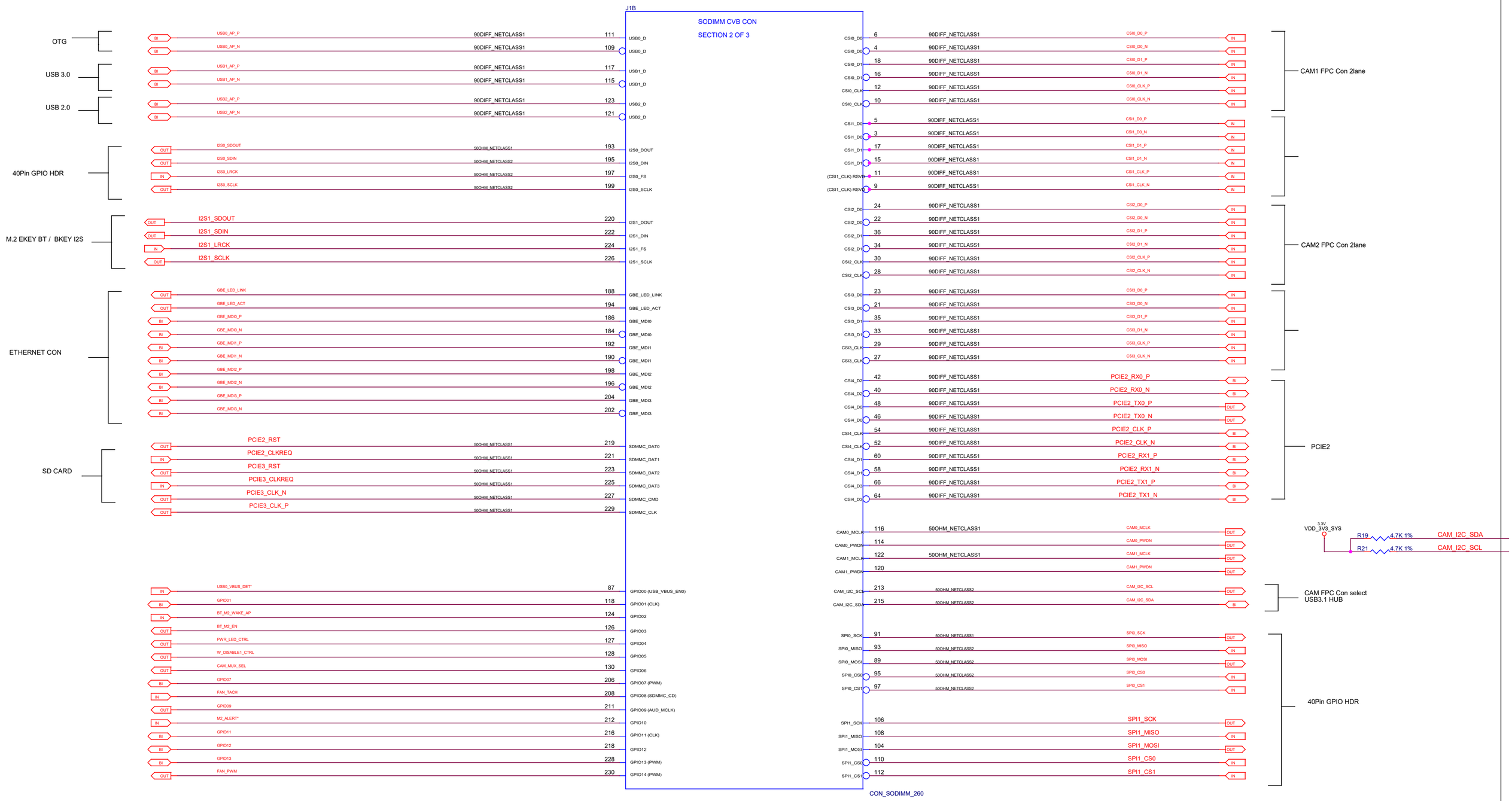

Size	Title: C200	REV
A2	Page Name: 05_SODIMM connector 2_3	V1.11
Date: Thursday, December 04, 2025	Sheet 5 of 21	

HDMI, DP, DSI, USBSS and PCIe

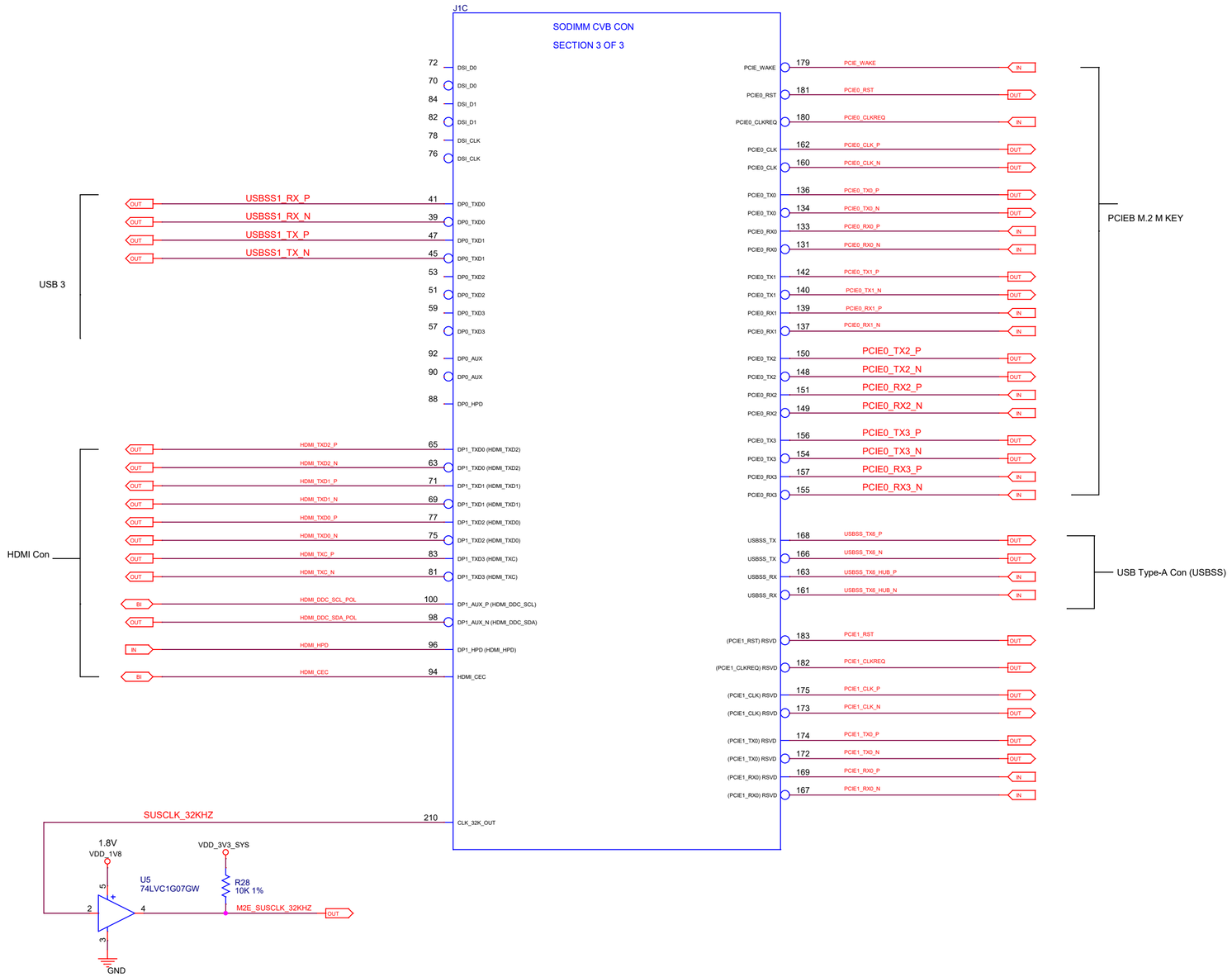

Size: A2	Title: C200		REV: V1.1
	Page Name: 06_SODIMM connector 3_3		
Date: Thursday, December 04, 2025	Sheet 6 of 21		

DC JACK POWER

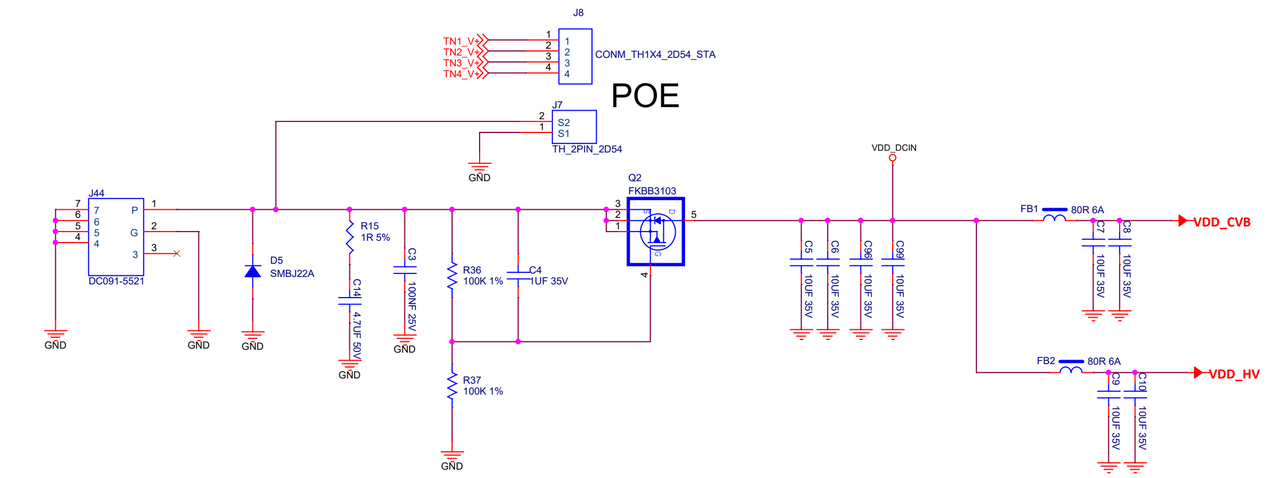

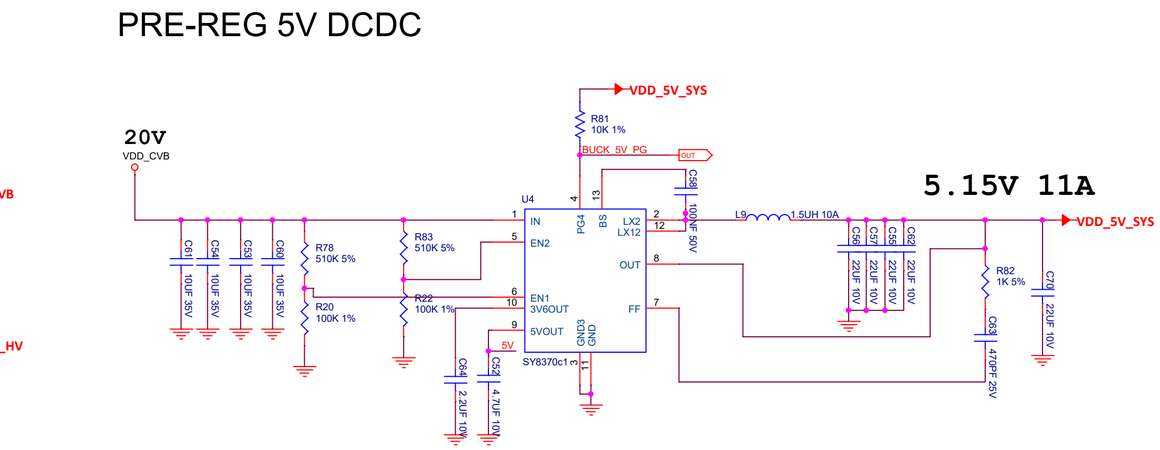

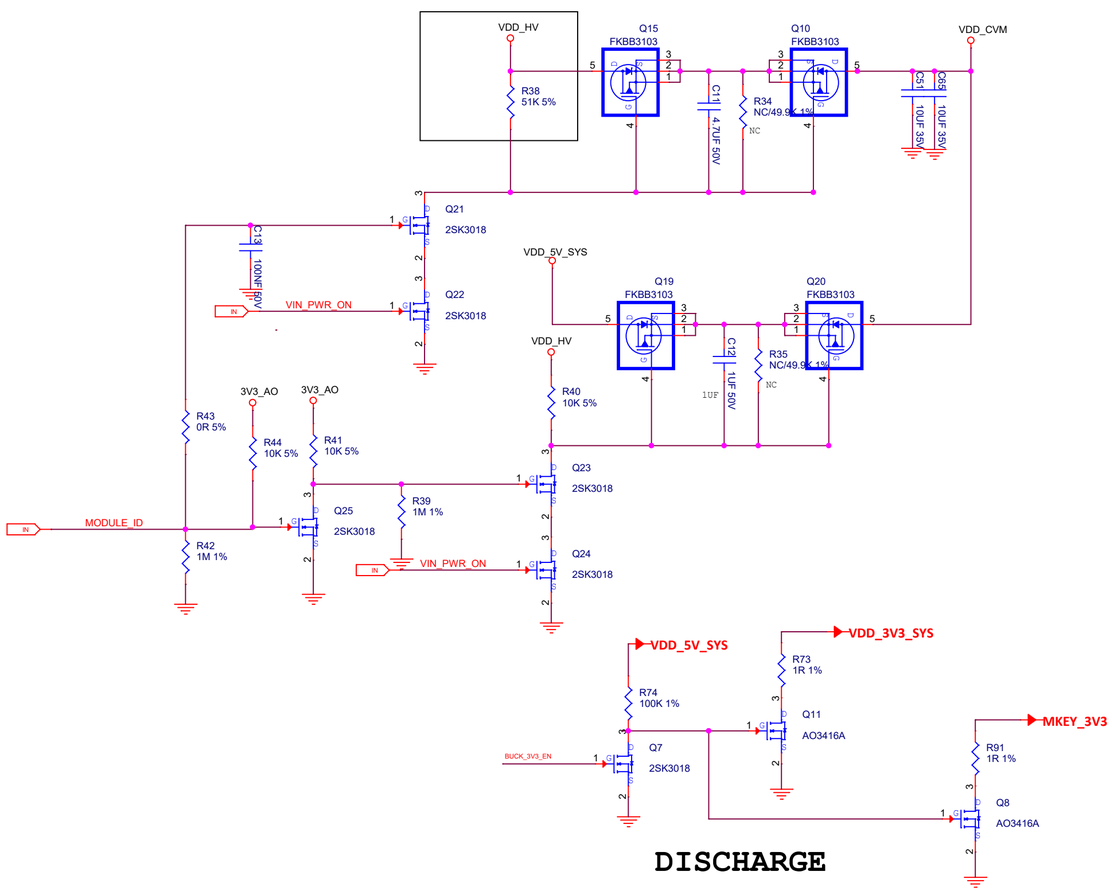

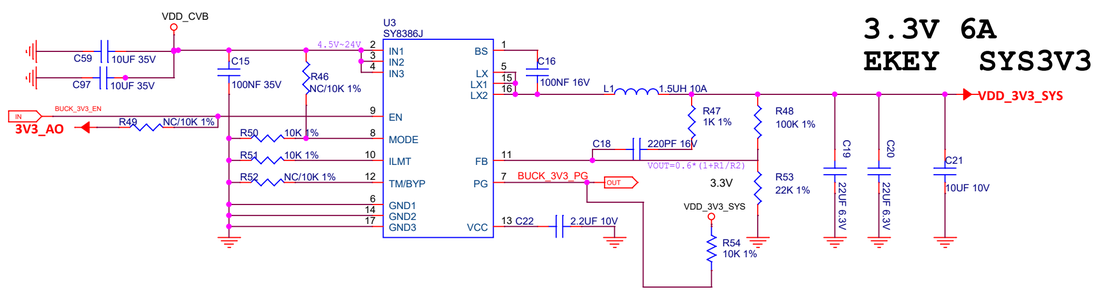

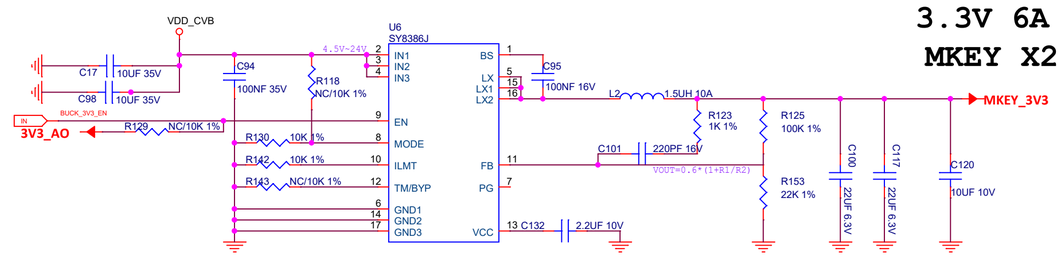

radxa

Size	Title:	REV
A2	C200	V1.11
	Page Name: 07_DC Jack and DCDC	
Date: Thursday, December 04, 2025	Sheet 7 of 21	

SoC Fan Header 4pin

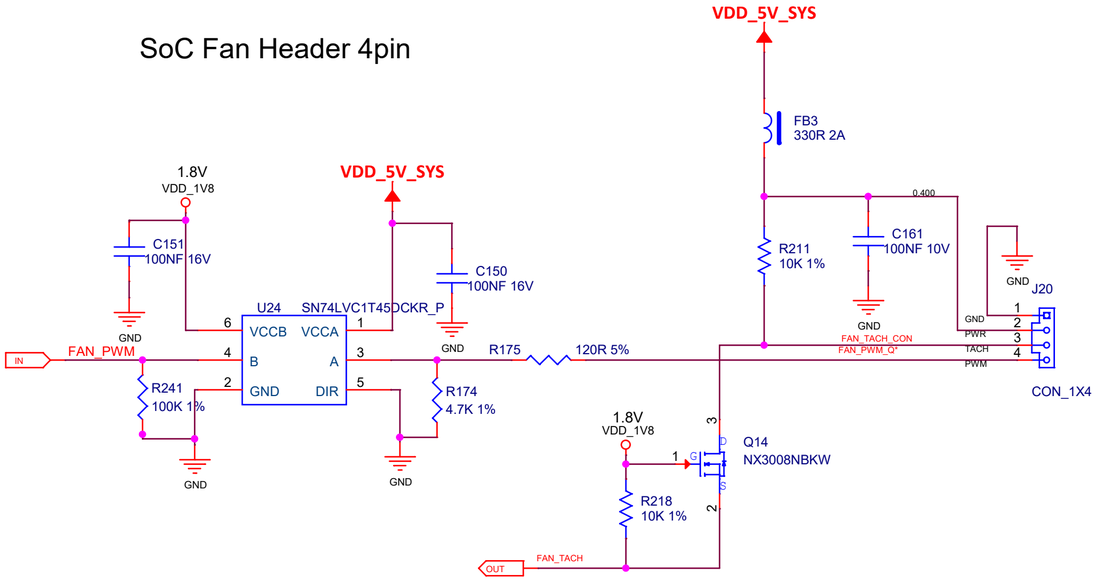

Carrier board config

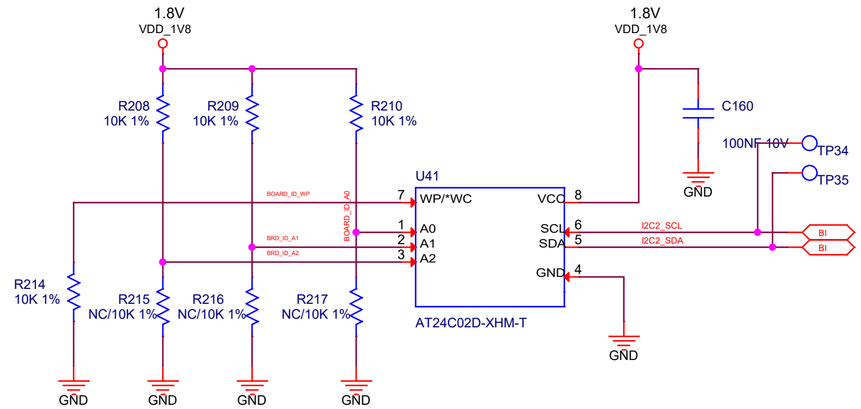

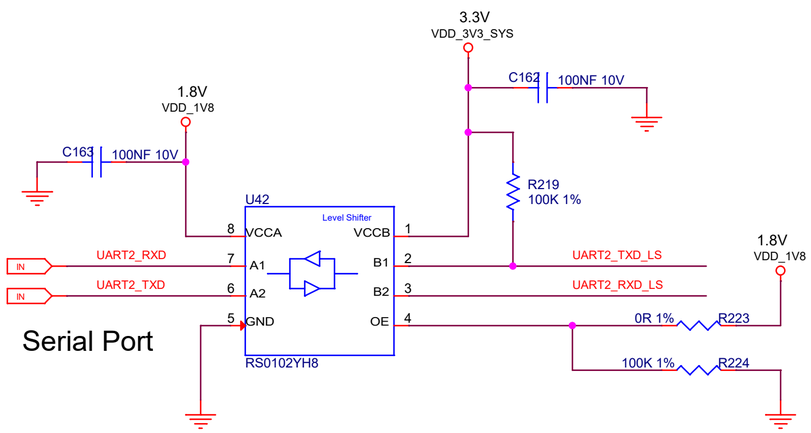

Serial Port

Optional Button Header Pinout

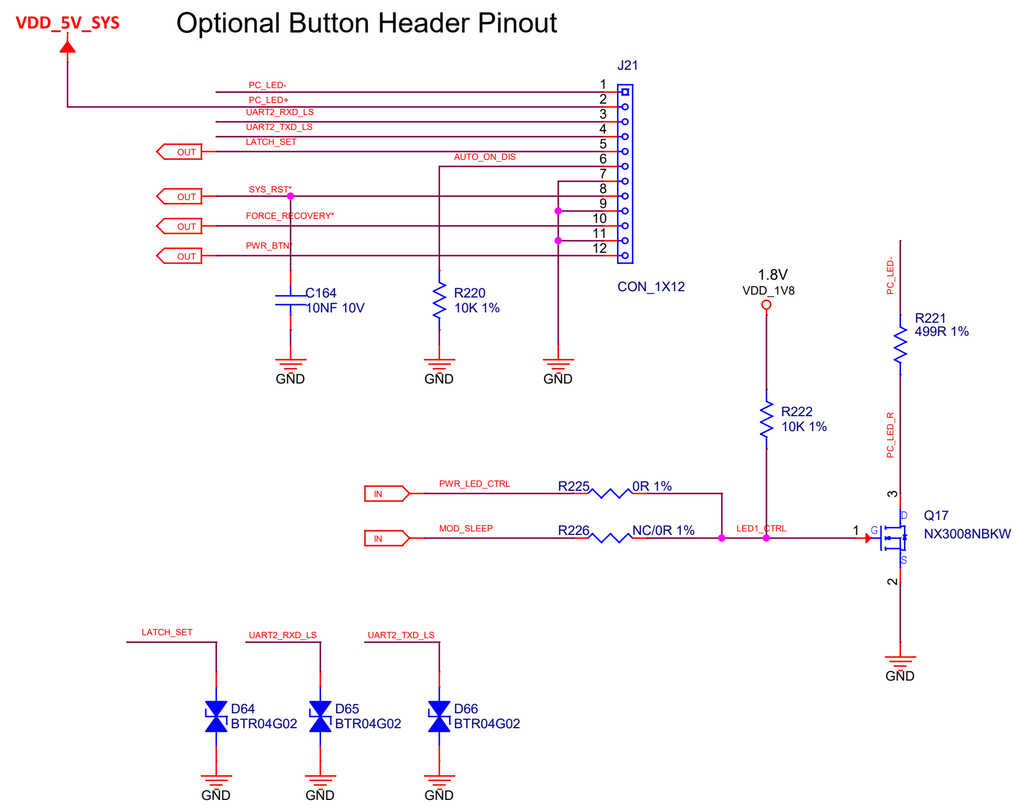

PCB 定位孔 HOLE

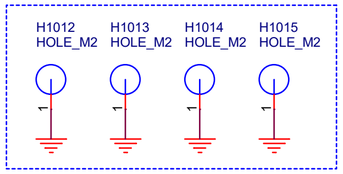

座子 定位孔 HOLE

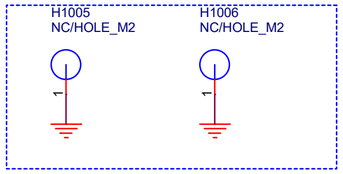

Size	Title:	C200	REV
Custom	Page Name:	08_Fan Debug and EEPROM	V1.11
Date: Thursday, December 04, 2025	Sheet 8 of 21		

1V8 LDO AND 3V3 A0 RAILS

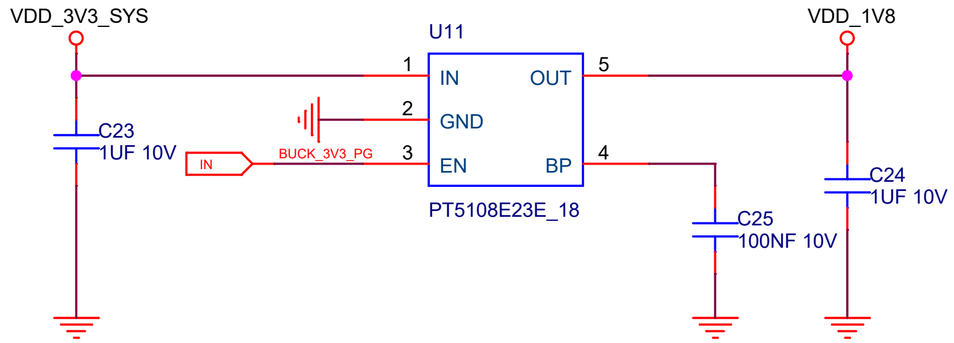

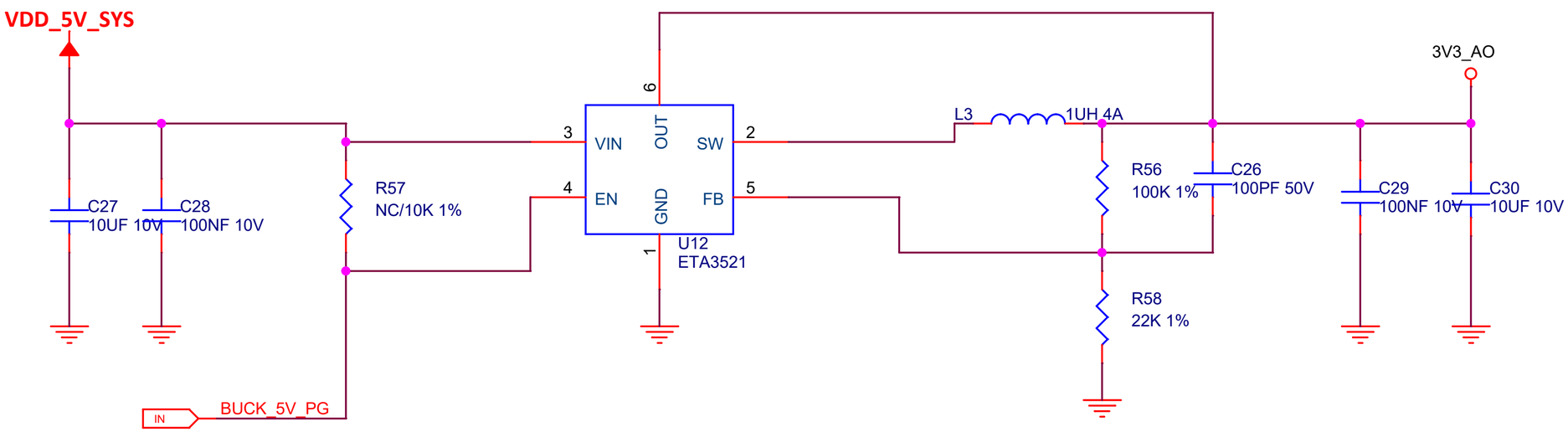

Size	Title:	REV
A4	C200	V1.11
	Page Name: 09_1V8 LDO & 3V3 AO Rails	
Date: Thursday, December 04, 2025	Sheet 9 of 21	

TYPE-C OTG

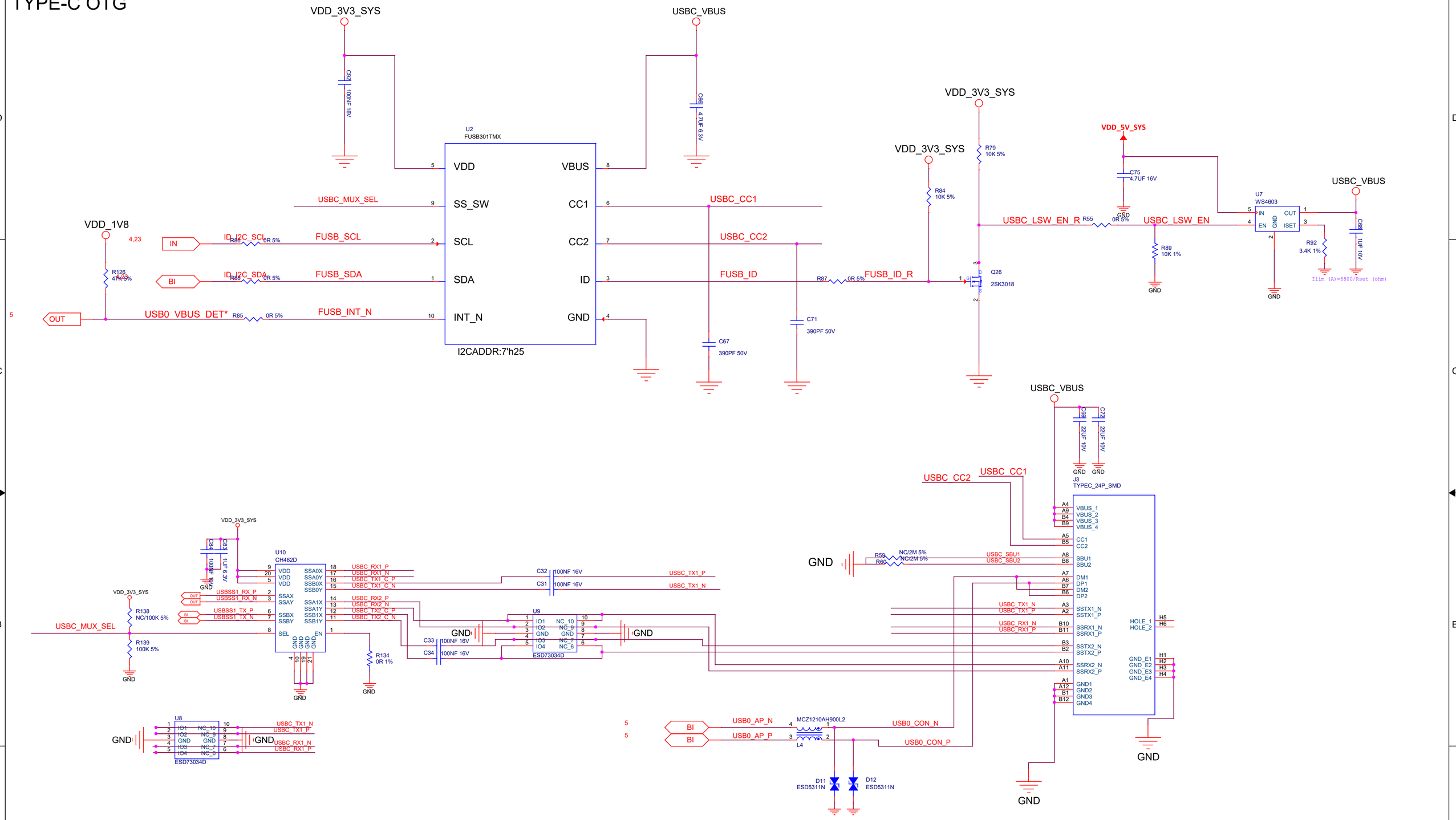

Size	Title:	REV
A2	C200	V1.1
	Page Name: 10_TYPE_C	
Date: Thursday, December 04, 2025	Sheet 10 of 21	

USB3.1 HUB x4 PORTS

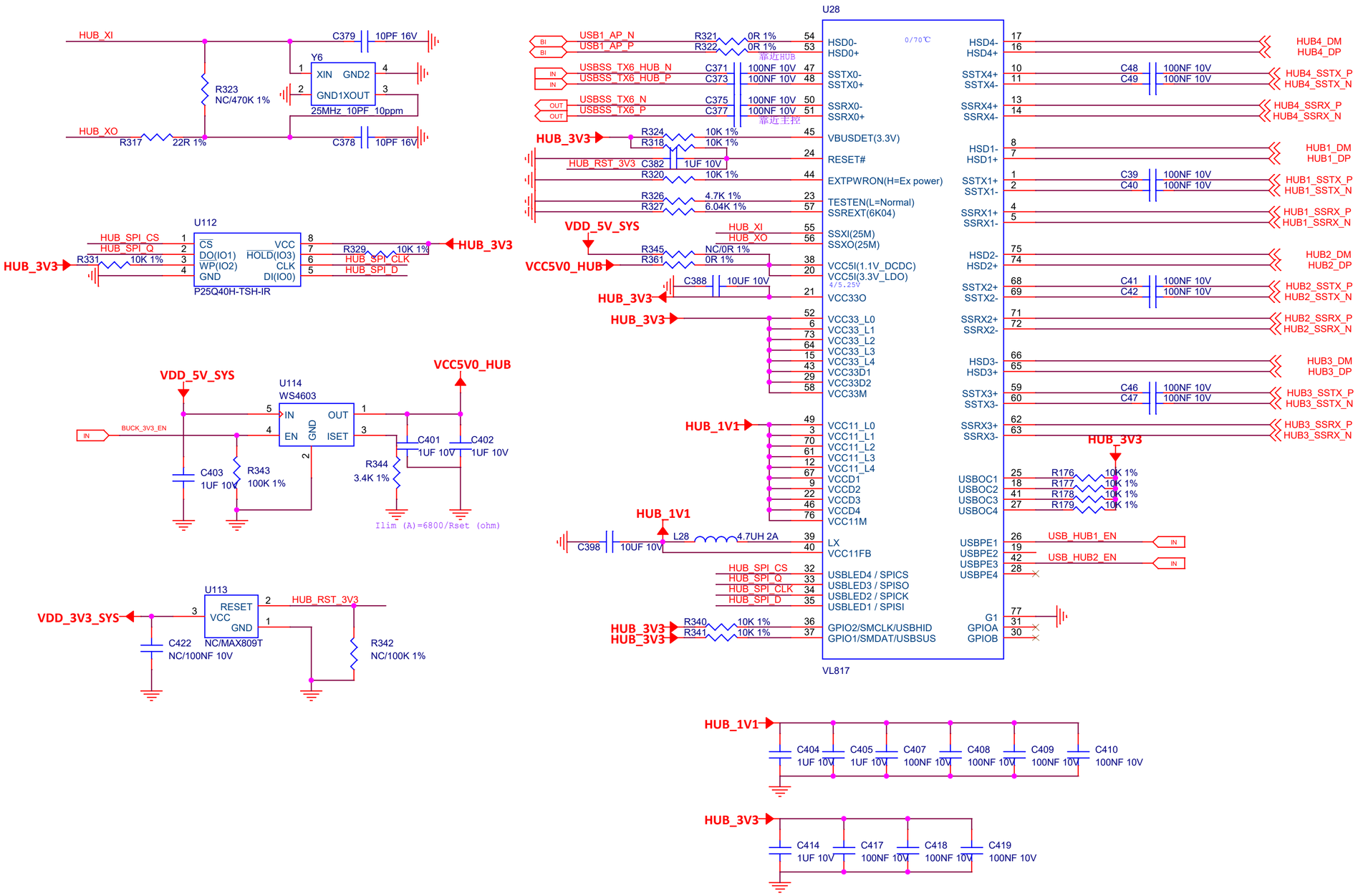

Size	Title:	REV
Custom	Page Name: 11_USB3.1 x4 HUB	V1.11
Date: Thursday, December 04, 2025	Sheet 11 of 21	

USB 3.0 TYPE A x2 CONNECTOR (1 OF 2)

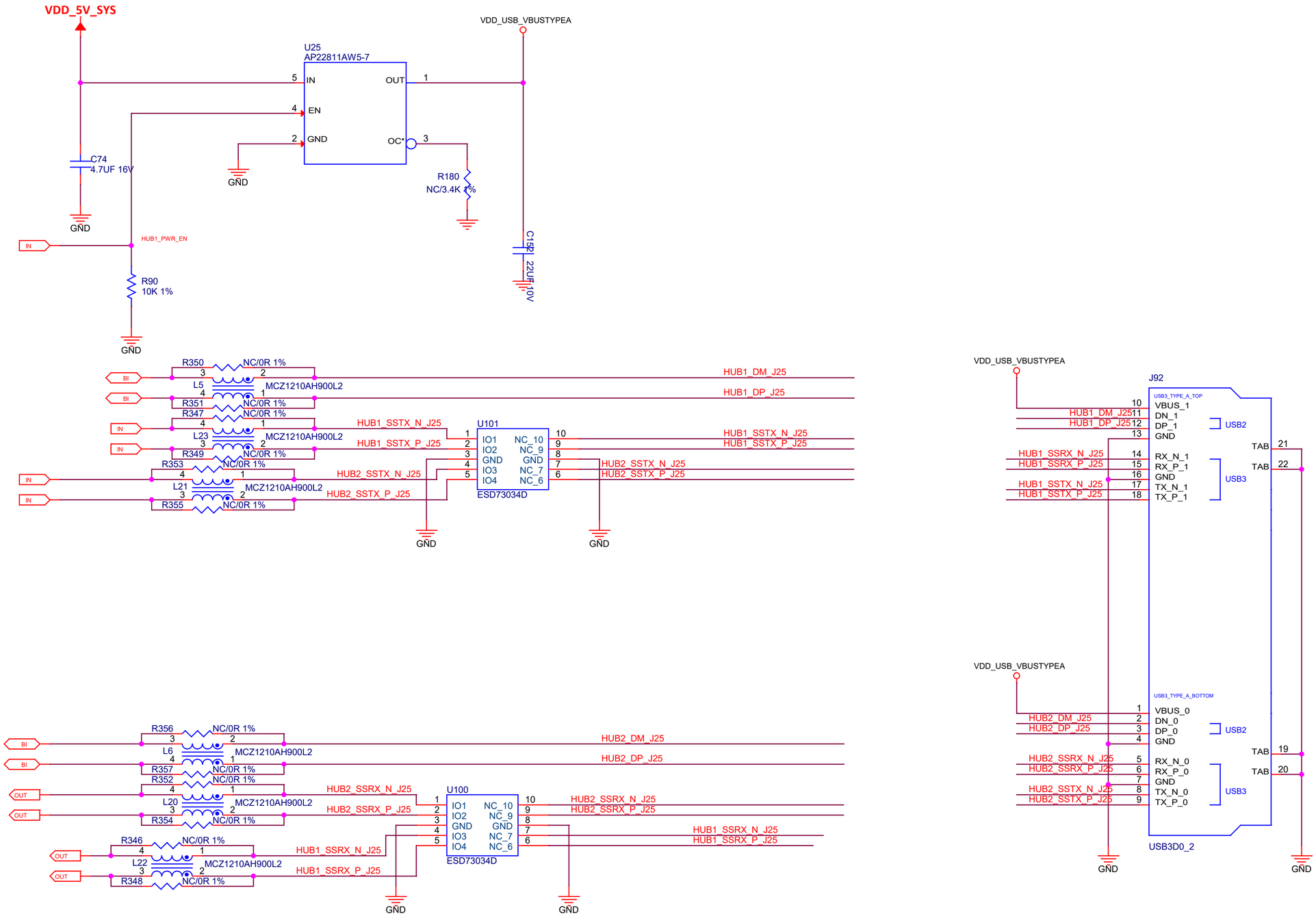

Size	Title:	REV
Custom	Page Name: 12_USB3.1 Type-A x2 (A)	V1.1
Date: Thursday, December 04, 2025	Sheet 12 of 21	

USB 3.0 TYPE A x2 CONNECTOR (2 OF 2)

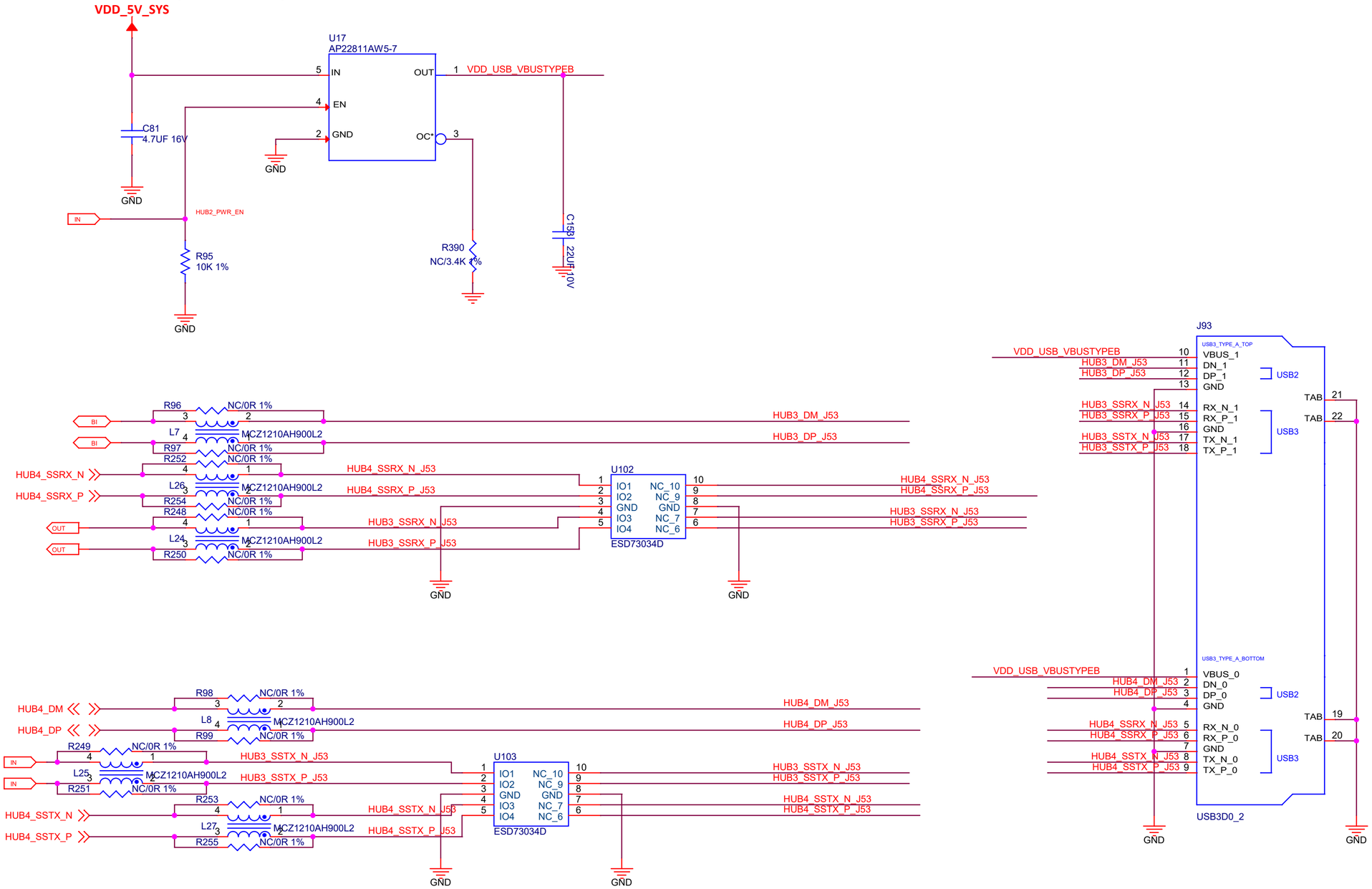

radxa

Size	Title:	REV
Custom	Page Name: 13_USB3.1 Type-A x2 (B)	V1.1
Date: Thursday, December 04, 2025	Sheet 13 of 21	

BUTTON MCU FOR POWER UP

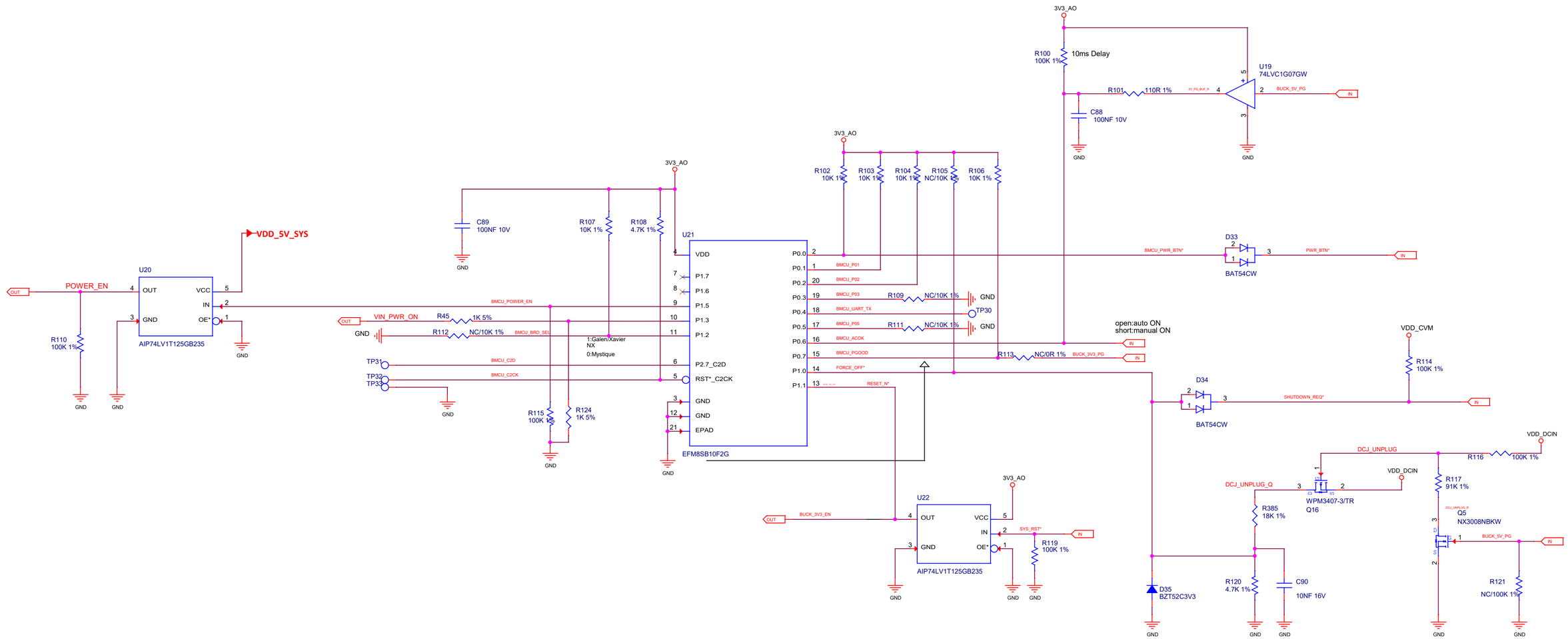

radxa

Size	Title:	REV
A2	C200	V1.11
	Page Name: 14_BUTTON_MCU	
Date: Thursday, December 04, 2025	Sheet 14 of 21	

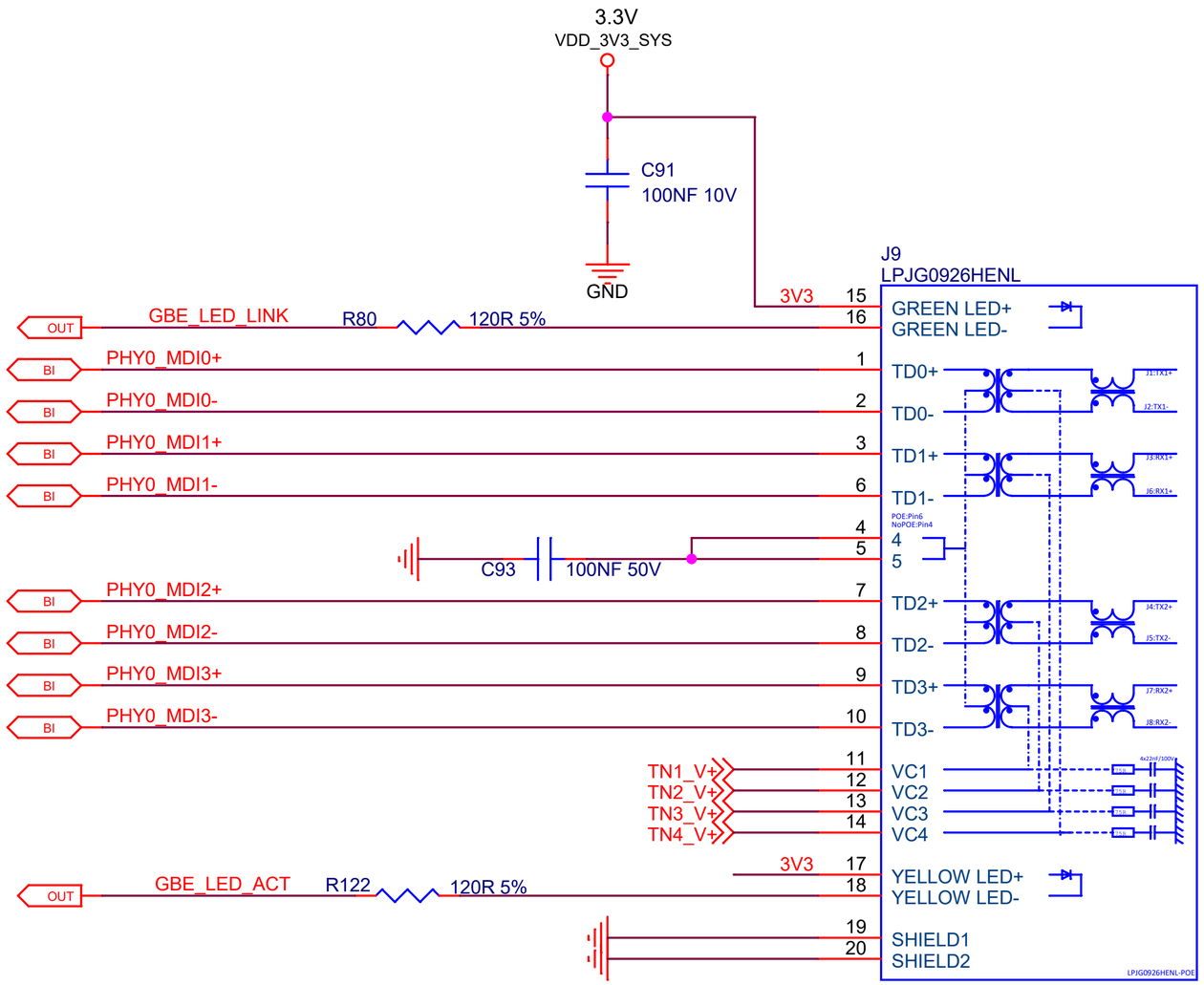

Size	Title:	REV
A4	C200	V1.11
	Page Name: 15_Gigabit_Ethernet	
Date: Thursday, December 04, 2025	Sheet 15 of 21	

HDMI&DP

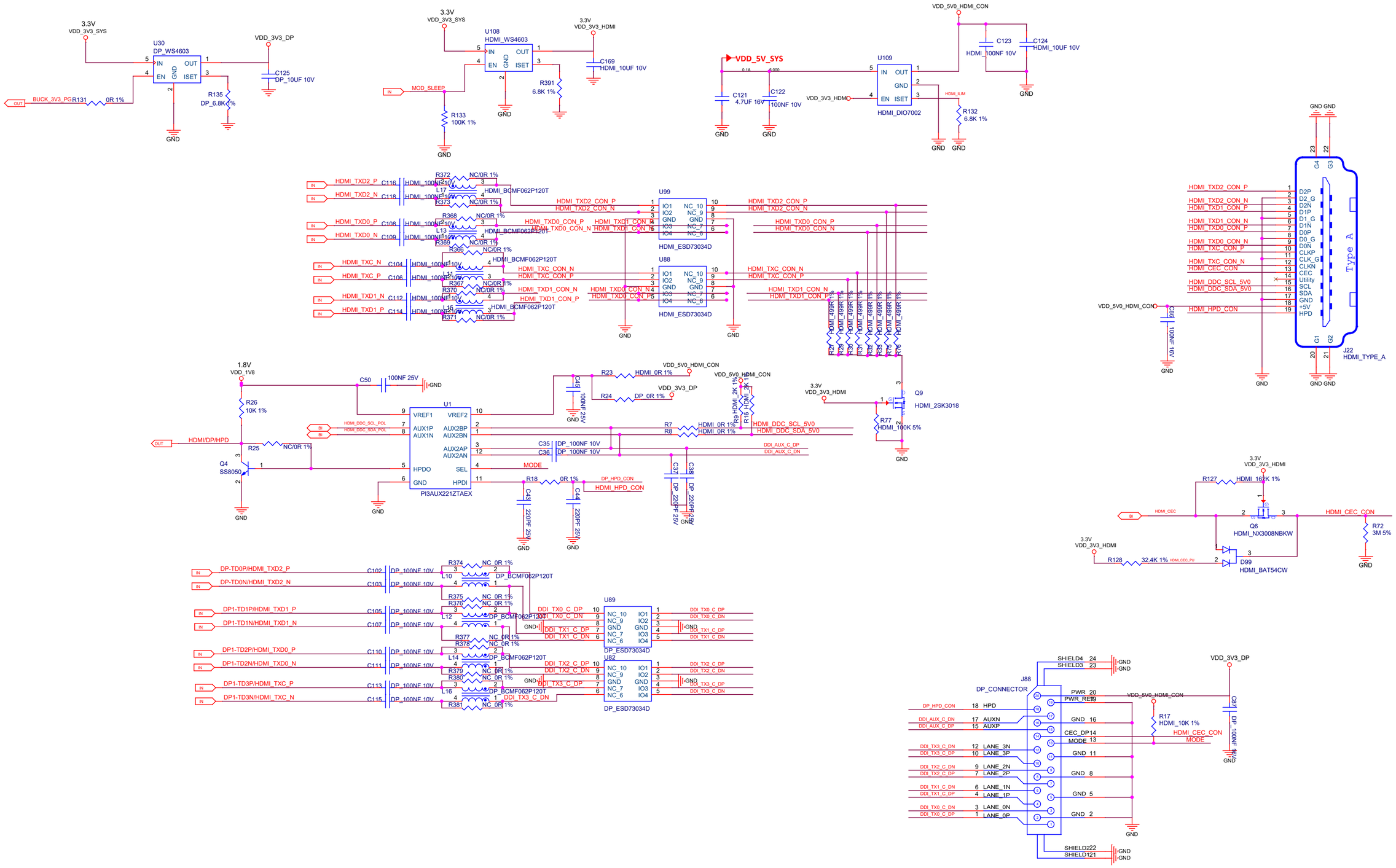

Size	Title:	REV
A2	C200	V1.1
	Page Name: 16_HDMI&DP	
Date: Thursday, December 04, 2025	Sheet 16 of 21	

CSI CAM CONNECTOR

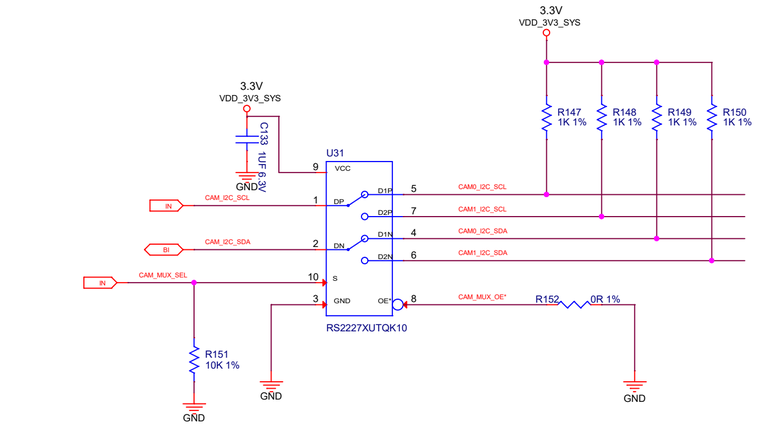

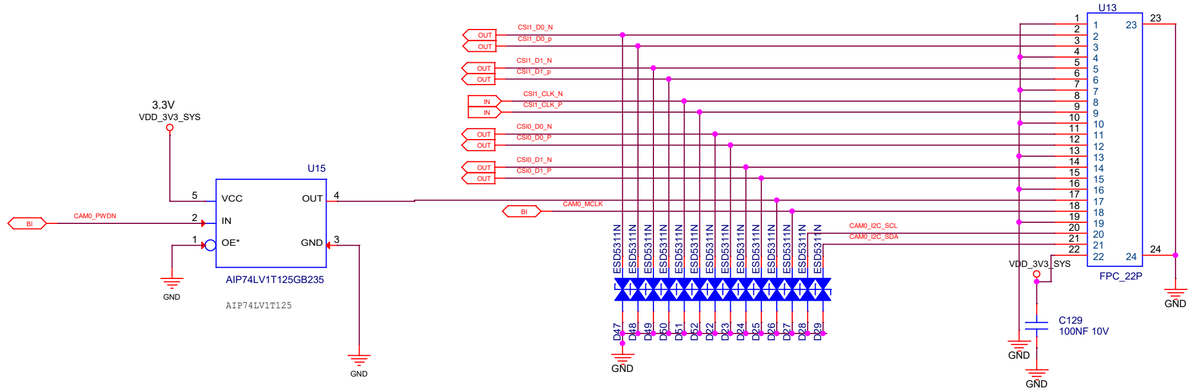

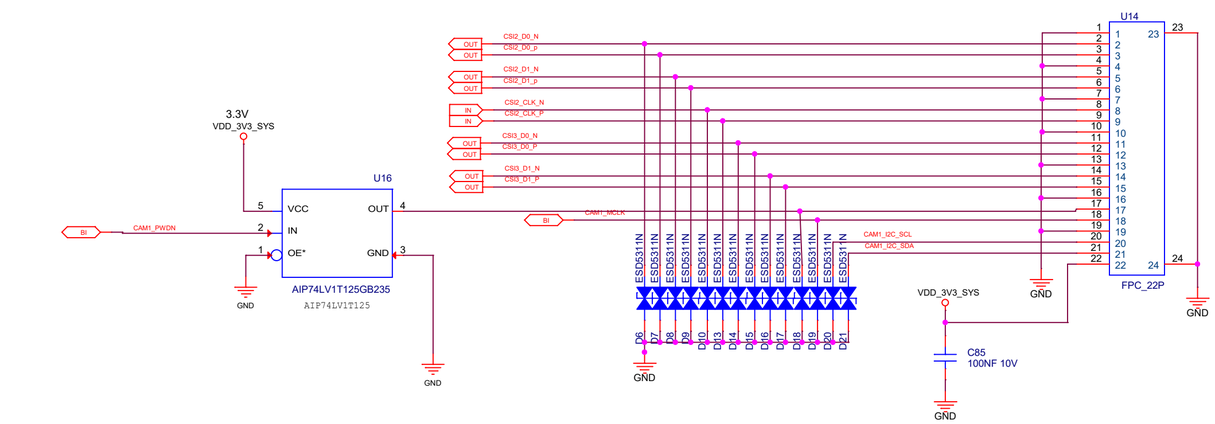

Size A2	Title: C200	REV V1.1
	Page Name: 17_CAM_Connector	
Date: Thursday, December 04, 2025	Sheet 17 of 21	

40PIN GPIO EXPANSION HEADER & LEVEL SHIFTERS

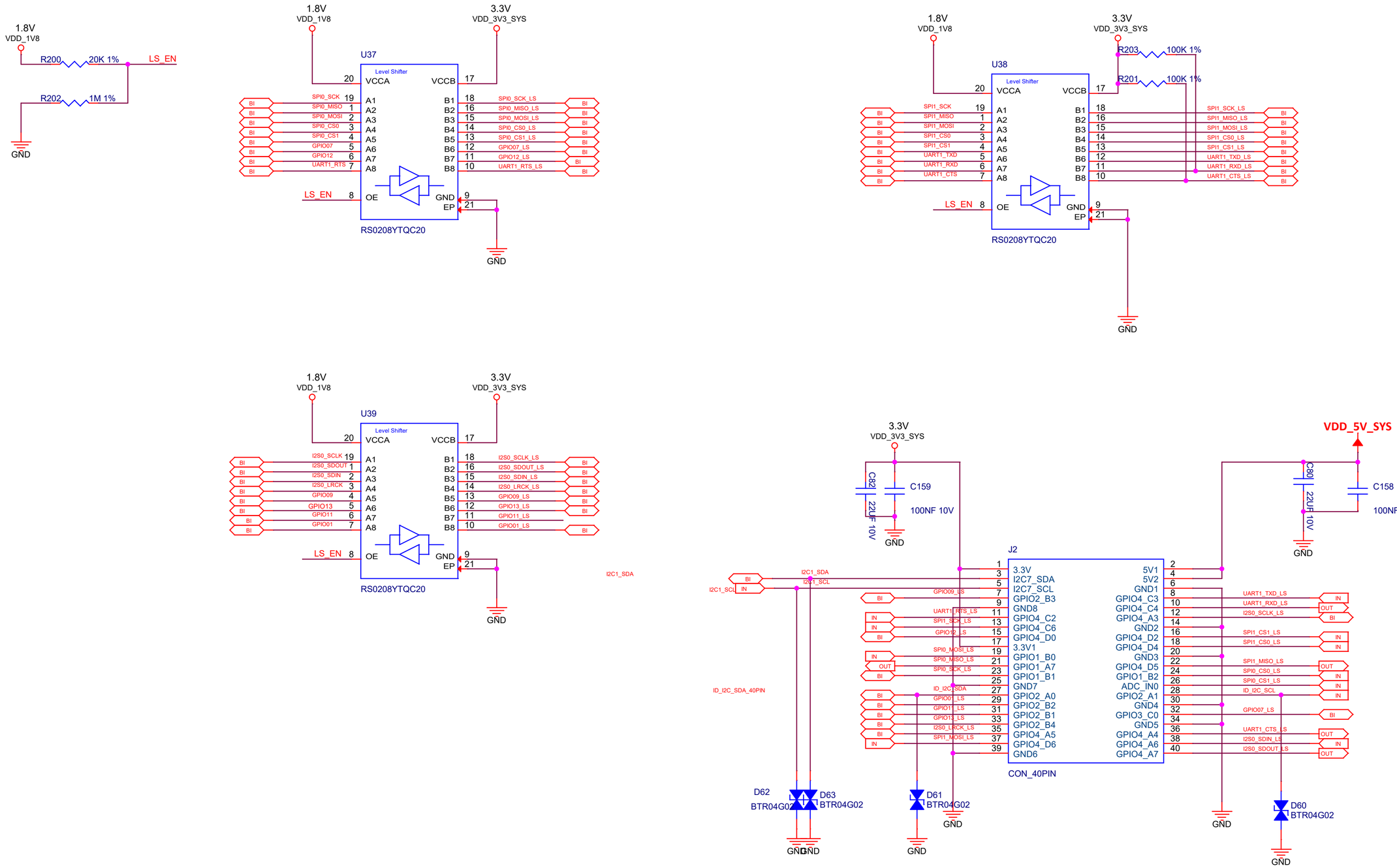

radxa

Size	Title:	C200	REV
Custom	Page Name:	18_40Pin_GPIO_expansion_heade	V1.11
Date: Thursday, December 04, 2025	Sheet 18 of 21		

M.2 KEY-M (NVME)

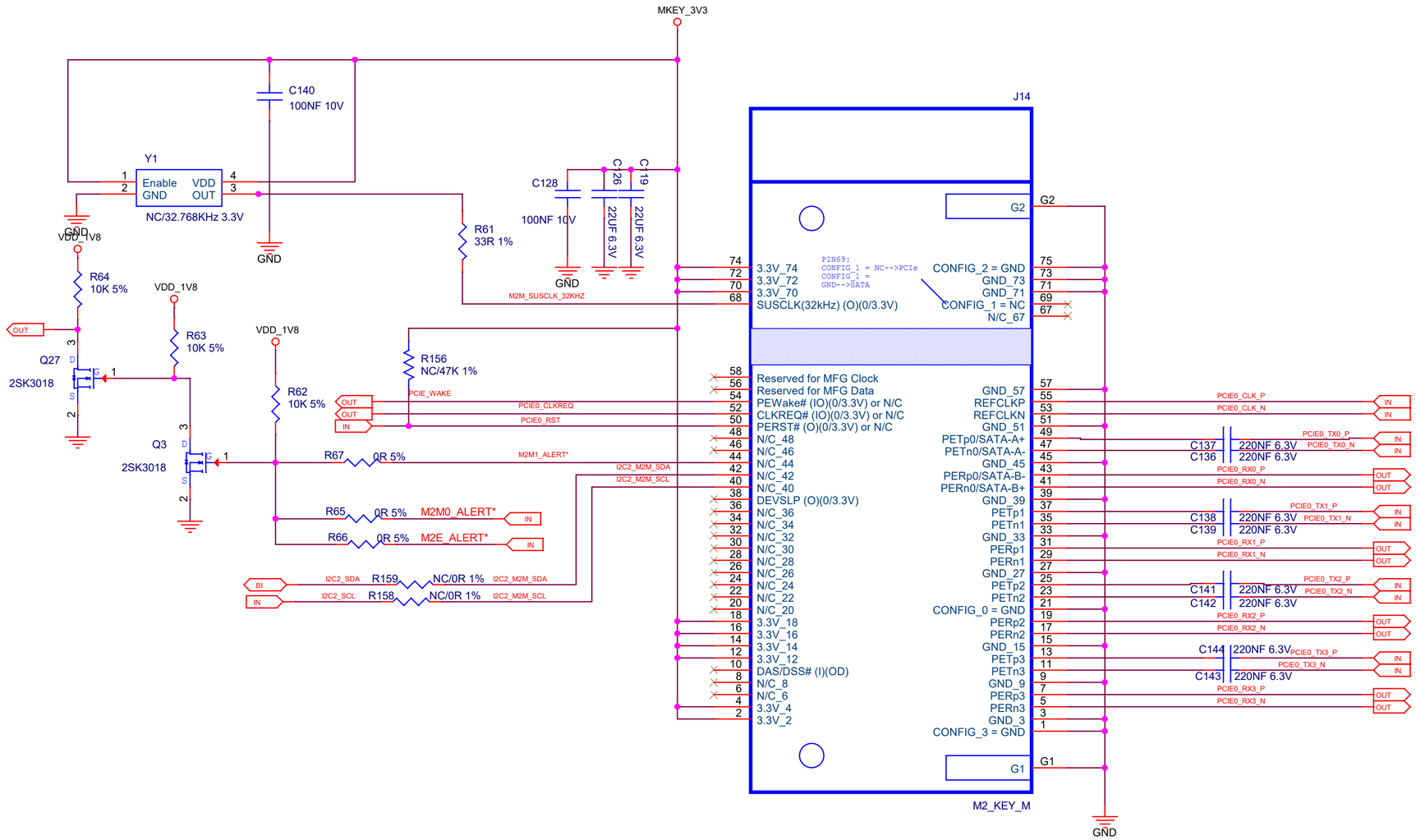

M2 J14_HOLE

Size: Custom	Title: C200	REV V1.11
	Page Name: 19_KEY_M_X4	
Date: Thursday, December 04, 2025	Sheet 19 of 21	

KEY M

M.2 KEY-M (NVME)

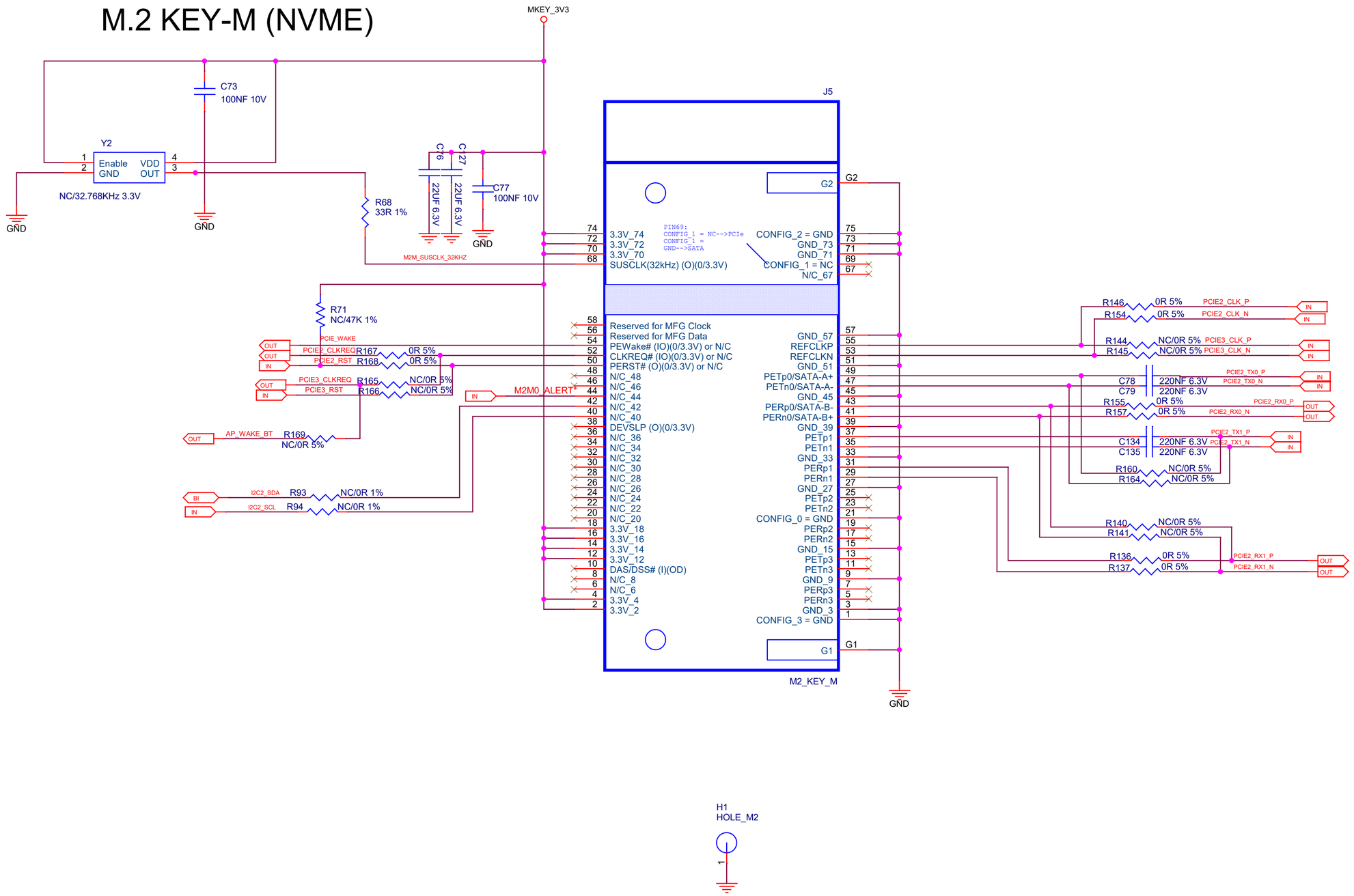

H1
HOLE_M2

radxa

Size	Title:	REV
Custom	C200	
	Page Name: 20_KEY_M_X2	V1.11
Date: Thursday, December 04, 2025	Sheet 20 of 21	

M.2 KEY-E (WIFI/BT)

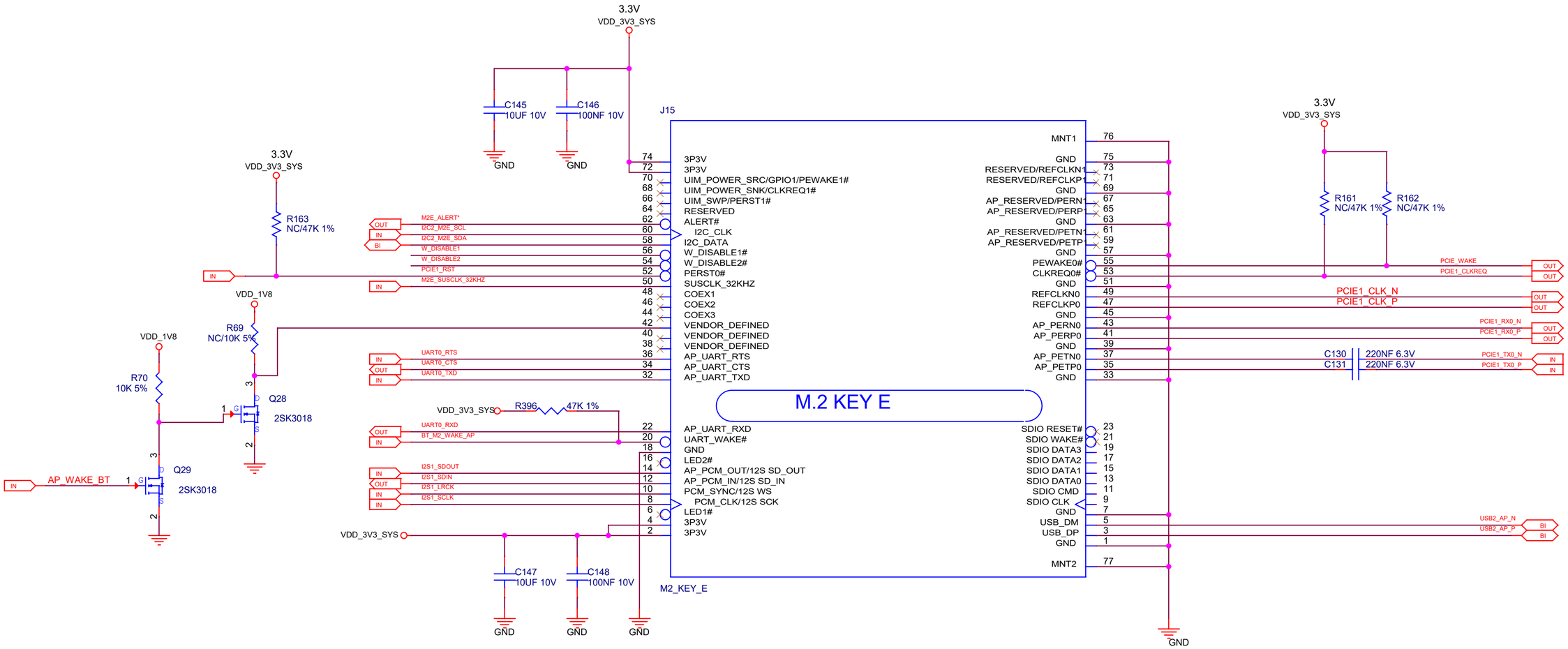

M2 J15_HOLE

Size	Title:	REV
Custom	C200	V1.11
	Page Name: 21_KEY_E	
Date: Thursday, December 04, 2025	Sheet 21 of 21	