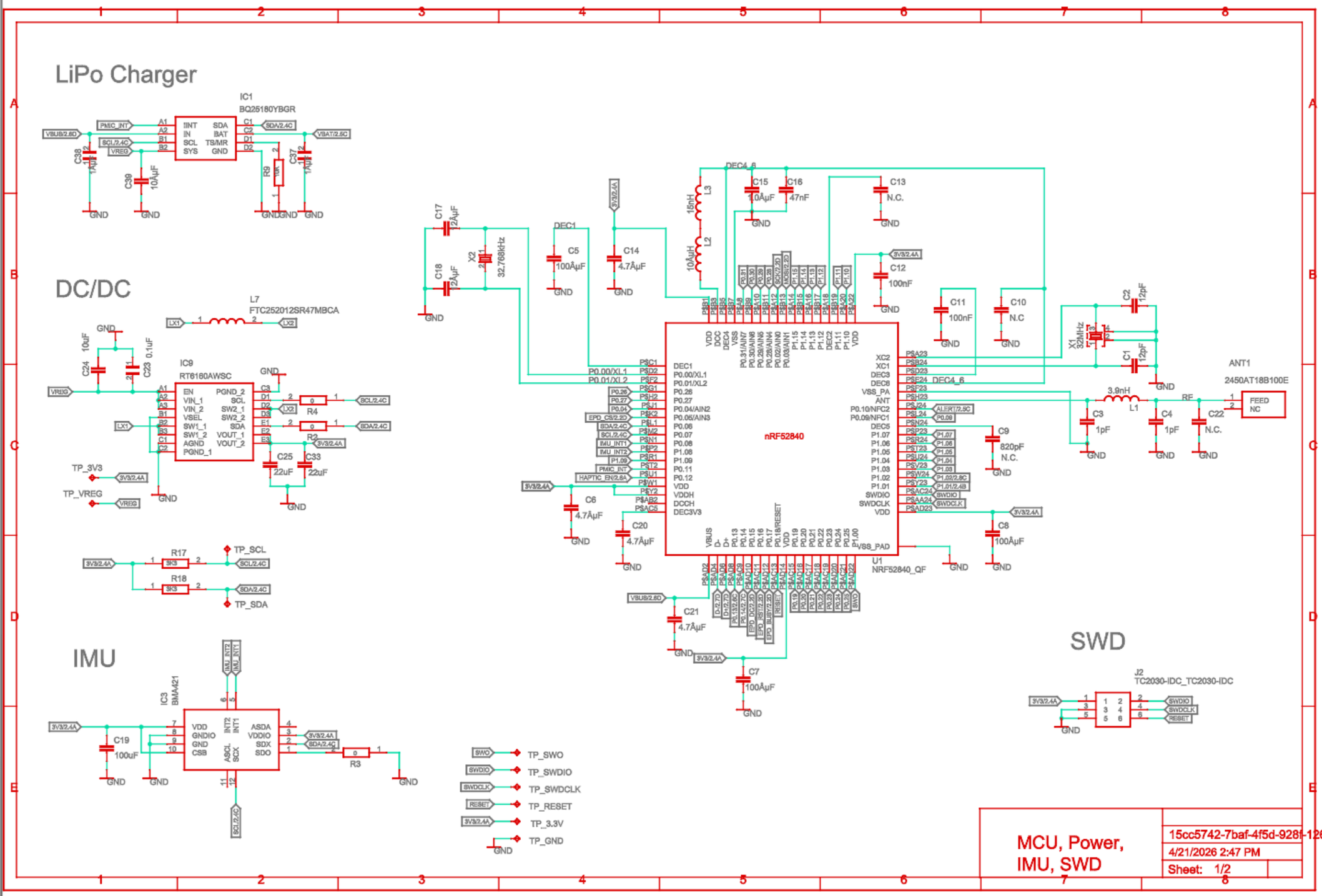
LiPo Charger
IC1
BQ25180YBGR
DC/DC
L7
FTC252012SR47MBCA
IC9
RT6160AWSC
IMU
IC3
BMA421
nRF52840
U1
NRF52840_QF
ANT1
2450AT18B100E
SWD
J2
TC2030-IDC_TC2030-IDC
TP_3V3
TP_VREG
TP_SCL
TP_SDA
TP_SWO
TP_SWDIO
TP_SWDCLK
TP_RESET
TP_3.3V
TP_GND
MCU, Power, IMU, SWD
15cc5742-7baf-4f5d-928f-126d9e246c40
4/21/2026 2:47 PM
Sheet: 1/2

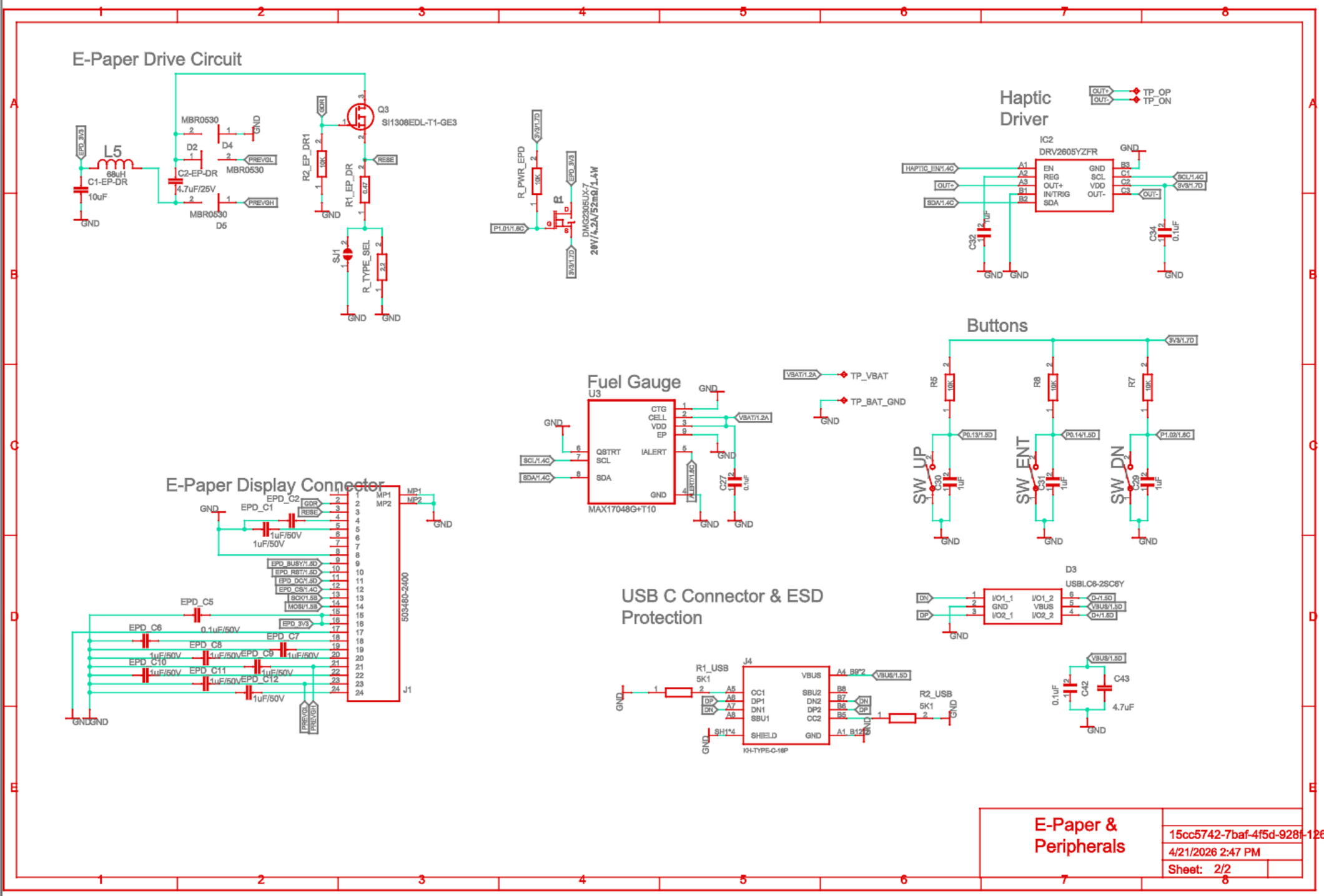

E-Paper & Peripherals

15cc5742-7baf-4f5d-928f-126d9e246c40

4/21/2026 2:47 PM

Sheet: 2/2