MINIMILL V1.4 ASSEMBLY MANUAL

A.K.A MILO

Millennium

INTRODUCTION

Take a deep breath for a second and realise something.

You... yes **YOU**, are about to commit to building a robot that can cut through metal, let alone your squishy human parts...
A machine that can easily electrocute you, cut you or set fire to your whole neighbourhood If it's not given the respect it deserves.
Please give this machine the respect it deserves !!!

Please follow the manual to the letter and perform any additional research you deem necessary before first attempting to use it.
If there is anything, and we mean anything that you are curious or unsure about you are more than welcome to ask us on our discord channel
After all, you are special to us and we don't want you to get hurt due to a lack of knowledge.

Most importantly from everyone at the Millennium design team,
Have fun building your very first milo.

TABLE OF CONTENTS

03 Version Selection

03 Machine Work Area And BOM

04 Contact Info

06 Part Identification Chart

10 Printing Guide

12 Upgrade Guide

13 Printed Part List

16 Y axis assembly

40 X axis assembly

55 Z axis assembly

VERSION SELECTION

Currently, milo supports 2 versions of the z-axis, a NEMA 23 and NEMA 17 version which denotes what type of motor is used to drive the z-axis. whilst it is recommended to build the NEMA 23 version due to the weight of the axis it is possible to get away with using the NEMA 17 version assuming it can output enough force. make sure you print the file that is associated with your motor choice and remember if you are self-sourcing your parts each version also requires its own associated hardware, a list of which can be found in the **bom**.

There exists also at this time 2 versions of the spindle mount, a 70mm version to fit Dewalt style routers and a 65mm version to fit most 1.5kw Chinese spindles.

MACHINE WORK AREA AND BILL OF MATERIALS

whilst it is recommended to build your machine as small as possible to retain rigidity there is flexibility in the size of the work area. whilst the y axis sees a fixed 160mm of travel the x and z-axis can be adjusted to fit your needs. in the BOM which can be found here you can modify 3 variables with the inbuilt calculator:

1. the x-axis work area, which denotes the travel distance that a tool can move over the x-axis
2. the z-axis clearance, which denotes the maximum height of items placed in the work area before it hits the z column
3. the z-axis travel, which is the maximum travel distance that a tool can move over the z-axis

These variables will dictate the length of aluminium extrusions, linear rails and lead screws and will automatically update the number of fasteners necessary.

CONTACT US FOR HELP

Building milo can be confusing but we're here to help.
if you have any questions contact us over on discord or on Reddit.
the same applies to questions for the community we're all one big weird family after all.

DISCORD https://discord.gg/TY4mtzhpZY

r/MilleniumMachines

This page is intentionally left blank

HARDWARE AND FASTENERS

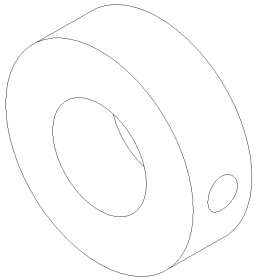

8MM BORE LOCKING RING

Metal rings with set screws used to set the position of leadscrews

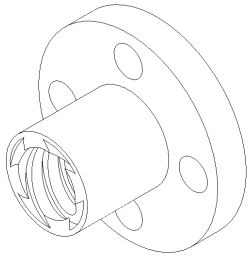

BRASS TR8X8 LEADSCREW NUT

Used to transfer motion from leadscrews to linear motion in each axis

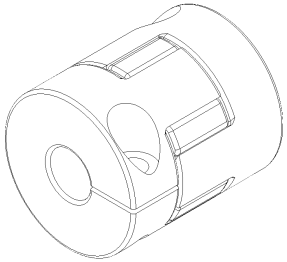

5MM TO 8MM SPIDER COUPLER

Used to bind stepper motor shafts to leadscrew on the X and Y axes

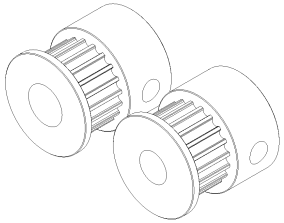

20 TOOTH 5MM OR 6.25MM BORE GT2 PULLEY

Used to gear down the Z axis motion system attached to the stepper motor

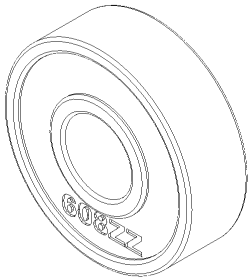

608ZZ BALL BEARINGS

USED IN VARIOUS LOCATIONS IN THE MOTION SYSTEM

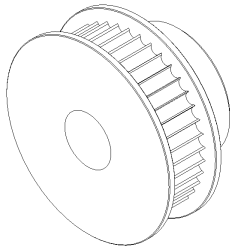

40 TOOTH 8MM BORE GT2 PULLEY

Used to gear down the Z axis motion attached to the leadscrew

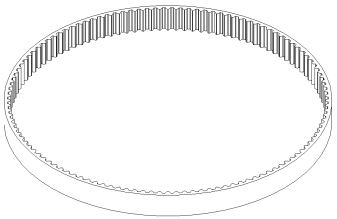

GT2 230MM CLOSED LOOP BELT

Used to gear down the z axis motion system attached between 2 pulleys

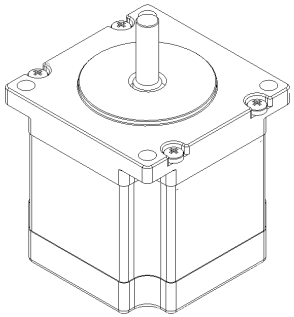

NEMA 23 STEPPER MOTOR

Converts electrical signals from the controller board to rotational motion at the motor shaft (Used only in the NEMA 23 Z version)

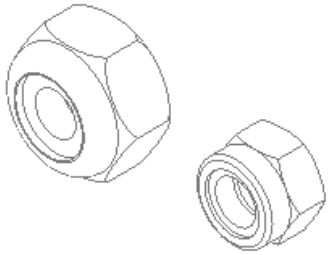

M5 AND M3 NYLOC NUTS

Nuts containing a nylon insert to stop screws from backing out due to vibrations

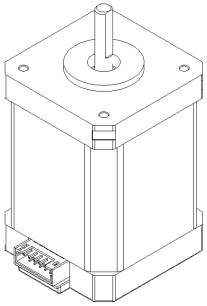

NEMA 17 STEPPER MOTOR

Converts electrical signals from the controller board to rotational motion at the motor shaft

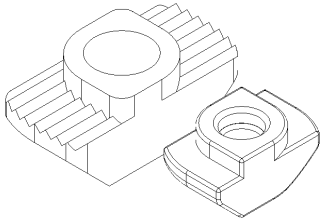

M5 AND M3 HAMMER NUT

Used to install components directly to aluminium extrusions using bolts

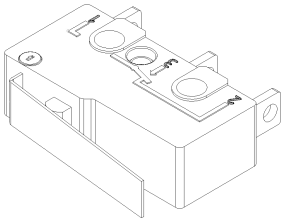

OMRON STYLE MICRO SWITCH

Used by the machine to find a consistent home or 0 position

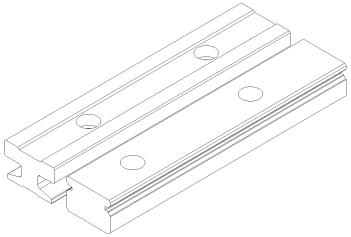

IGUS TS-01-15 OR MGN15 LINEAR RAILS

Used to constrain the motion of all axis in a consistent linear direction

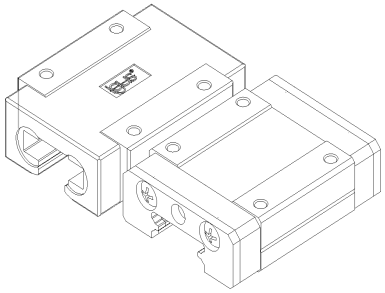

IGUS TW-04-15 OR MGN15C LINEAR RAIL CARRIAGES

Used in conjunction with linear rails to allow for linear motion across a rail

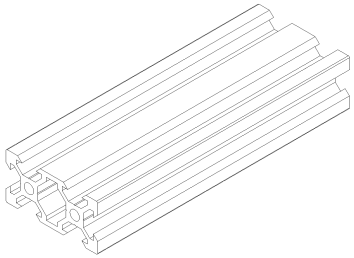

2040 ALUMINIUM EXTRUSION

Used as a structural component in the CNC

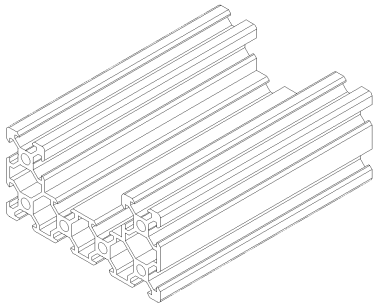

C-BEAM ALUMINIUM EXTRUSION

Used as the main structural component in the CNC

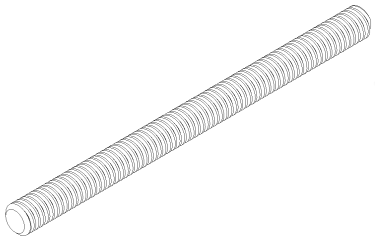

TR8X8 LEAD SCREW

Leadscrew used in conjunctions with stepper and couplers to produce linear motion in each axis

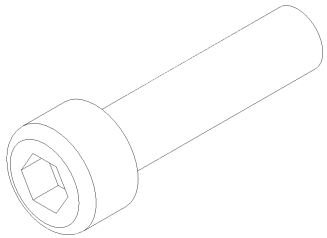

M5x20MM SOCKET HEAD CAP SCREW

Used exclusively in the NEMA 23 Z axis variant

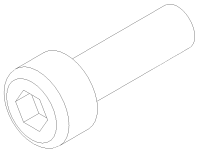

M2X8MM SOCKET HEAD CAP SCREW

Used exclusively to secure micro switches in place

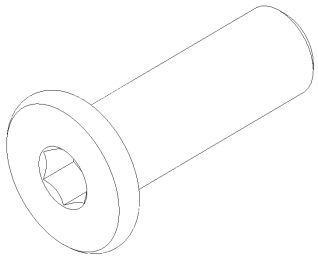

M5X12 LOW PROFILE SCREW

Used as the main structural screws of the machine and in places that require the clearance

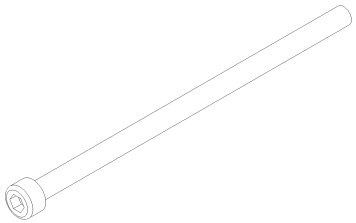

M5X100MM SOCKET HEAD CAP SCREW

Used to secure the spindle and spindle mount to the Z axis

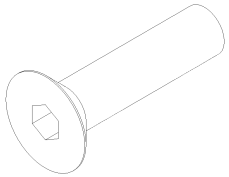

M3X15MM COUNTERSUNK SCREW

Used exclusively to attach rail carriages to mounting plates

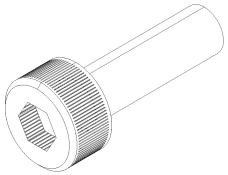

M3X12MM SOCKET HEAD CAP SCREW

Used to attach NEMA 17 motors ro motor mounts and rails to aluminium extrusions

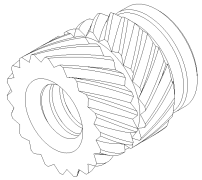

M2 HEAT INSERT

When heated up using a soldering iron these parts are pressed in to 3D printed parts to create a robust permanent thread

PRINTED PARTS

NOTE ON PRINTING GUIDELINES :

The table and details below have been provided for you as a guideline for printing the parts necessary for the build. inside you'll find details on some of the print settings that will give you the best mechanical properties suited for each individual part. Remember these settings are only a guideline and are open to your own interpretations but we do highly recommend following them.

MATERIAL CHOICES :

MATERIAL STRENGTH :

if you've ever built a 3d printer from scratch before begin by forgetting everything you learned about 3d printer plastics. a common mistake that long time 3d printers make is to use "mechanically popular" filaments such as **PETG** because of its relatively easy printability and high layer to layer bonding strength which means for a given object printed at a given wall thickness and infill the object will withstand abuse across its layer lines better than other 3d printer plastics, the aspect of this that most people forget is that the same effect can be achieved by increasing the wall thickness of a given object regardless of the material used. For example, a part printed with 1mm walls in **PETG** probably won't be as strong as the same part printed in **ABS** with 2mm walls despite **ABS** having a fairly weak layer to layer bonding strength compared to **PETG**.

MATERIAL STIFFNESS, HARDNESS AND BRITTLENESS :

CNC mills need to be stiff, there is no denying that fact so therefore it's worth talking about the stiffness of 3d printing plastics and their associated downsides.
stiffness is a material's ability to resist bending forces which sounds like a good thing ... right? Well yes but also no. Although it's not a rule when the stiffness of a material increases so too does its hardness most of the time and in the same way, a material being harder tends to mean it is also more brittle. take hardened steel, for example, used in everything from knives and razor blades to the endmills you'll be using when you finally finish listening to me drone on about material science and actually build the machine. although hardened steel is extremely stiff if you hit it with a hammer it shatters like glass. the same goes for 3d plastics, however, unless you plan on hitting your CNC mill with a hammer, for the most part, stiffer plastics will be fine to build your CNC, with the exception of some components that will be marked in the table below and are better off printed in less rigid plastic. Most of the time generic consumer plastics go in this order of stiffness **TPU<NYLON<PETG<ABS<PLA.**

MATERIAL THERMAL PROPERTIES :

to be brief here the thermal properties of most generic consumer 3d plastics are good enough for the majority of the parts (except for the spindle mount which can get hot) some care might be taken by using more heat resistant plastics in hot areas or for parts in contact with a stepper motor, however, this is not necessary most of the time especially when using a 24v system which tends to lower the stepper motors operating temperature.

SPECIALTY PLASTICS :

Some 3d plastics contain modifiers such as chopped carbon or glass fibres to increase stiffness or are modified versions of other generic 3d plastics such as **PLA+** or **ASA** and might even sound tempting at first but can add cost and complexity to the printing process. **PLA+** tends to be a more impact resistant but a less stiff form of **PLA** so should be avoided for this application. **ASA** is an acceptable alternative to **ABS** and if you're planning on storing your CNC in direct sunlight and want to use an "**ABS-**like" it is almost a must-have. Carbon fibre filled filaments allow extremely high levels of stiffness and can be paired with polymers like **PETG** and nylons for high thermal resilience but tend not to print overhangs very well and holes and bores tend to come out undersized.

LAYER HEIGHT :

The recommended layer height is 0.2 to 0.3 mm if this causes your printer to print too slowly for your liking, increase your line width to up to 120% of your nozzle diameter.

UPGRADE PRIORITY :

Most of the printed parts of the millennium minimill are designed to be printed first and then replaced with an aluminum part machined by yourself at your convenience. The upgrade priority however is our recommendation on what parts are most important to machine first and what parts might never need to be upgraded. There are 5 tiers to the upgrade priority and they go like this.

priority 1: very high priority. These parts should either be machined first before any others or you should skip the printed version completely and buy and or get someone else to machine them for you before you start building your machine.

priority 2: high priority. These parts provide a noticeable increase in the performance of the machine and can be machined by yourself after you build your machine first with printed parts.

priority 3: moderate priority. These upgrades won't provide a noticeable increase in performance but can increase the longevity of the parts.

priority 4: low priority these parts will not increase performance or are more difficult to machine an a 3 axis mill

priority 5: these parts are not worth reproducing in metal

PARTS LIST :

ESSENTIAL PARTS :

all parts in this list must be created in order to create a working machine

note: some parts are duplicates with different sizing for different configurations please only print the parts that you need.

PRINT LIST	INFILL	INFILL TYPE	MINIMUM WALL THICKNESS	RECOMMENDED MATERIAL	UPGRADE PRIORITY	SUPPORT REQUIREMENTS
X-AXIS-BEARING-BLOCK	40.00%	GYROID	2mm	PLA/ABS	3	NO
X-AXIS-MOTOR-MOUNT	40.00%	GYROID	2mm	PETG/ABS	3	NO
X-AXIS-ANTI-BACKLASH-NUT	60.00%	GYROID	2.5mm	PETG/ABS	4	NO
XY-AXIS-MOUNTING-PLATE	80.00%	GYROID	2.5mm	PLA/ABS	1	NO
Y-AXIS-BEARING-BLOCK	40.00%	GYROID	2mm	PLA/ABS	3	YES
Y-AXIS-MOTOR-MOUNT	40.00%	GYROID	2mm	PETG/ABS	3	YES
Y-AXIS-ANTI-BACKLASH-NUT	60.00%	GYROID	2mm	PETG/ABS	5	NO
Z-AXIS-BEARING-BLOCK	40.00%	GYROID	2mm	PLA/ABS	3	NO
Z-AXIS-MOTOR-MOUNT-NEMA-23	60.00%	GYROID	2.5mm	PLA/ABS	3	NO
Z-AXIS-MOTOR-MOUNT-NEMA-17	40.00%	GYROID	2mm	PLA/ABS	3	NO
Z-AXIS-ANTI-BACKLASH-NUT	60.00%	GYROID	2mm	PETG/ABS	5	NO
Z-AXIS-MOUNTING-PLATE	80.00%	GYROID	2.5mm	PLA/ABS	1	NO
DEWALT-ROUTER-MOUNT-70MM-PART-A	60.00%	GYROID	2mm	PETG/ABS	4	NO
DEWALT-ROUTER-MOUNT-70MM-PART-B	60.00%	GYROID	2mm	PETG/ABS	4	NO
SPINDLE-MOUNT-65MM-PART-A	60.00%	GYROID	2mm	PETG/ABS	4	NO
SPINDLE-MOUNT-65MM-PART-B	60.00%	GYROID	2mm	PETG/ABS	4	NO

JOINT-PLATE-A	40.00%	GYROID	2.5mm	PLA/ABS	2	NO
JOINT-PLATE-B	40.00%	GYROID	2.5mm	PLA/ABS	2	NO
JOINT-PLATE-C	40.00%	GYROID	2.5mm	PLA/ABS	2	NO
JOINT-PLATE-A-MIRROR	40.00%	GYROID	2.5mm	PLA/ABS	2	NO
JOINT-PLATE-B-MIRROR	40.00%	GYROID	2.5mm	PLA/ABS	2	NO
JOINT-PLATE-C-MIRROR	40.00%	GYROID	2.5mm	PLA/ABS	2	NO

This page is intentionally left blank

Y AXIS ASSEMBLY

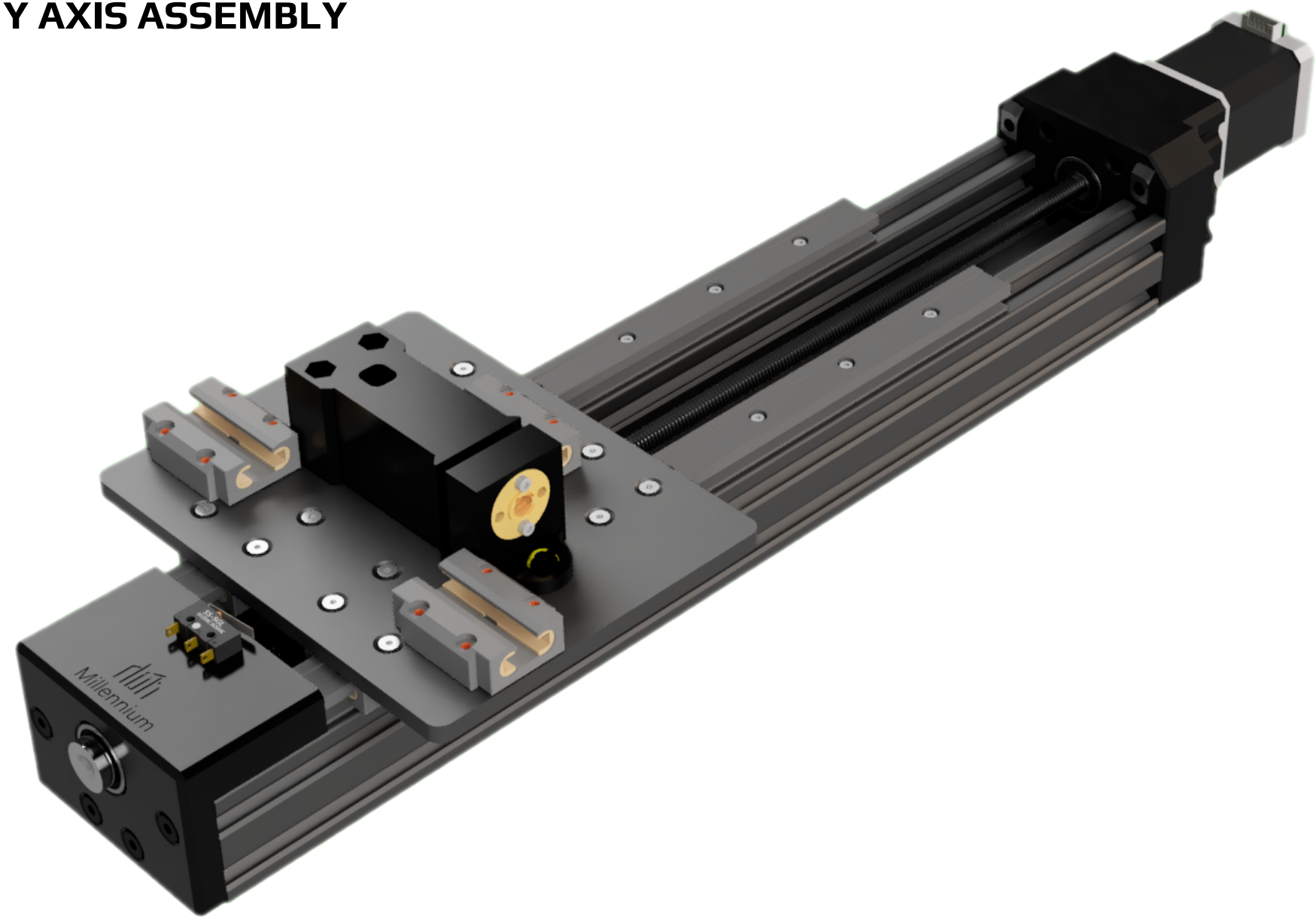

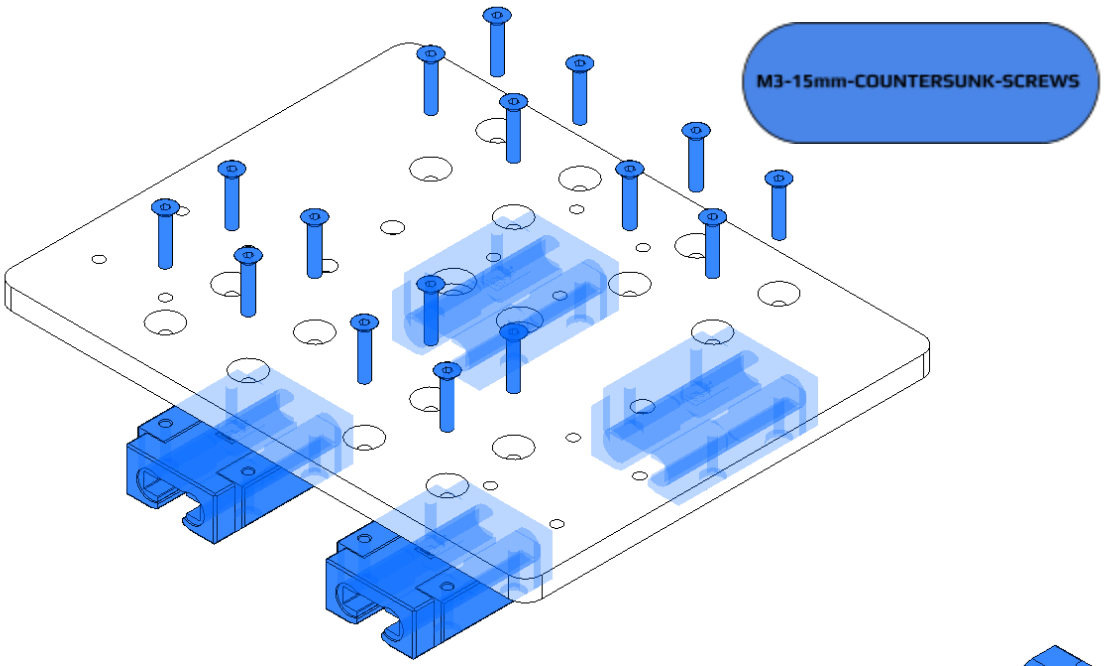

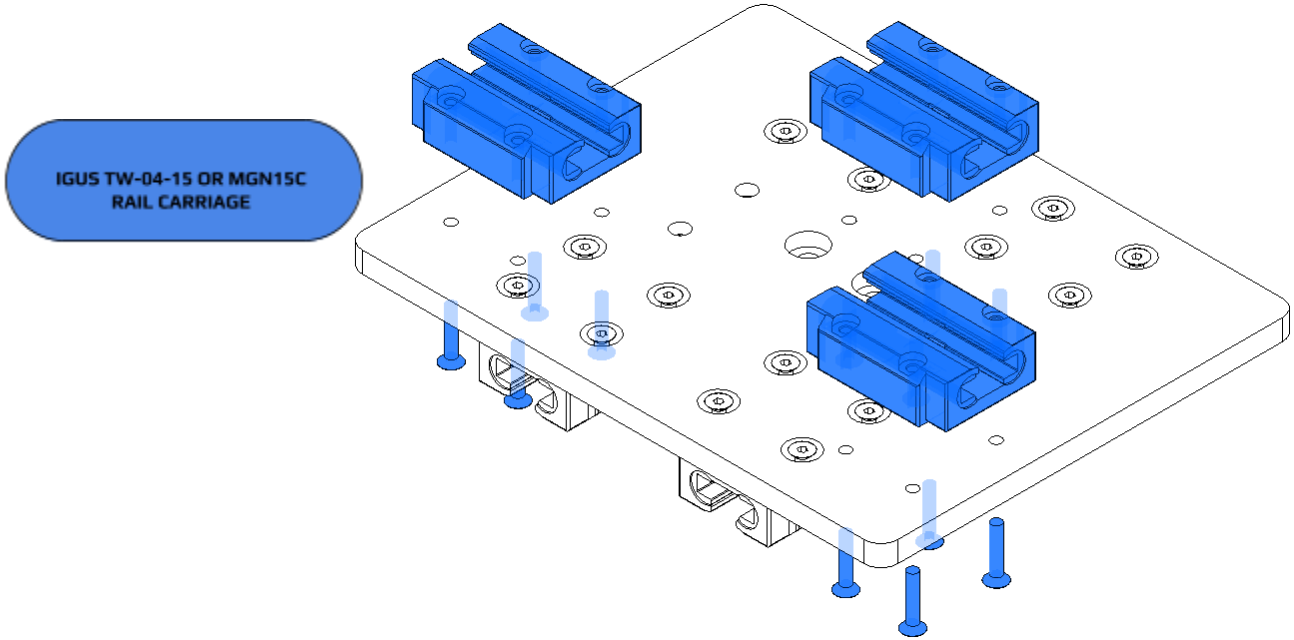

BE SAFE , LOCTITE IT !

These machines vibrate an immense amount When in use and fasteners are bound to back out. Don't be afraid to add a little bit of loctite to all your screws to avoid this problem

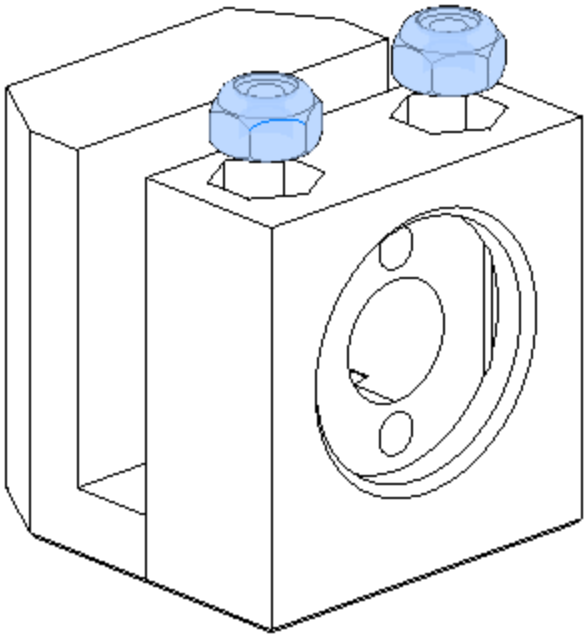

M5-NYLOC-NUT

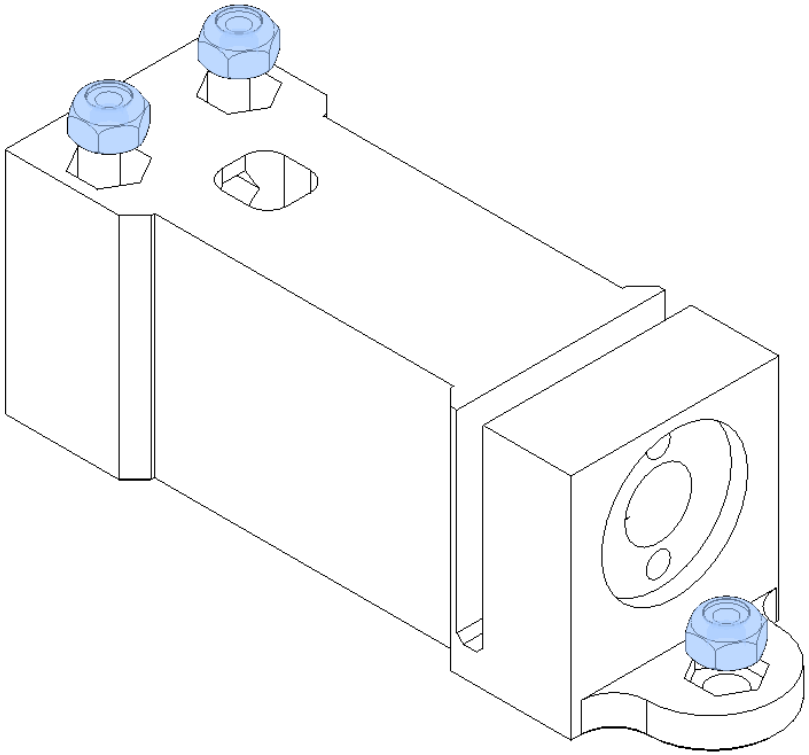

WORK SMART NOT HARD

Some assembly steps require you to place nyloc nuts in weird and wonderful places.

If you start to struggle with your nuts falling out all over the place don't fret, a small dab of superglue can help keep all your bits in place until you're ready to screw in your bolts.

M5-12mm-LOW-PROFILE

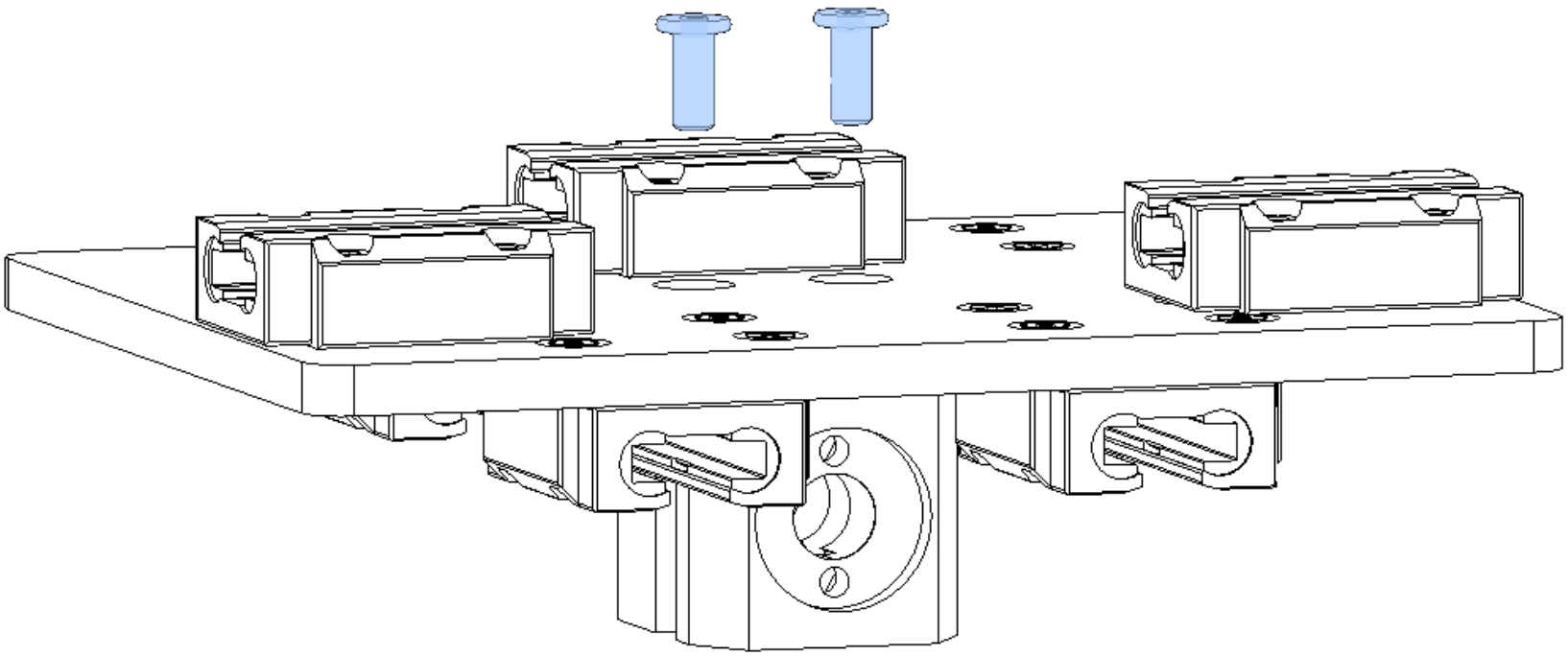

ORDER OF EVENTS

The installation of some parts will block access to others.

To avoid having to disassemble parts that you've spent the last 2 hours putting together, pay close attention to the order in which each part needs to be assembled and make sure it's done correctly before moving on to the next step.

DON'T OVER TIGHTEN

It may not feel like much but your hands can be powerful things. Over tightening things can lead to striped threads, broken bolts and even on occasion can affect the dimensions of even metal parts.

A combination of loctite and nyloc nuts are more than enough to keep your screws in place so there is no need to over tighten anything.

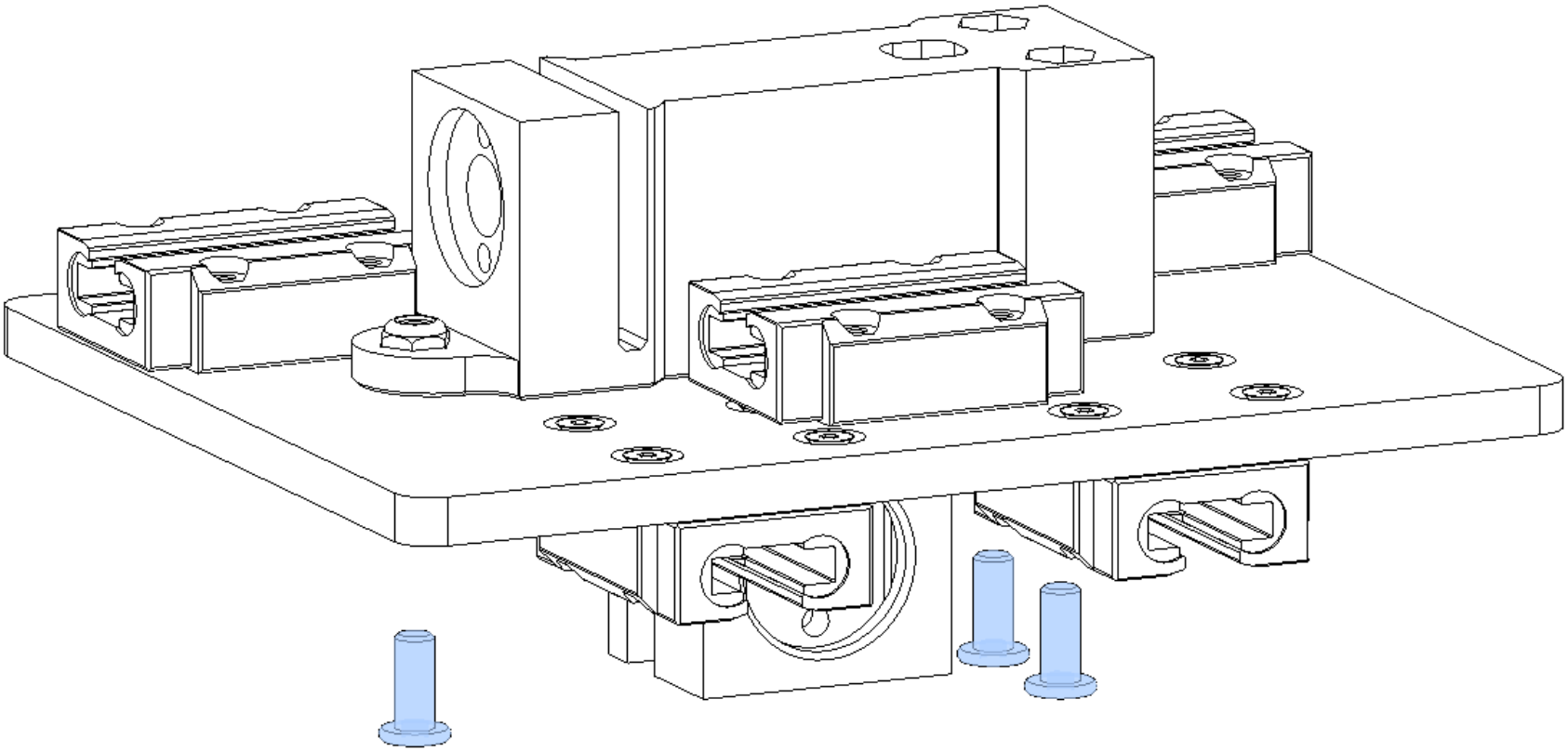

M5-12mm-LOW-PROFILE

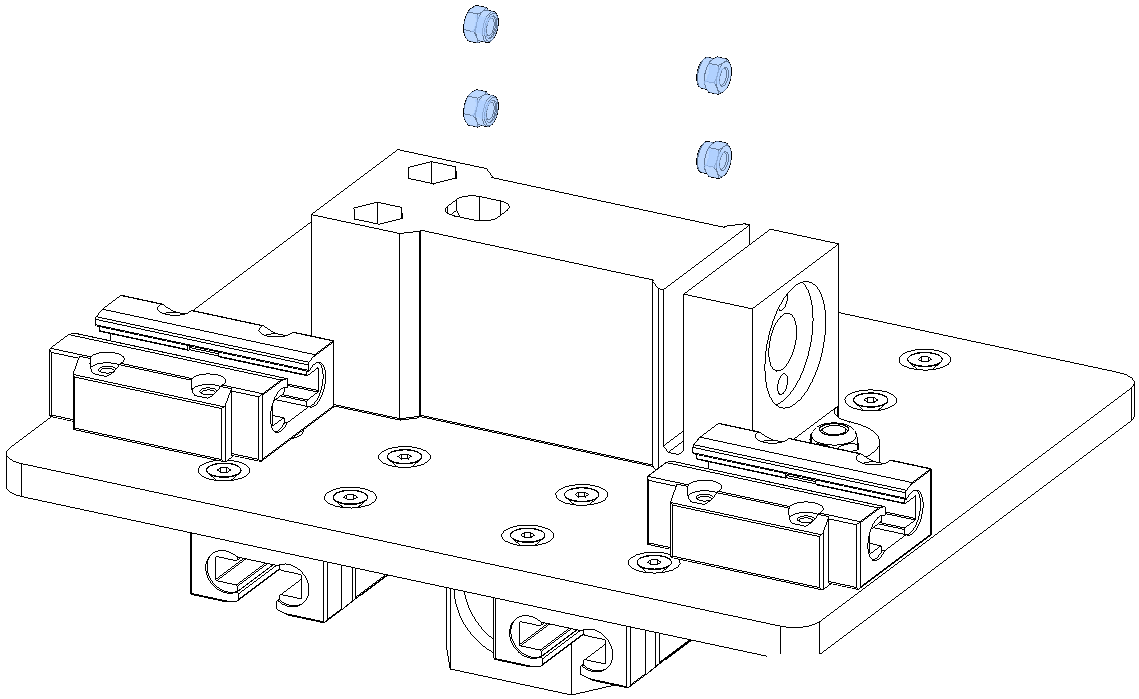

BLIND FASTENERS

A multitude of components in this build use blind nut placements in tight spaces. In these cases a pair of long tweezers are a must... or you know freakishly small hands will work too.

M3-NYLOC-NUT

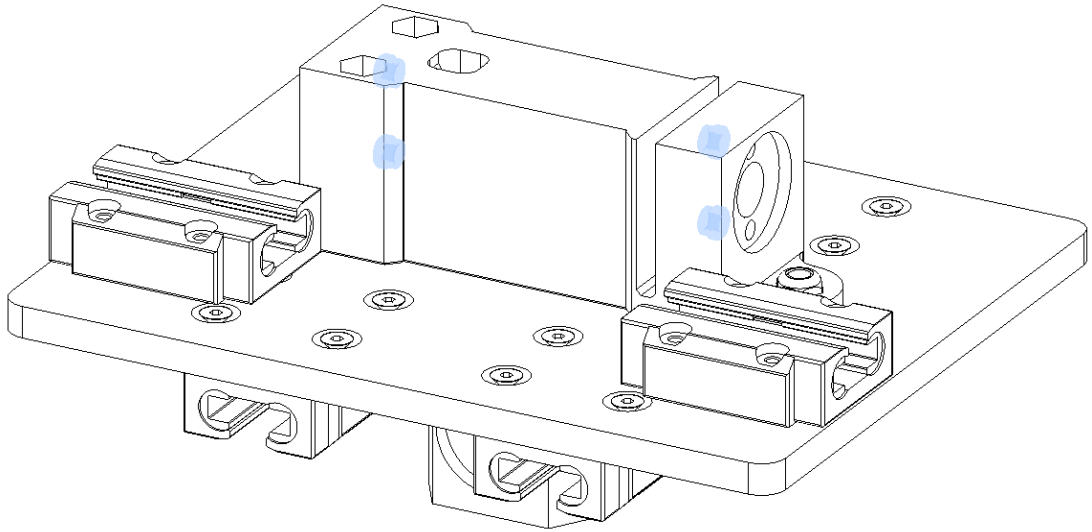

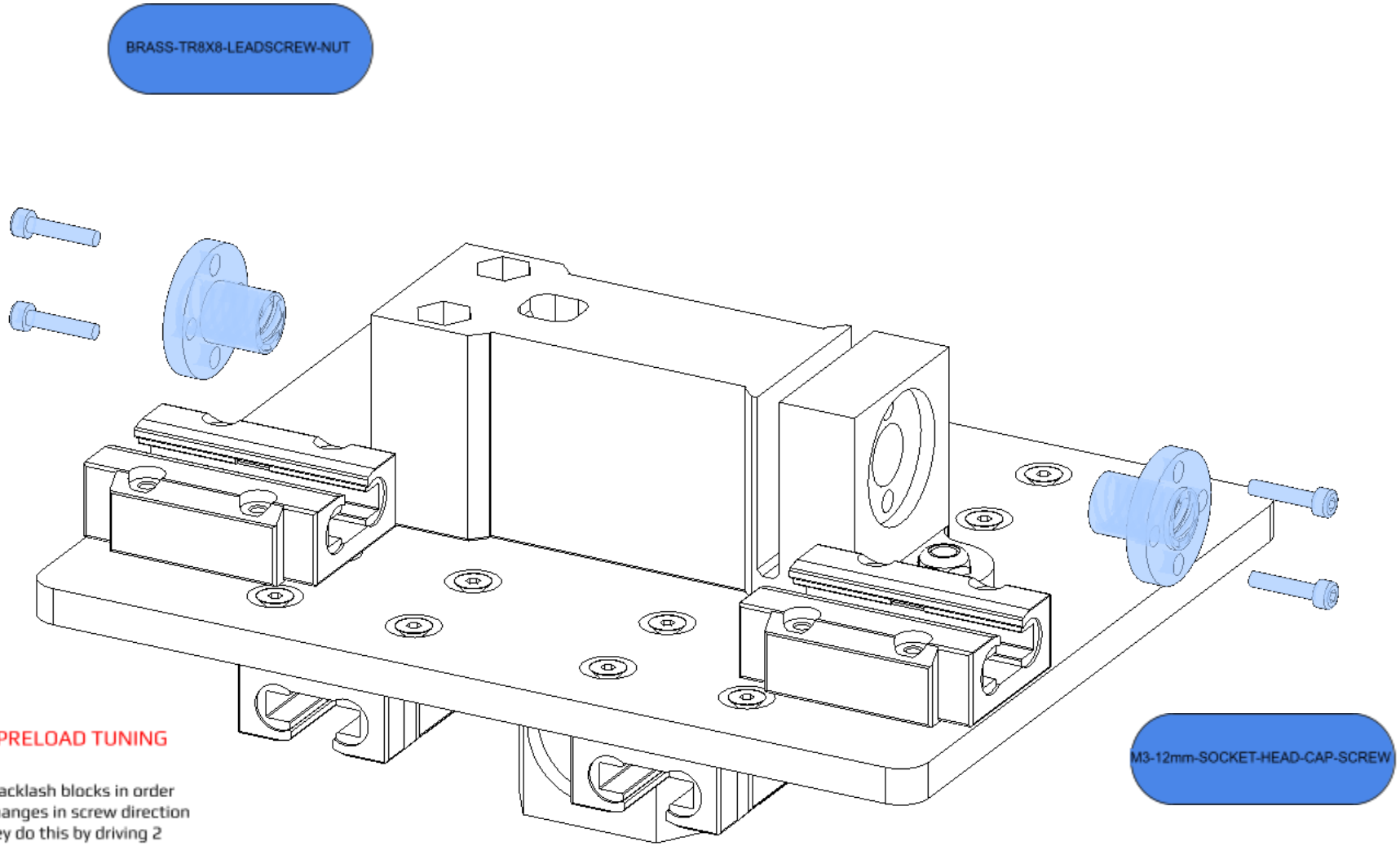

ANTI-BACKLASH PRELOAD TUNING

Each axis uses anti-backlash blocks in order to compensate for changes in screw direction during operation. They do this by driving 2 brass TR8x8 lead screw nuts towards each other to engage both sides of the lead screws threads.

In order for this to work the preload required to drive each nut needs to be tuned by hand.

To tune the preload, loosely install the 2 brass TR8x8 lead screw nuts within the anti backlash block without tightening the bolts too much.

Then install a spare lead screw temporarily in the block and begin to tighten each brass nut equally.

The ideal preload will allow for the leadscrew to still spin by hand but should have a moderate amount of resistance to it.

Once complete uninstall the leadscrew and your preload is now set.

To avoid any headaches attempt to do this before final installation.

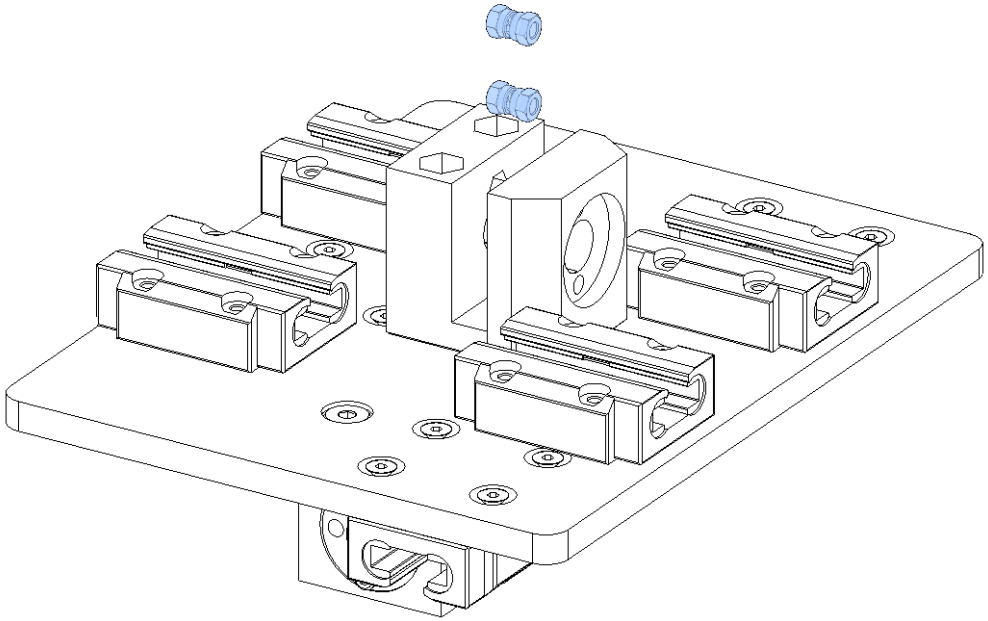

M3-NYLOC-NUT

CHECK YOUR FASTENERS

It's a good time now to double check that all your fasteners are tight and that all your carriages and blocks are secure because going forward access to the XY plate assembly is limited.

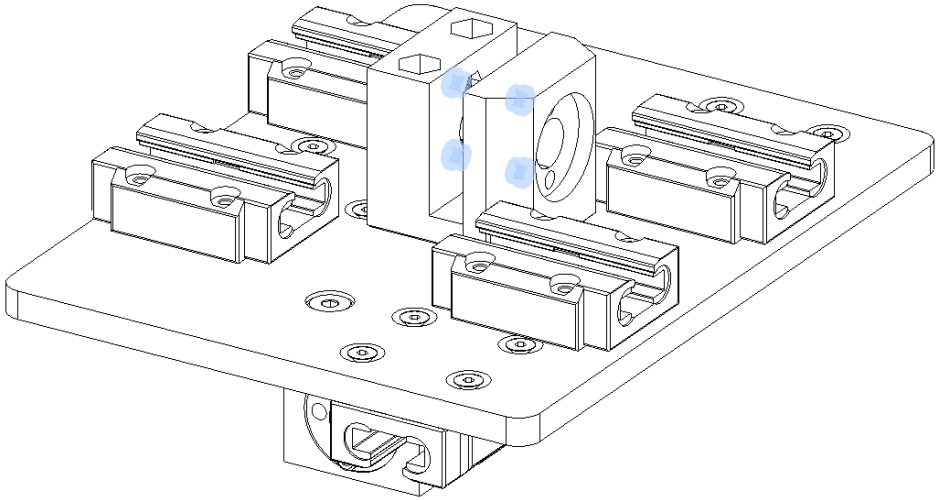

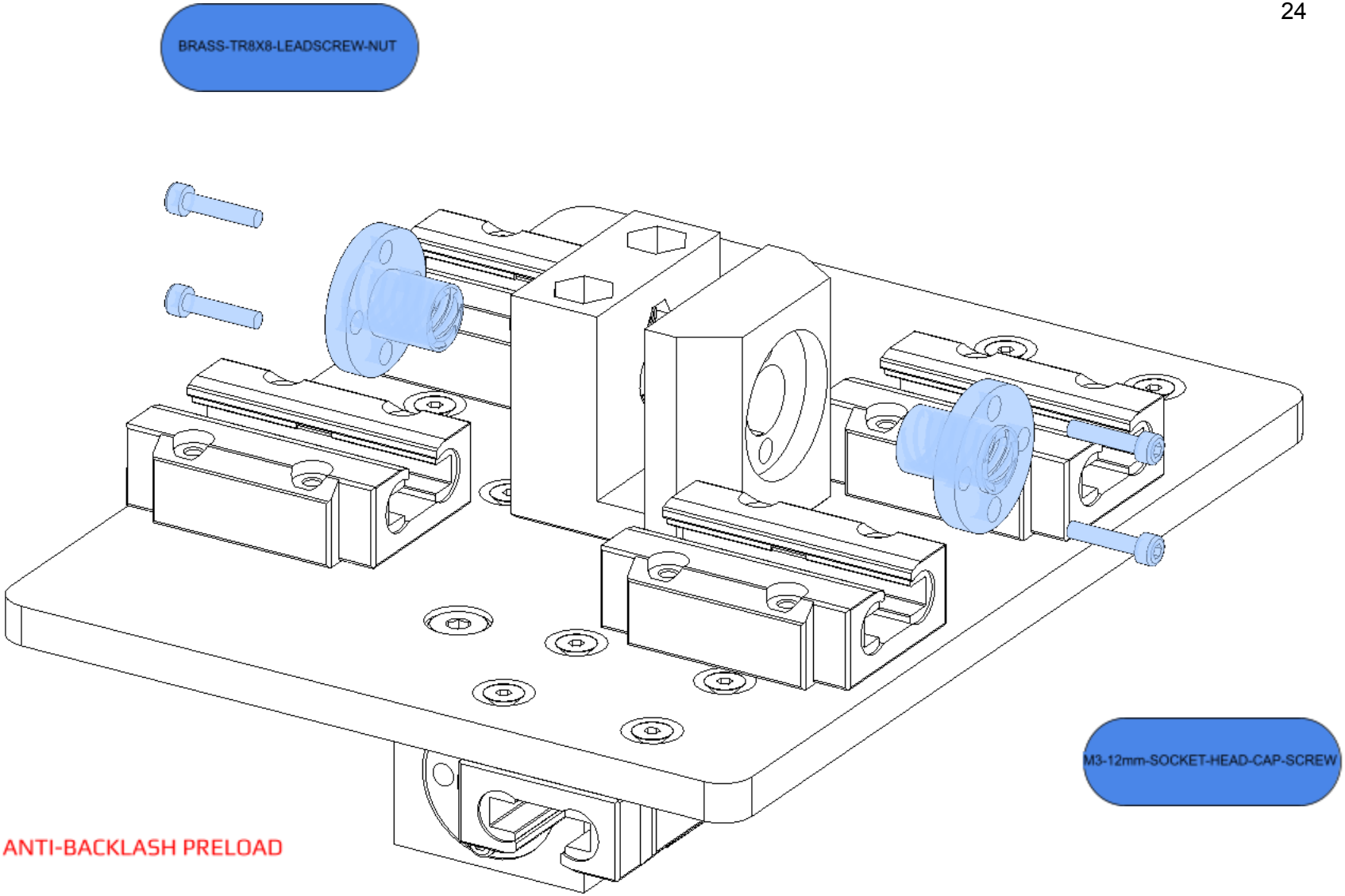

REPEAT ANTI-BACKLASH PRELOAD TUNING

Repeat the steps used to tune in the anti-backlash preload found on page 22

ASSEMBLE YOUR Y SCREW

Assemble your y screw by attaching it to a nema 17 motor with an 8mm to 5mm spider coupler.

Don't forget to tighten the grub screws.

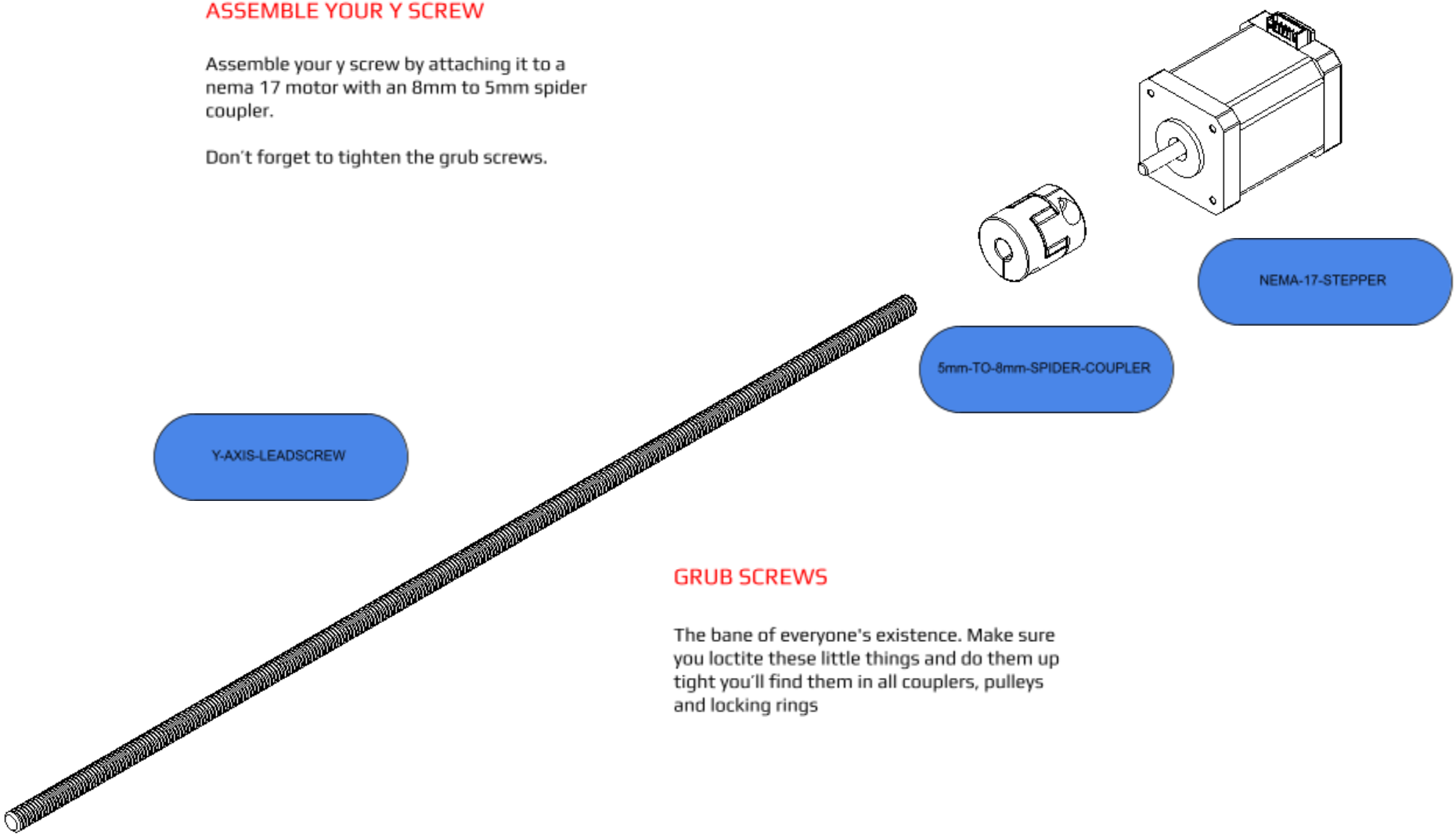

GRUB SCREWS

The bane of everyone's existence. Make sure you loctite these little things and do them up tight you'll find them in all couplers, pulleys and locking rings

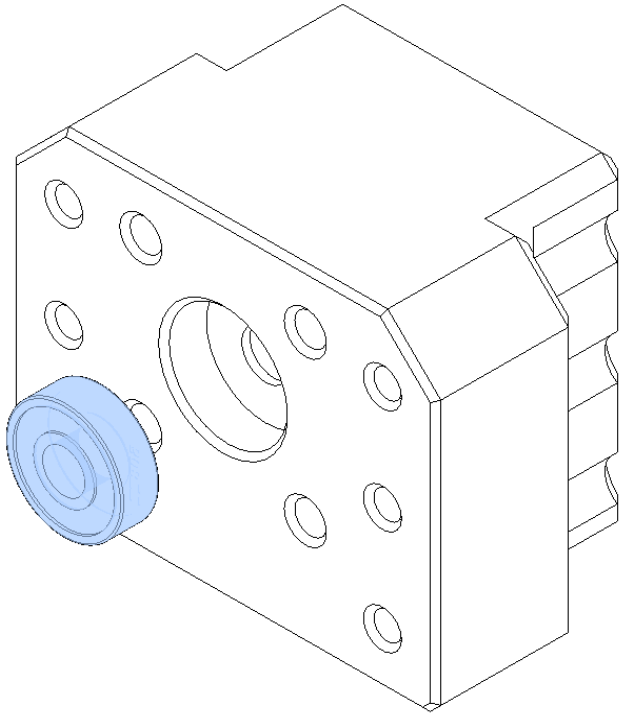

608ZZ-BEARING

SEALED BEARINGS

Sealed bearings may cost a little more than normal ball bearings but they are well worth the extra price remember these bearings come in contact with a lot of chips from cutting and open bearings will jam

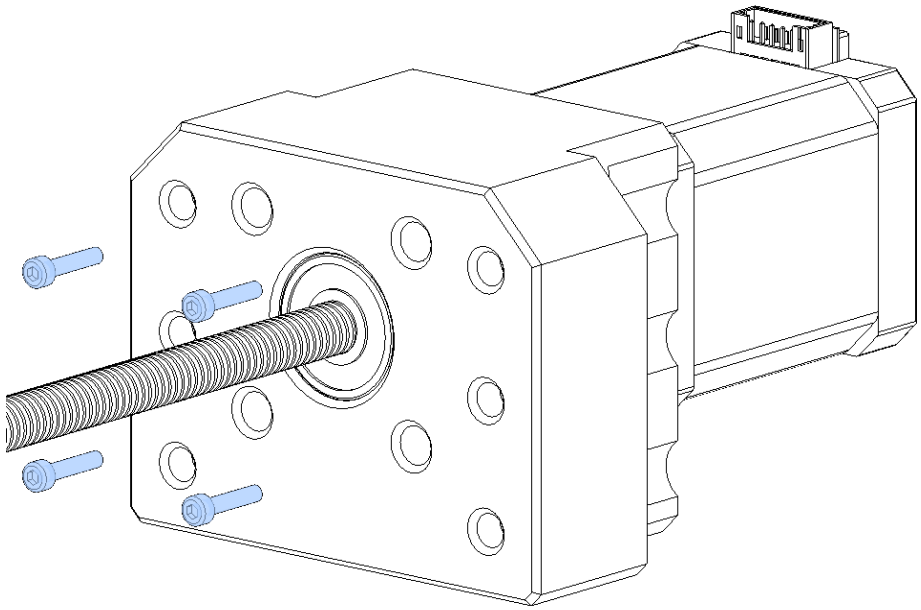

CHECK YOUR FASTENERS

It's a good time now to double check that all your fasteners are tight because going forward access to the Y motor mount assembly is limited.

M3-12mm-SOCKET-HEAD-CAP-SCREW

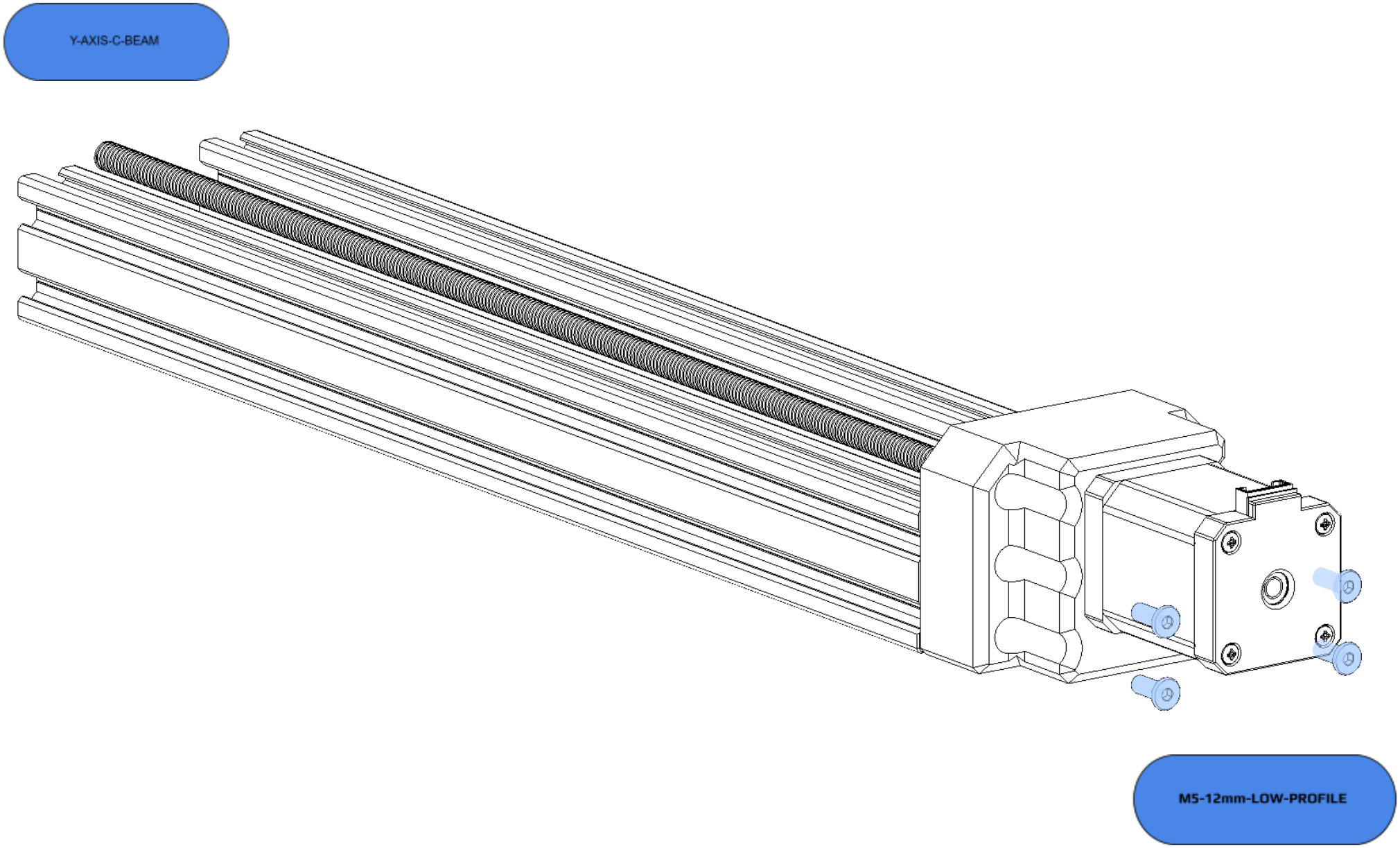
Y-AXIS-C-BEAM
M5-12mm-LOW-PROFILE

HEAT INSERTS

Heat inserts are required to be pressed into solid plastic parts in order to create a more permanent threads in plastic.

You will most likely require a soldering iron to assist with this step.

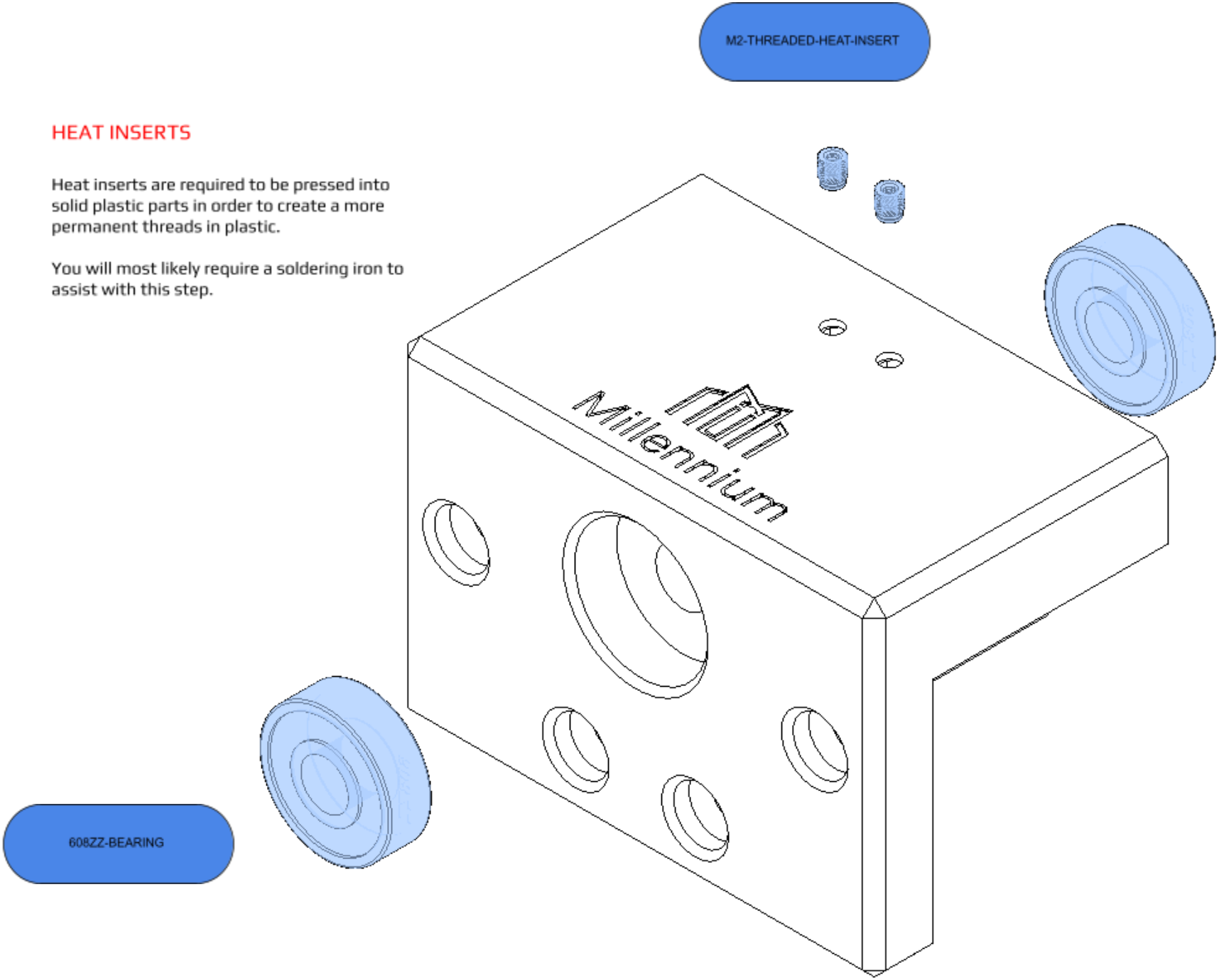

TEMPORARY ASSEMBLY

The installation of the Y axis bearing block is only temporary for now as it is used as a stop to align the Y axis linear rails.

There is no need to secure it with fasteners at this point.

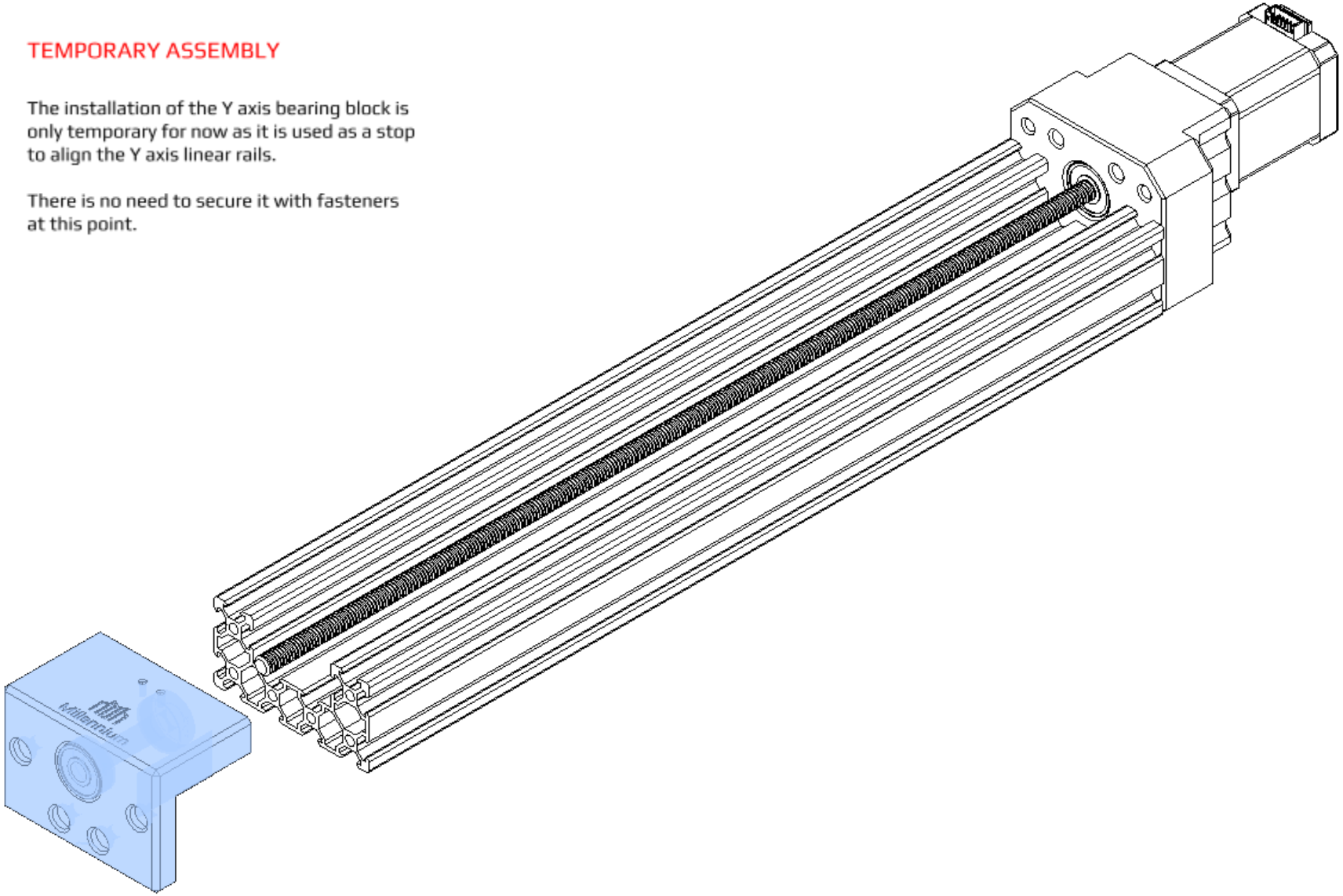

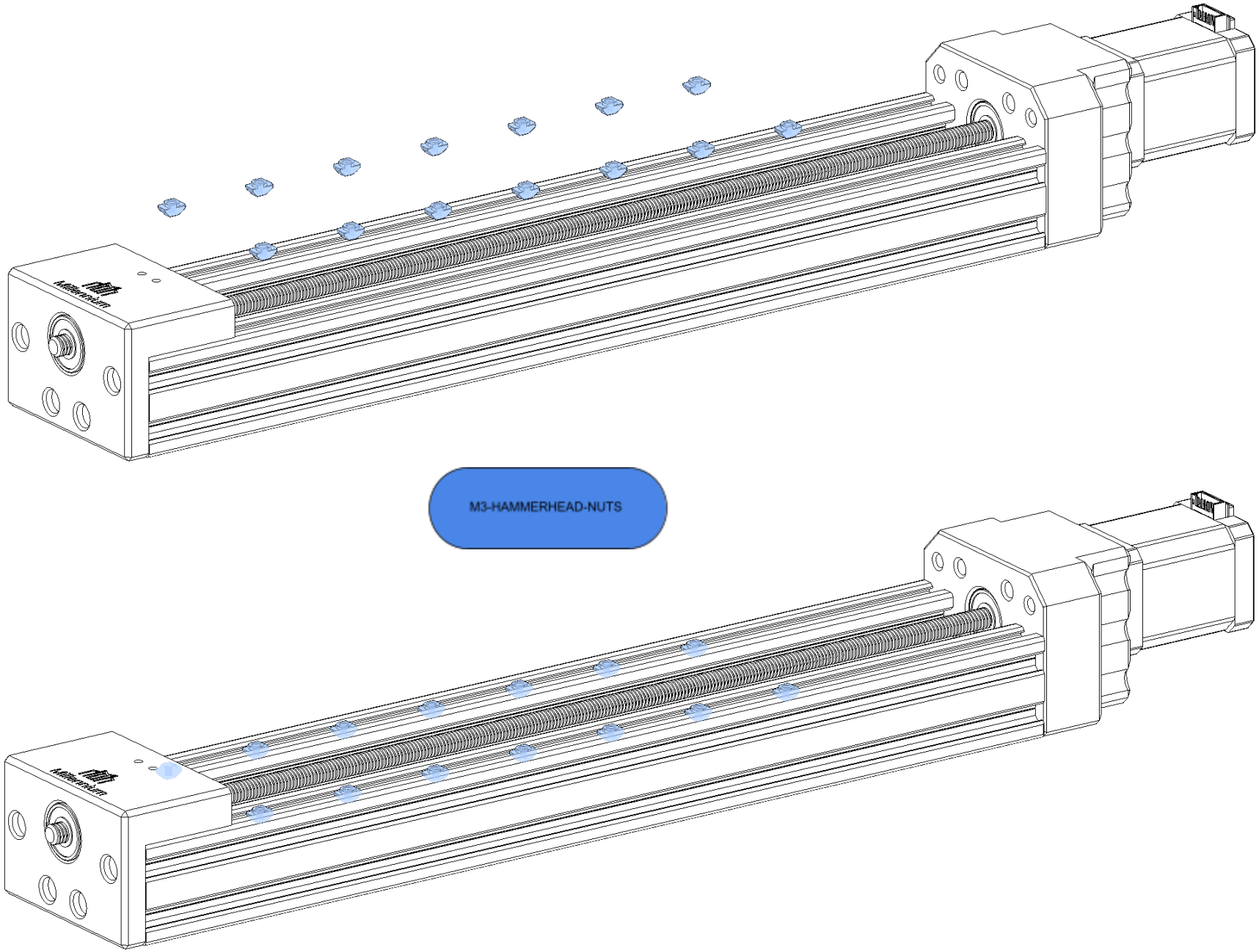
M3-HAMMERHEAD-NUTS

Y AXIS RAIL ASSEMBLY

To install the rails to the Y axis C-beam first use the Y axis bearing block as a stop, ensure the rails are parallel to each other and then you may begin tightening screws from the outsides in.

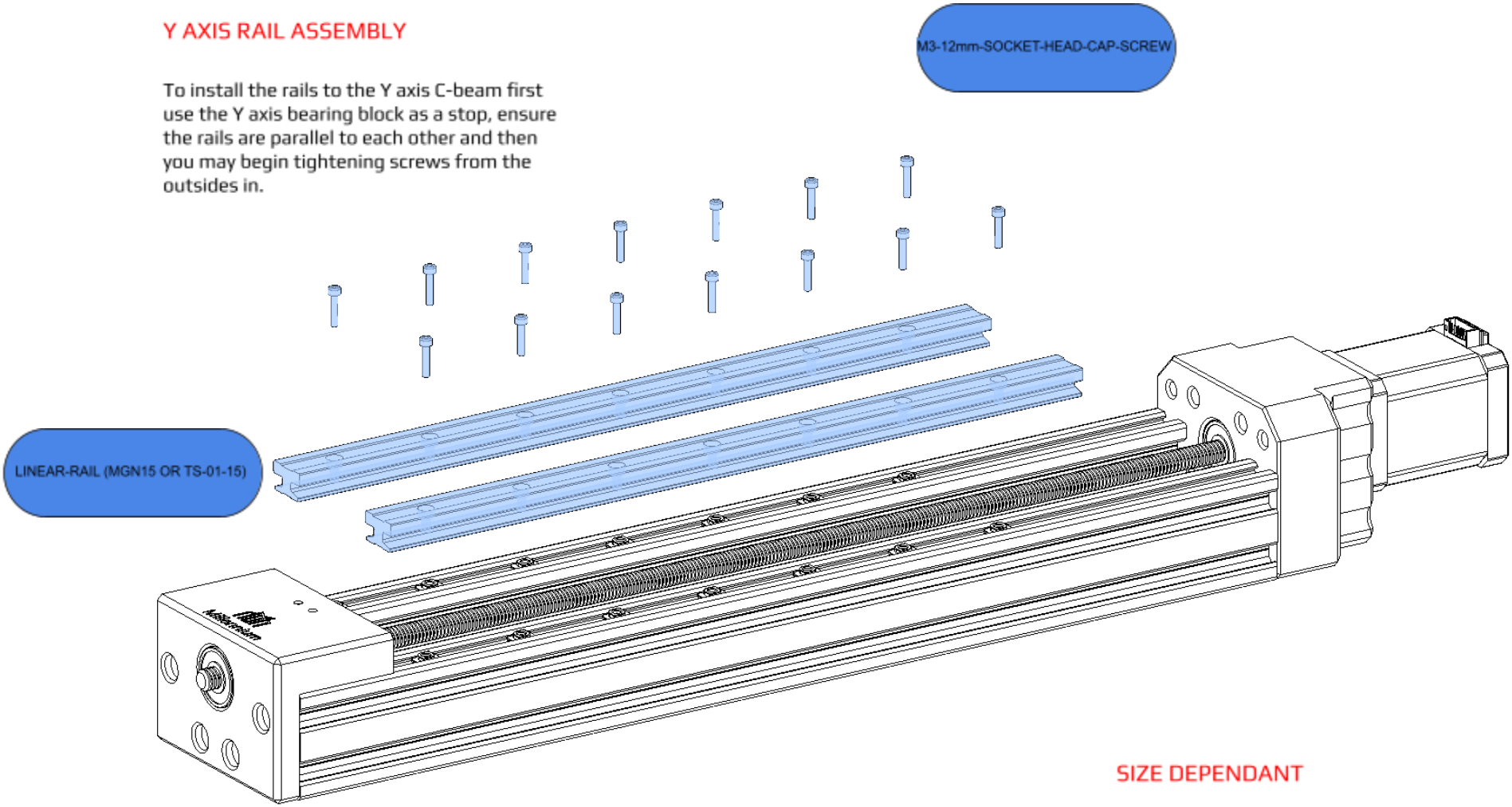

SIZE DEPENDANT

The amount of screws and hammerhead bolts used here is dependant on the size of your build do not use the amount of fasteners shown in the manual as a guide

REMOVE THE TEMPORARY PART

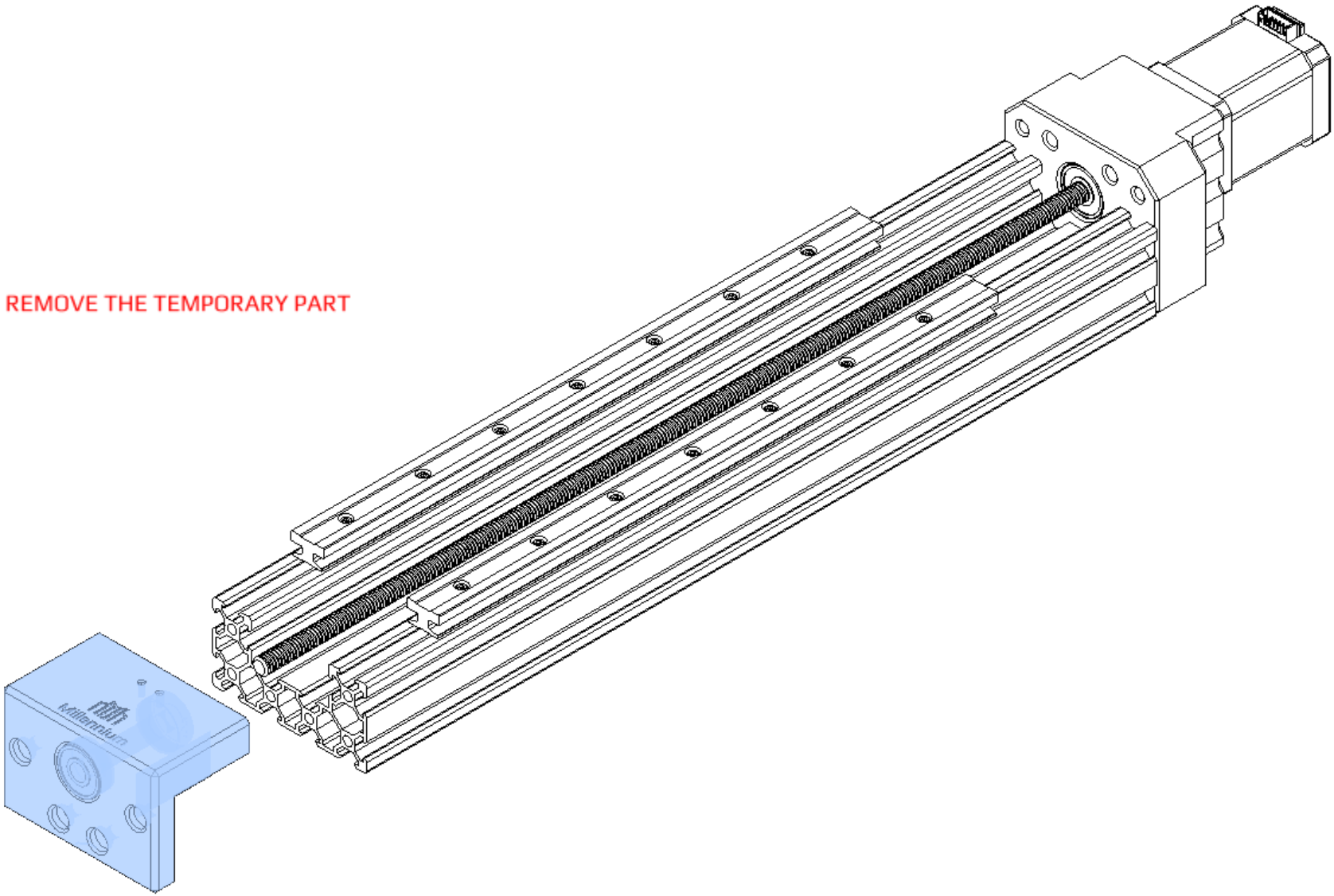

INSTALL THE XY GANTRY PLATE

To install the XY gantry plate begin by lining up the carriages with the rails and start to slide the plate assembly onto the rails.

At the same time align the Y axis screw to the nut block. Once the screw makes contact with the nut block, begin to rotate the screw until the threads engage.

Continue to rotate the screw until all carriages are riding on the rails.

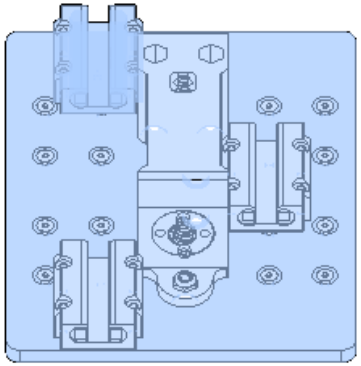

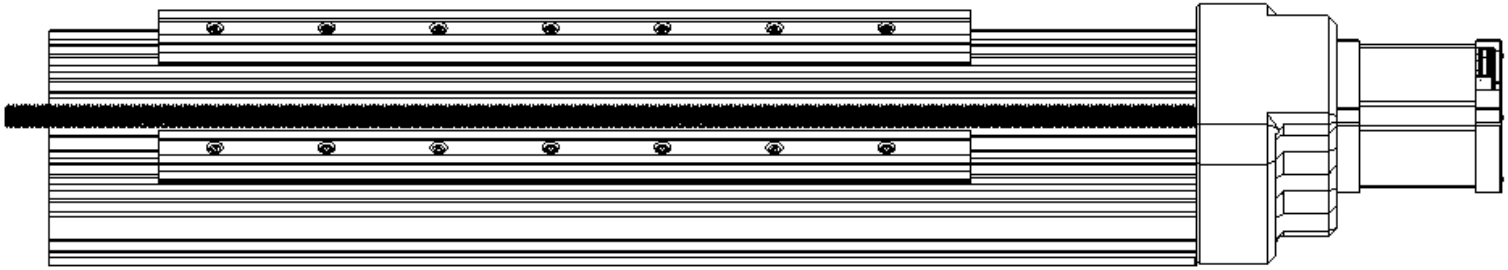

INSTALL AN 8mm LOCKING RING ON THE SCREW

Make sure not to tighten the grub screw until the the Y axis bearing block has been reinstalled permanently.

Press up on the internal ball bearing before tightening

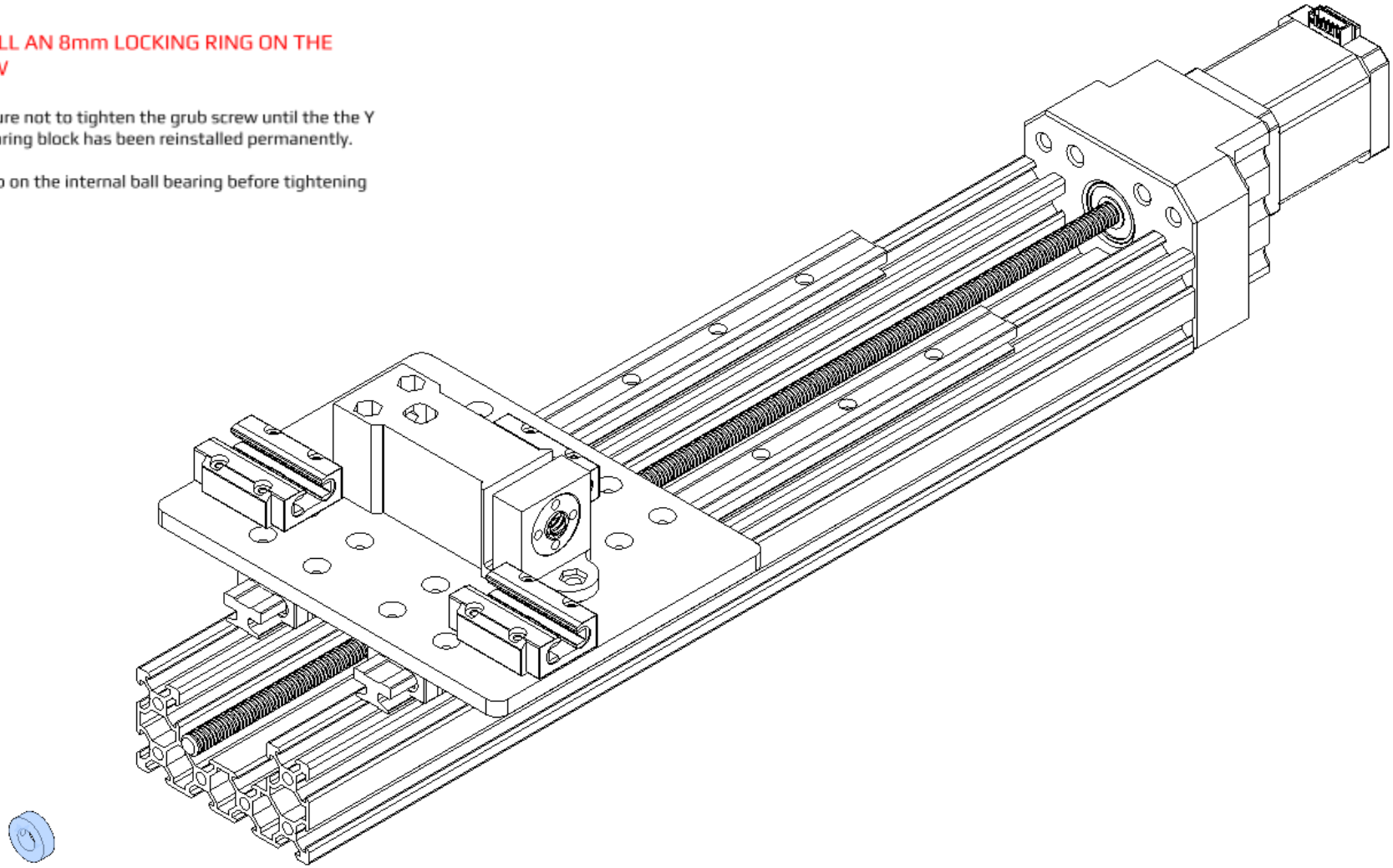

8mm-BORE-LOCKING-RING

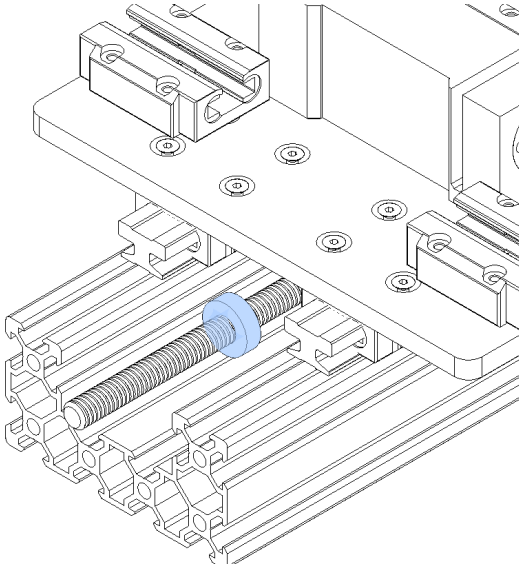

REINSTALL BEARING BLOCK AND ADD LOCKING RING

Reinstall the bearing block for the final time into the assembly and install a locking ring pressing against the outside bearing.

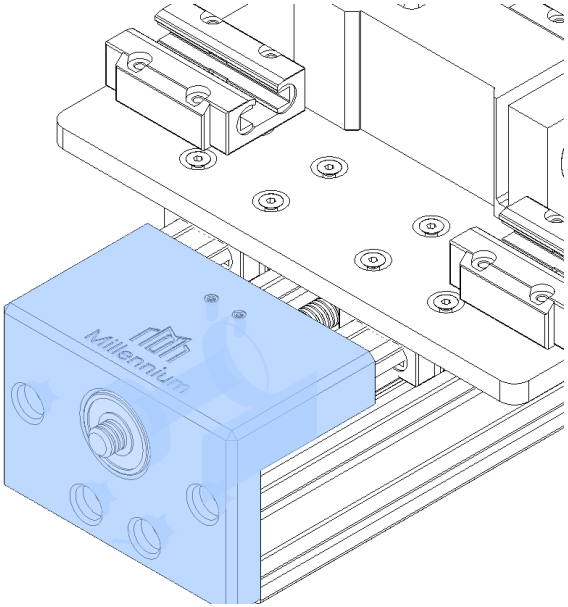

8mm-BORE-LOCKING-RING

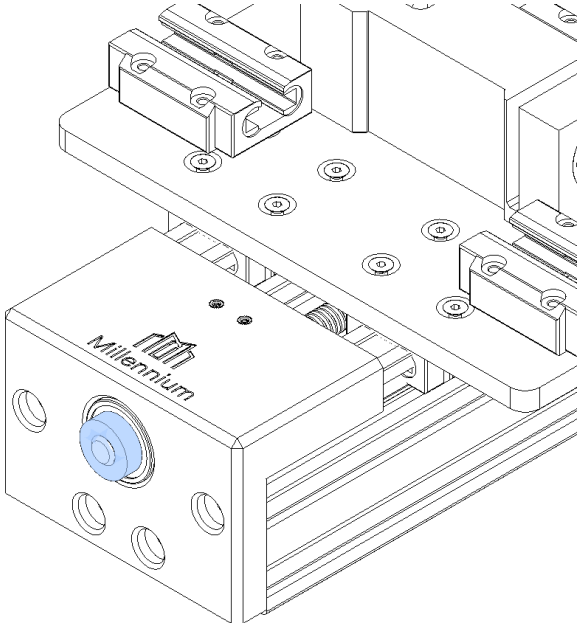

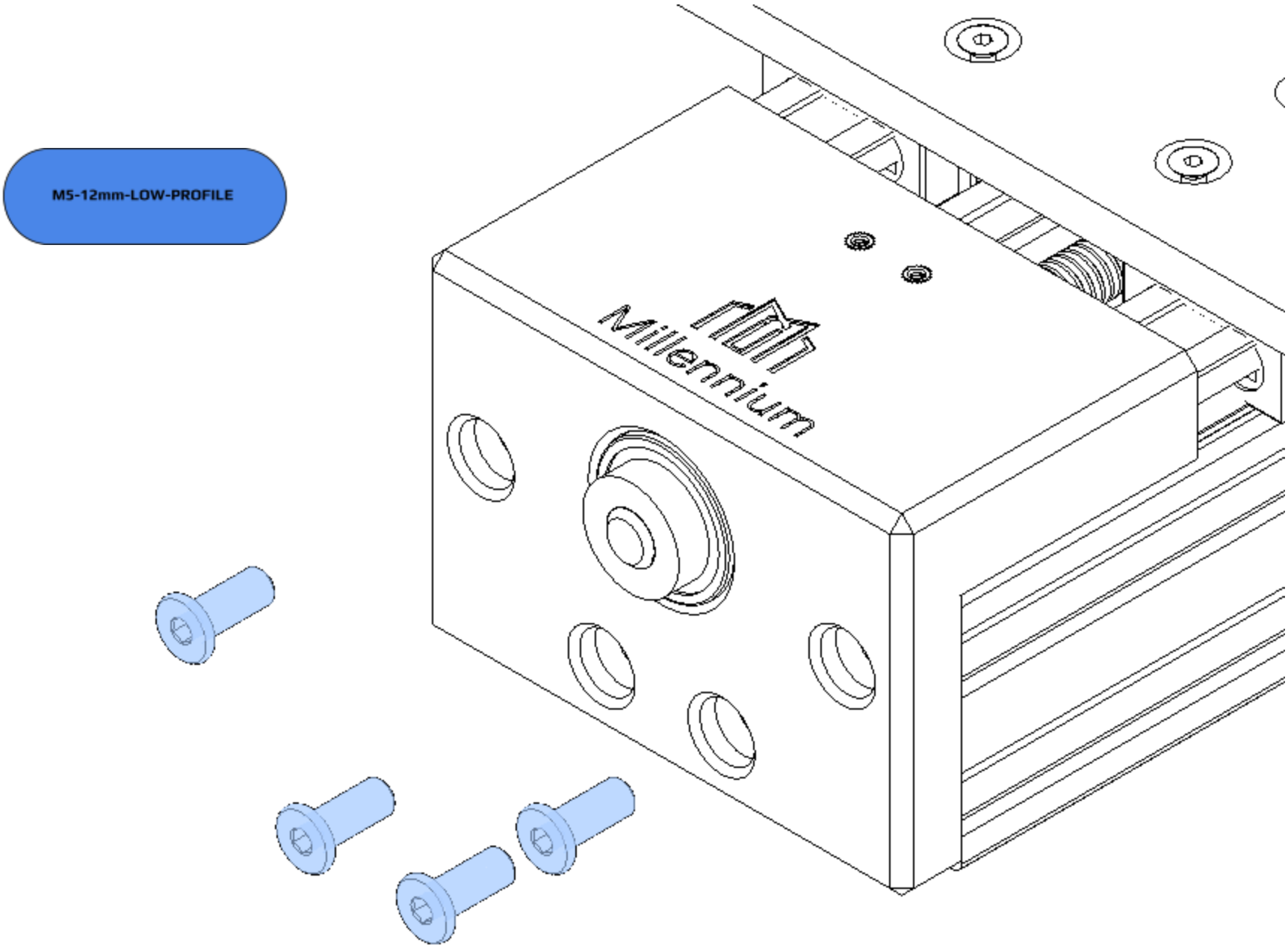
M5-12mm-LOW-PROFILE
Millennium

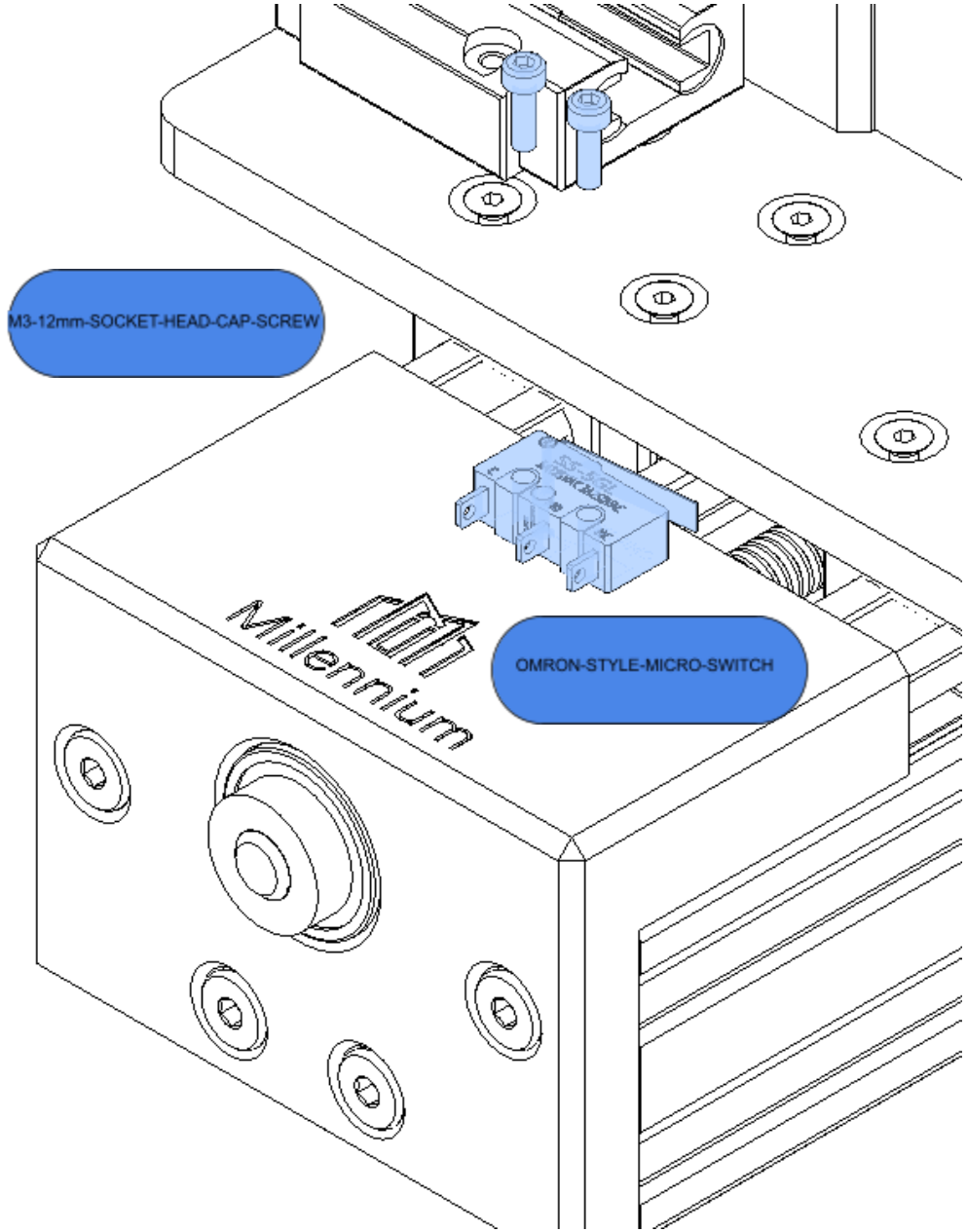
M3-12mm-SOCKET-HEAD-CAP-SCREW
OMRON-STYLE-MICRO-SWITCH
Millennium

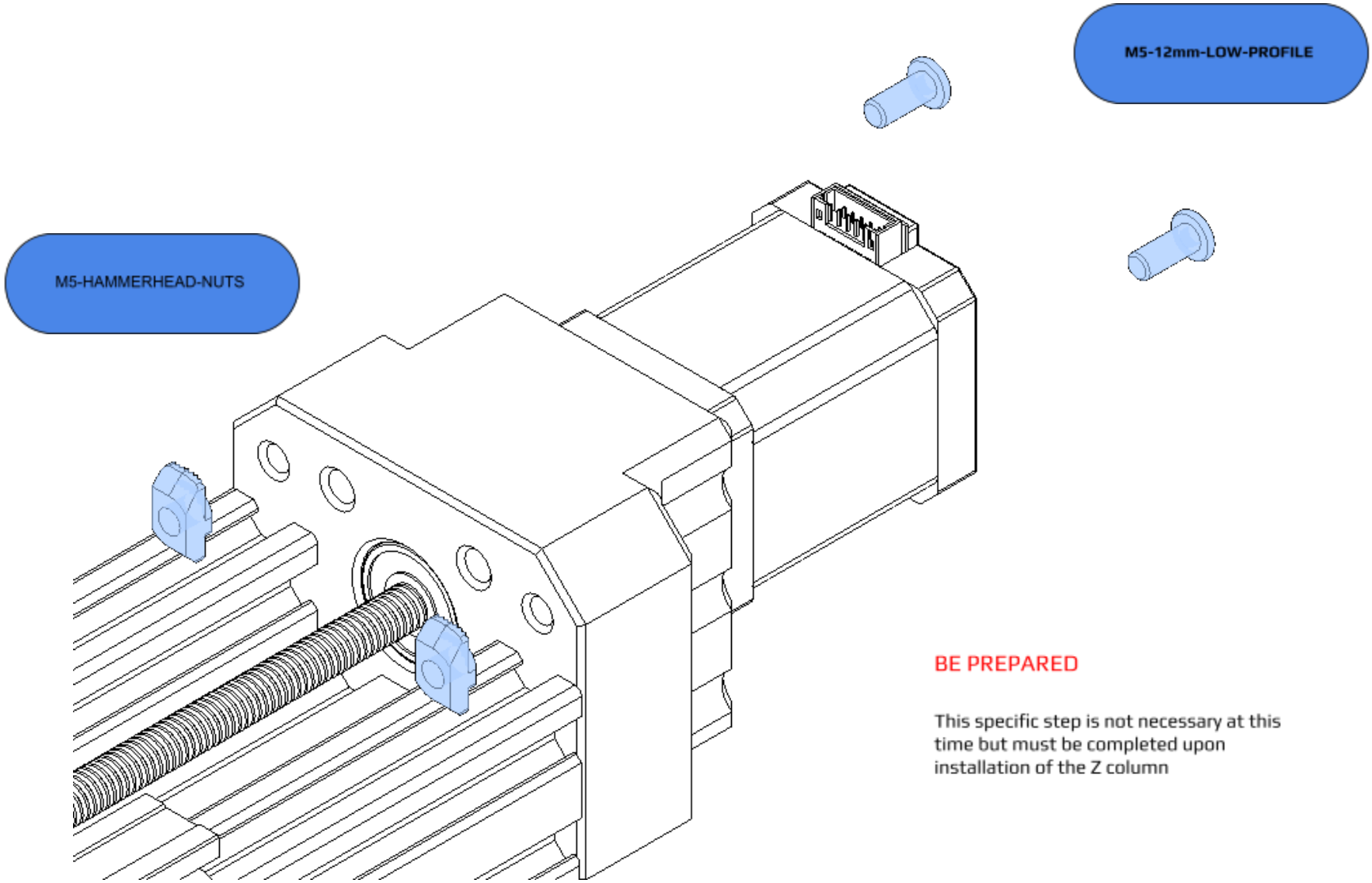

BE PREPARED

This specific step is not necessary at this time but must be completed upon installation of the Z column

This page is intentionally left blank

X AXIS ASSEMBLY

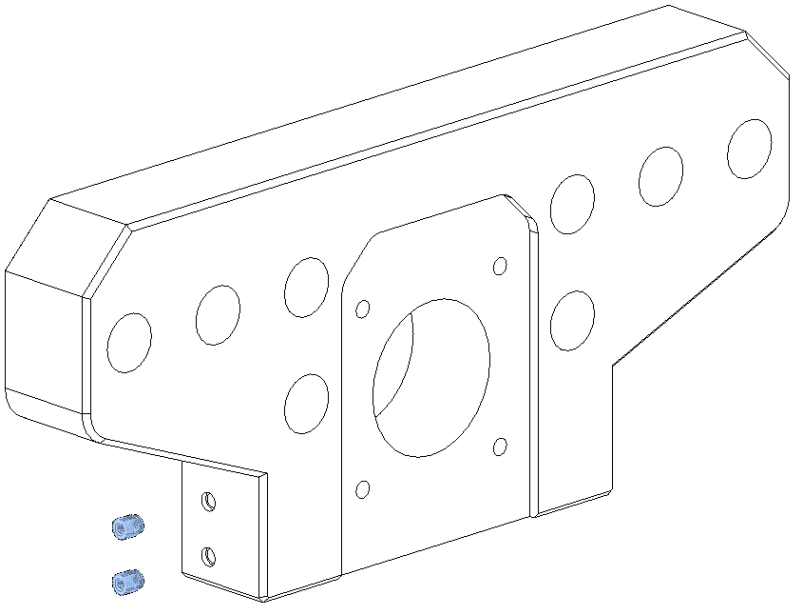

M2-THREADED-HEAT-INSERT

HEAT INSERTS

Heat inserts are required to be pressed into solid plastic parts in order to create a more permanent threads in plastic.

You will most likely require a soldering iron to assist with this step.

NEMA-17-STEPPER

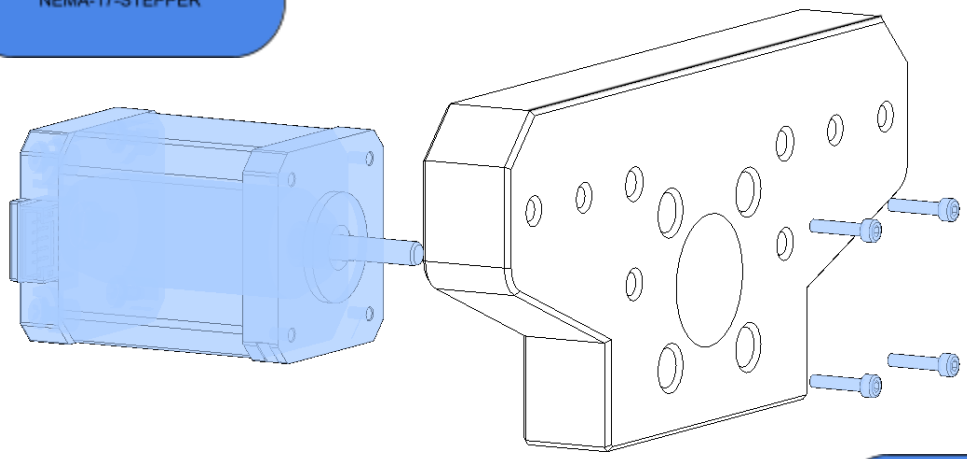

M3-12mm-SOCKET-HEAD-CAP-SCREW

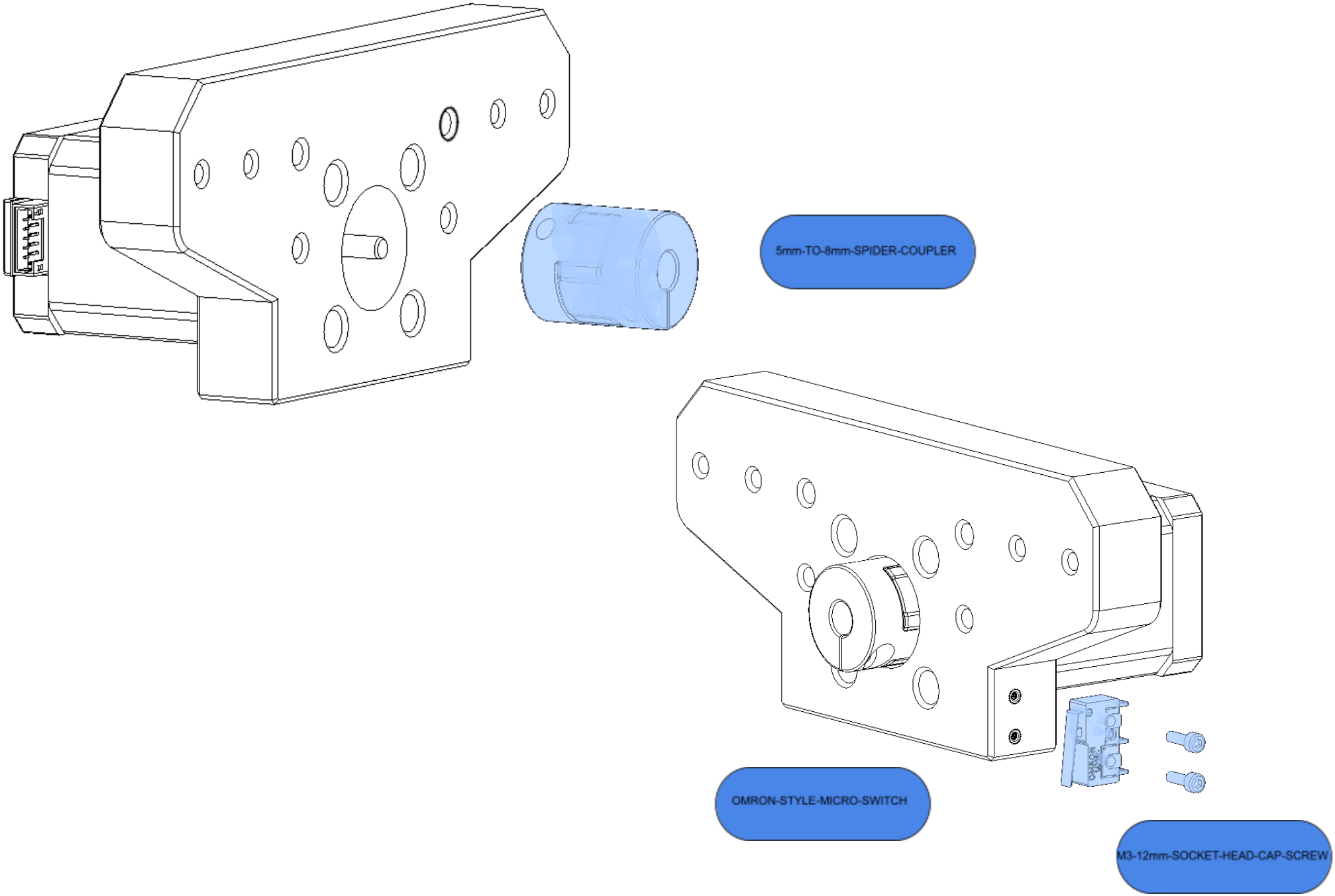
5mm-TO-8mm-SPIDER-COUPLER
OMRON-STYLE-MICRO-SWITCH
M3-12mm-SOCKET-HEAD-CAP-SCREW

SIZE DEPENDANT

The amount of screws and hammerhead bolts used here is dependant on the size of your build do not use the amount of fasteners shown in the manual as a guide

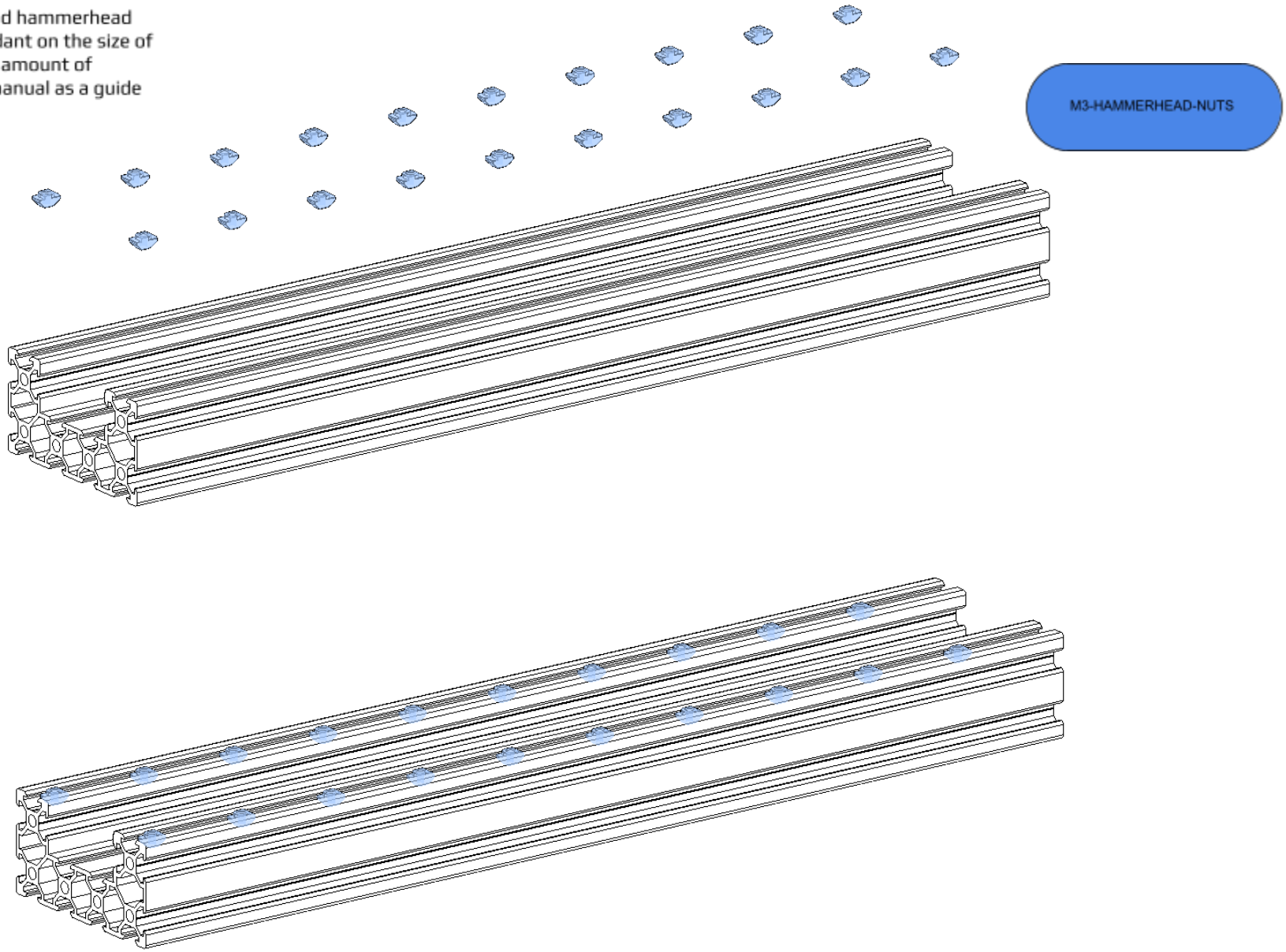

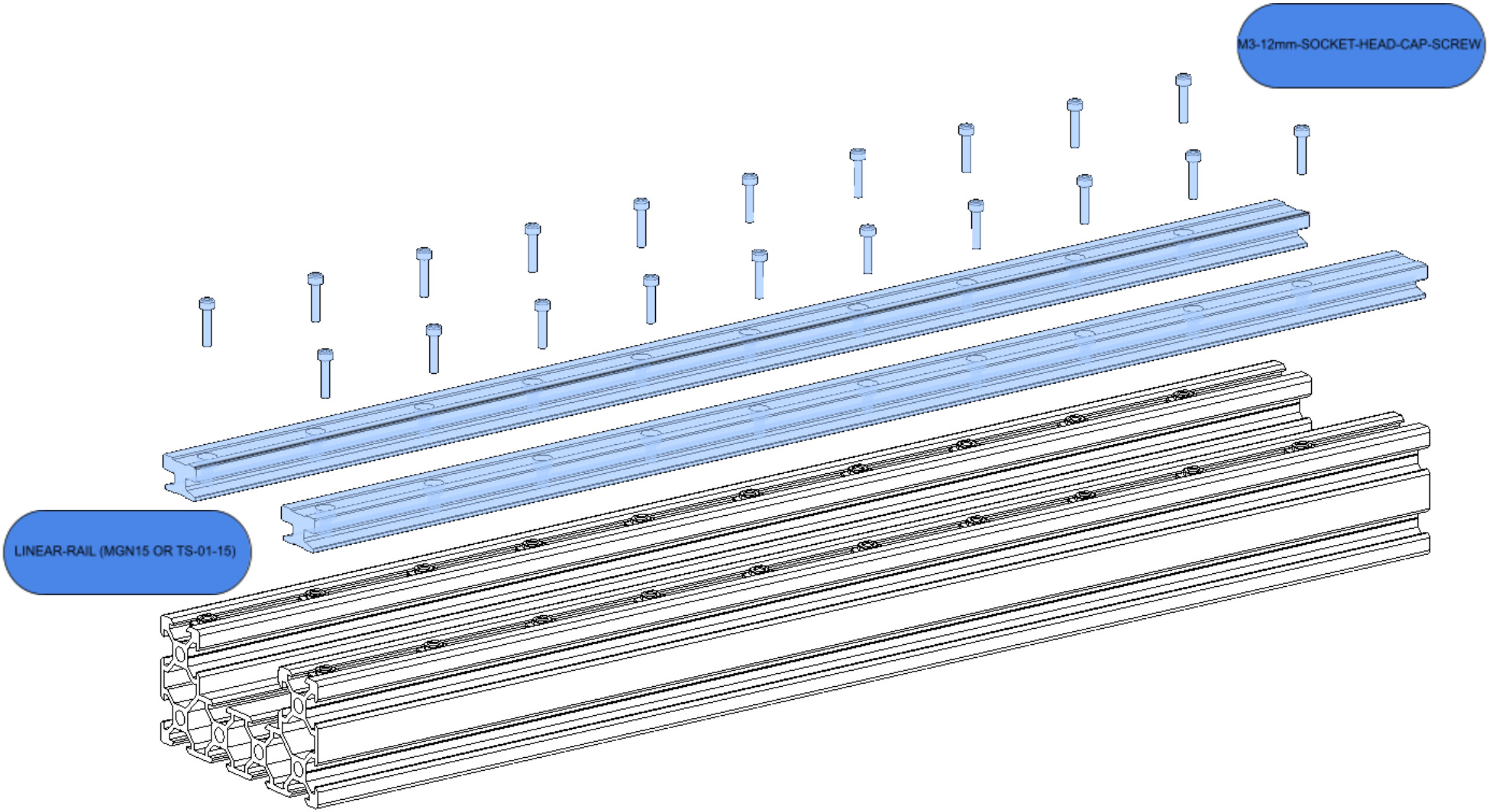
M3-12mm-SOCKET-HEAD-CAP-SCREW
LINEAR-RAIL (MGN15 OR TS-01-15)

M5-12mm-LOW-PROFILE

CHECK YOUR FASTENERS

It's a good time now to double check that all your fasteners are tight because going forward access to the X motor mount assembly is limited.

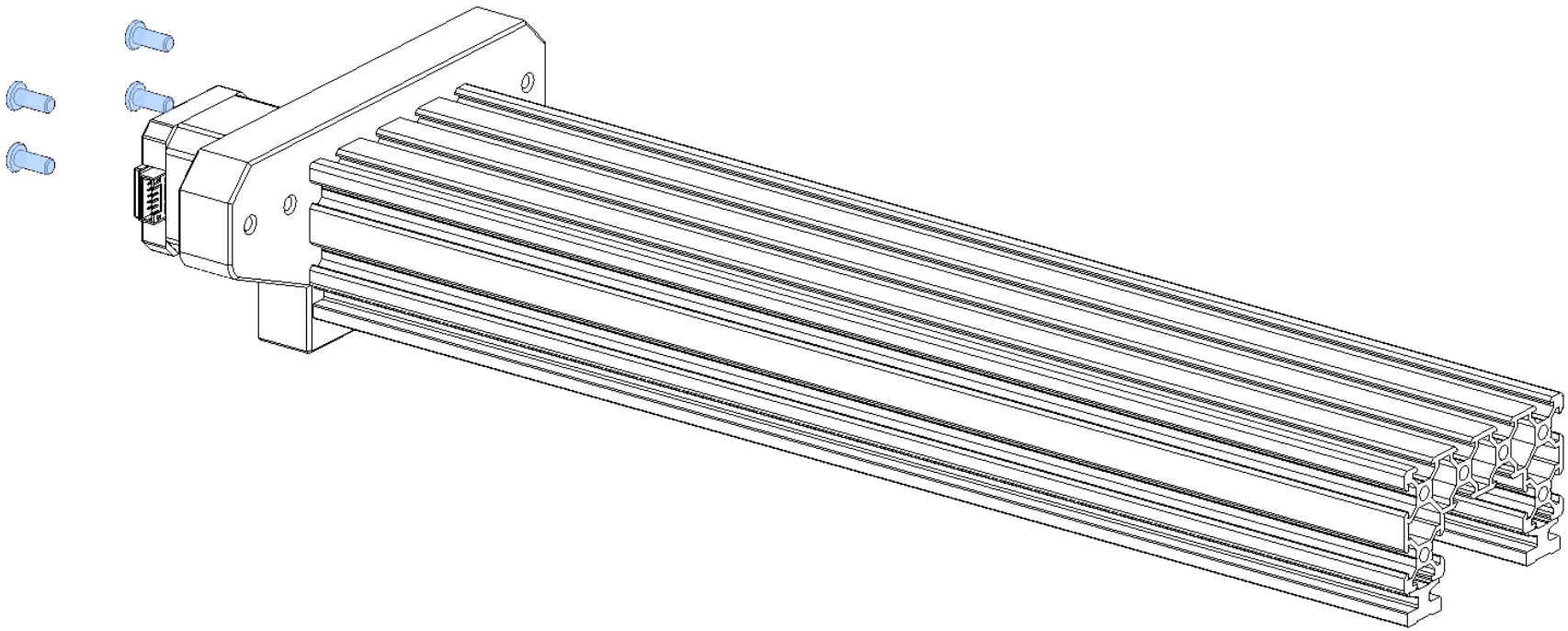

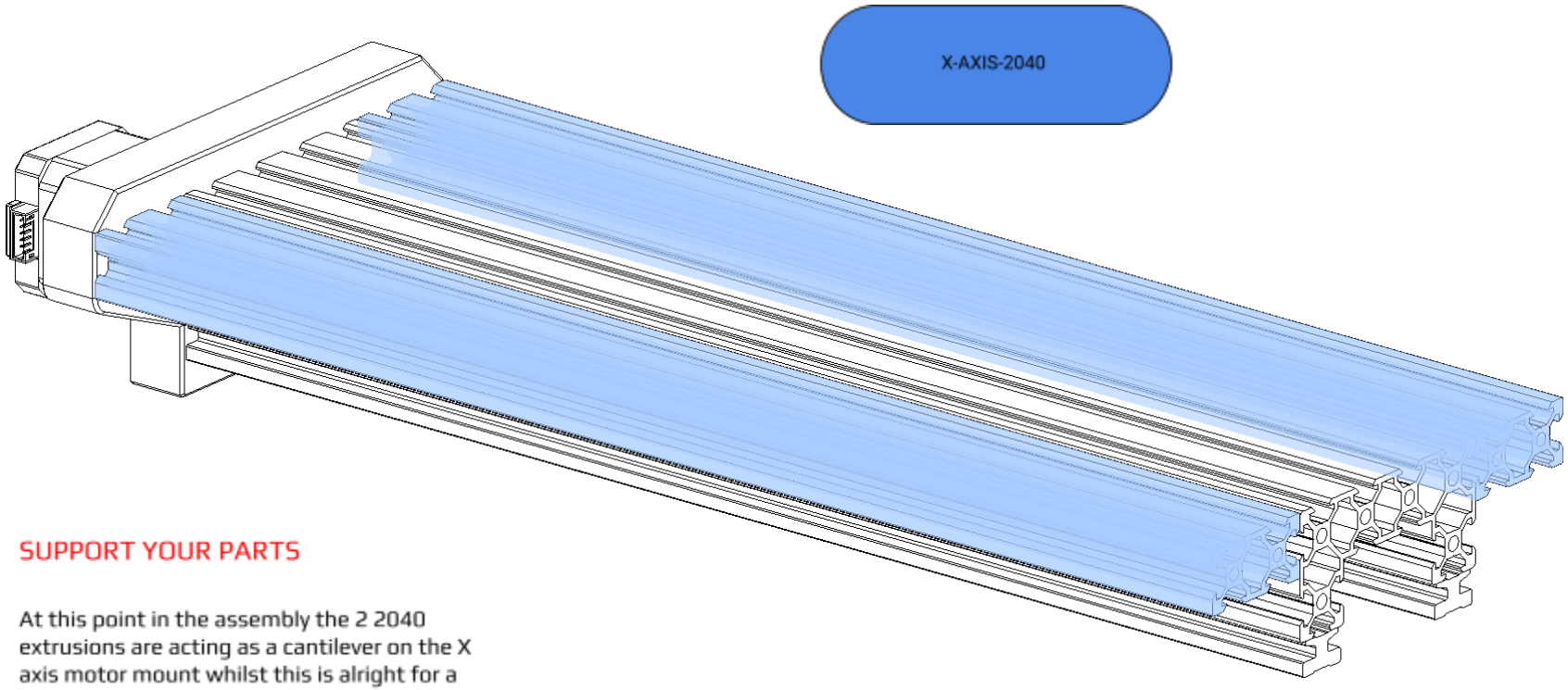

SUPPORT YOUR PARTS

At this point in the assembly the 2 2040 extrusions are acting as a cantilever on the X axis motor mount whilst this is alright for a short amount of time it can lead to parts deforming or breaking.

Find something you can use to support the assembly until its ready for final install.

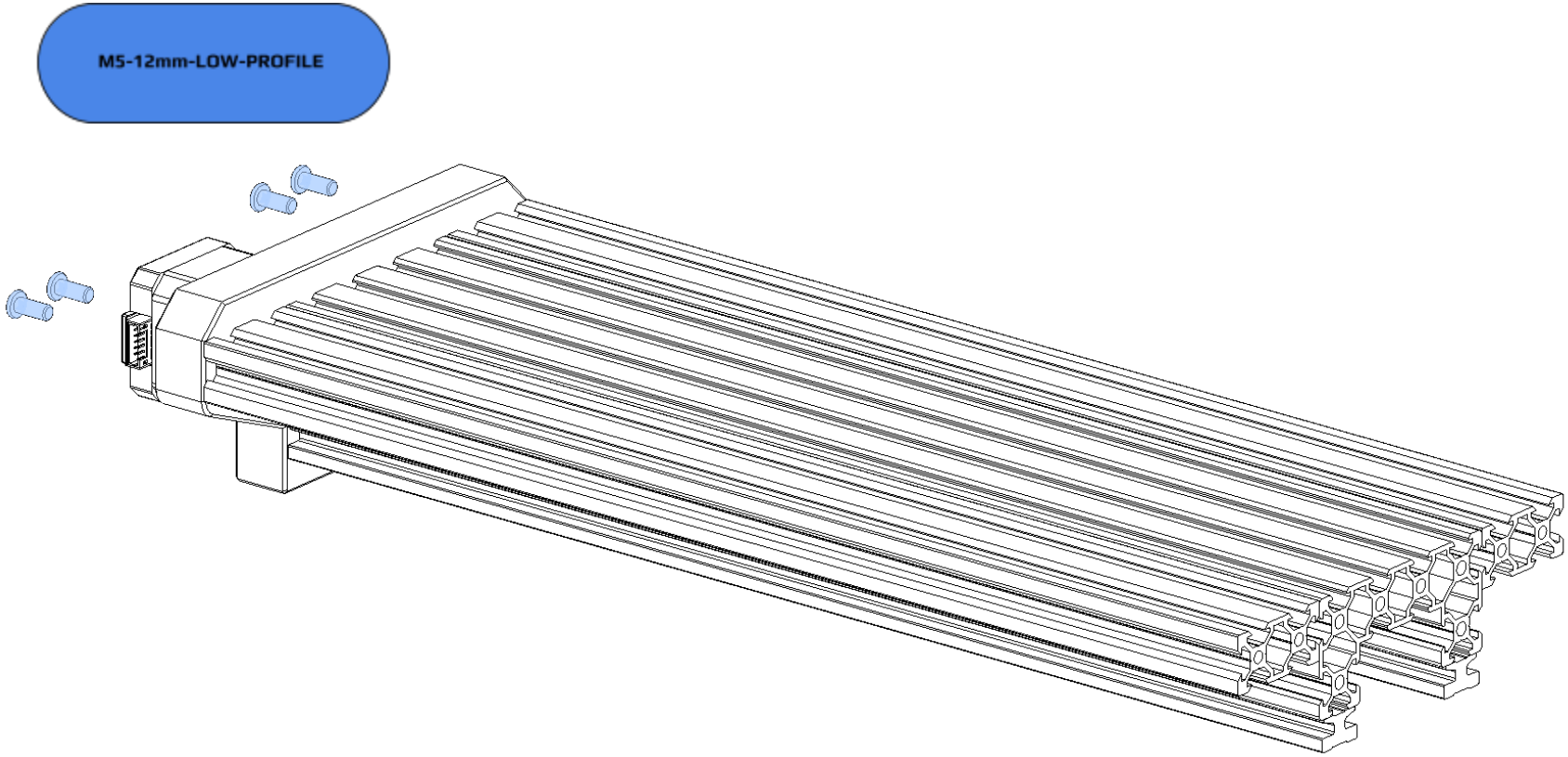
M5-12mm-LOW-PROFILE

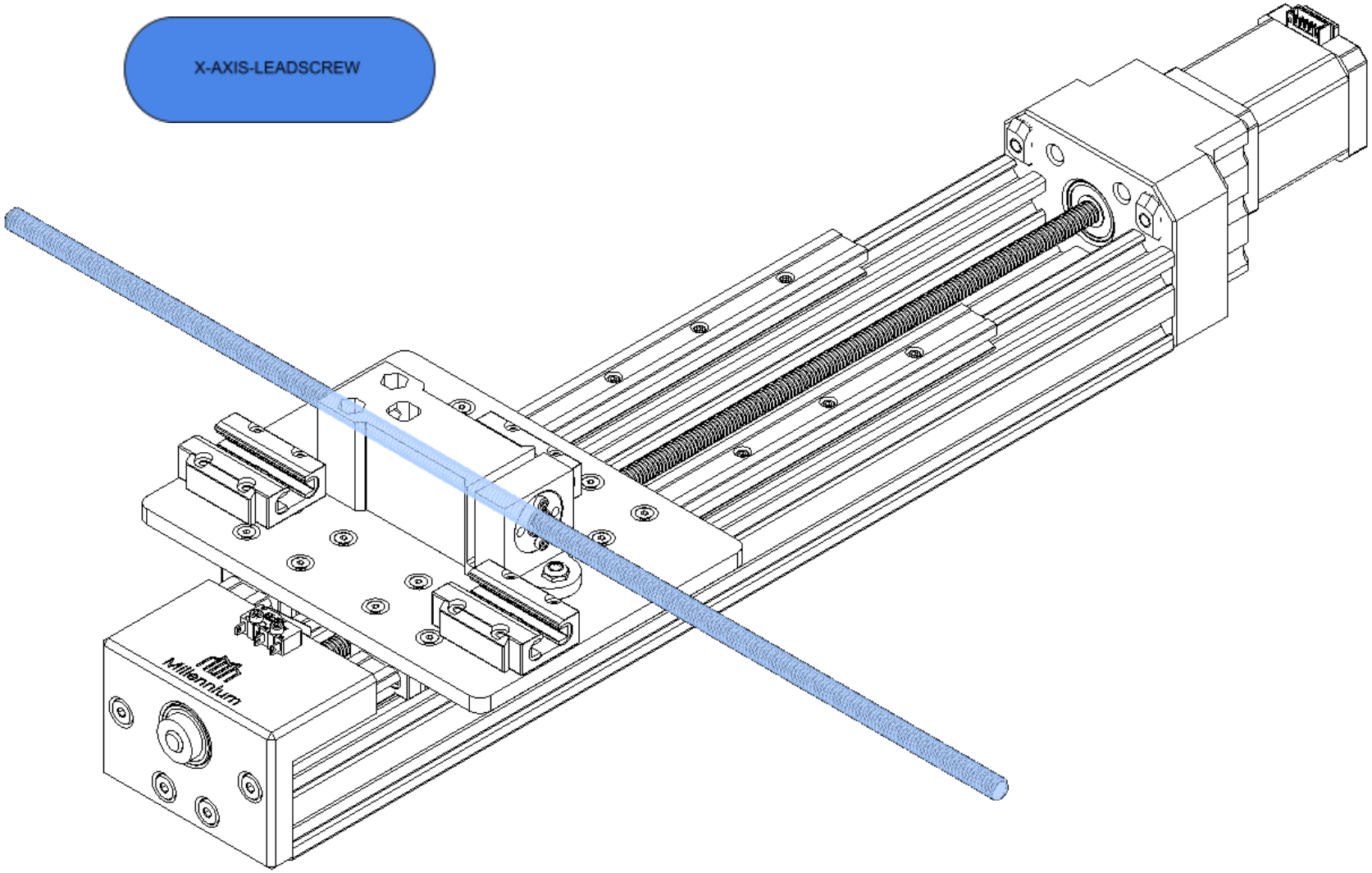
X-AXIS-LEADSCREW
Millennium

INSTALL THE X WORK TABLE

To install the X axis work table begin by lining up the carriages with the rails and start to slide the assembly through the the rail carriages.

At the same time align the X axis screw to the nut block. Once the screw makes contact with the nut block, begin to rotate the screw until the threads engage or until the end of the screw sits inside the spider coupler.

Once the table is installed don't forget to tighten the grub screw on spider coupler.

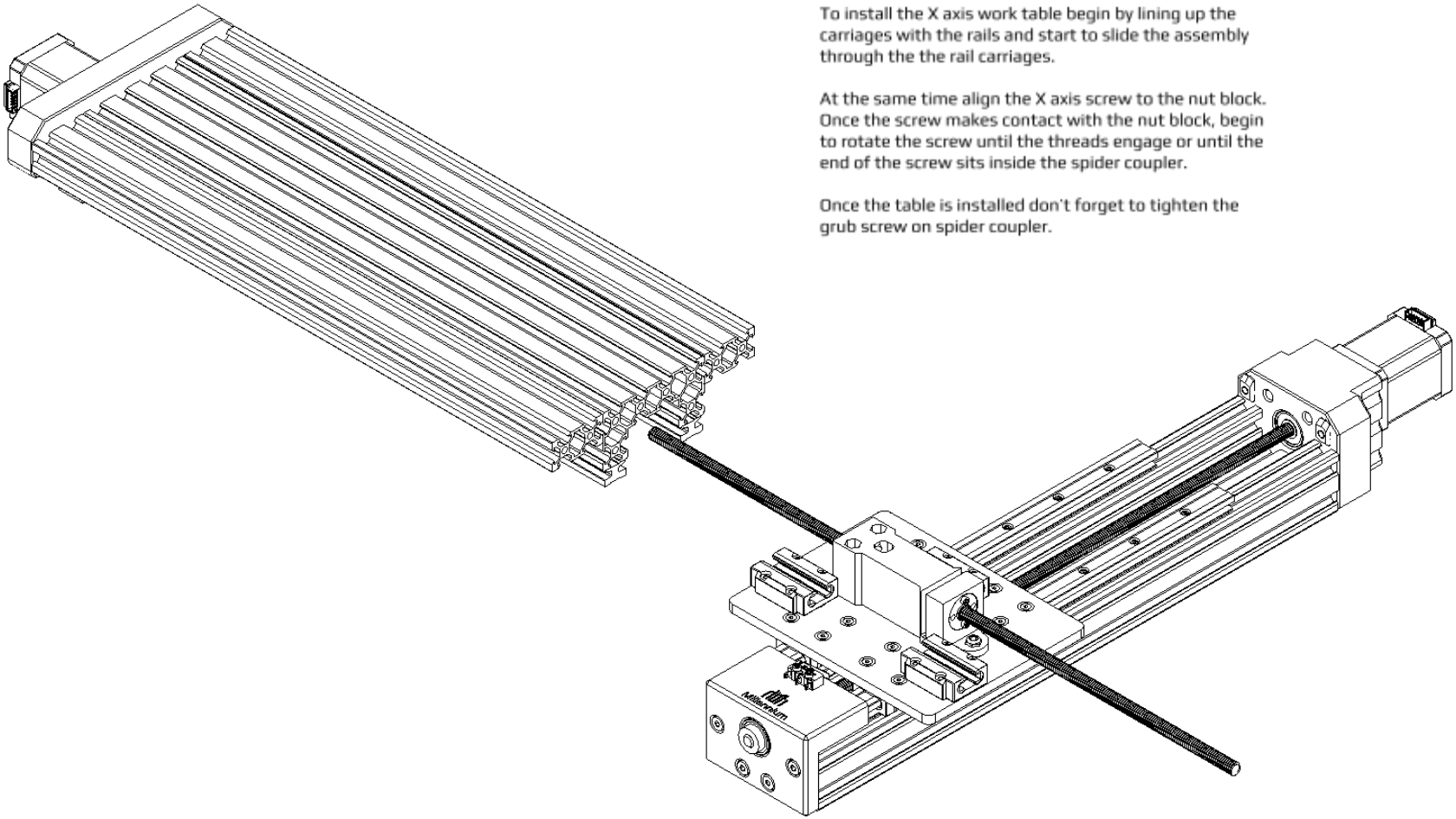

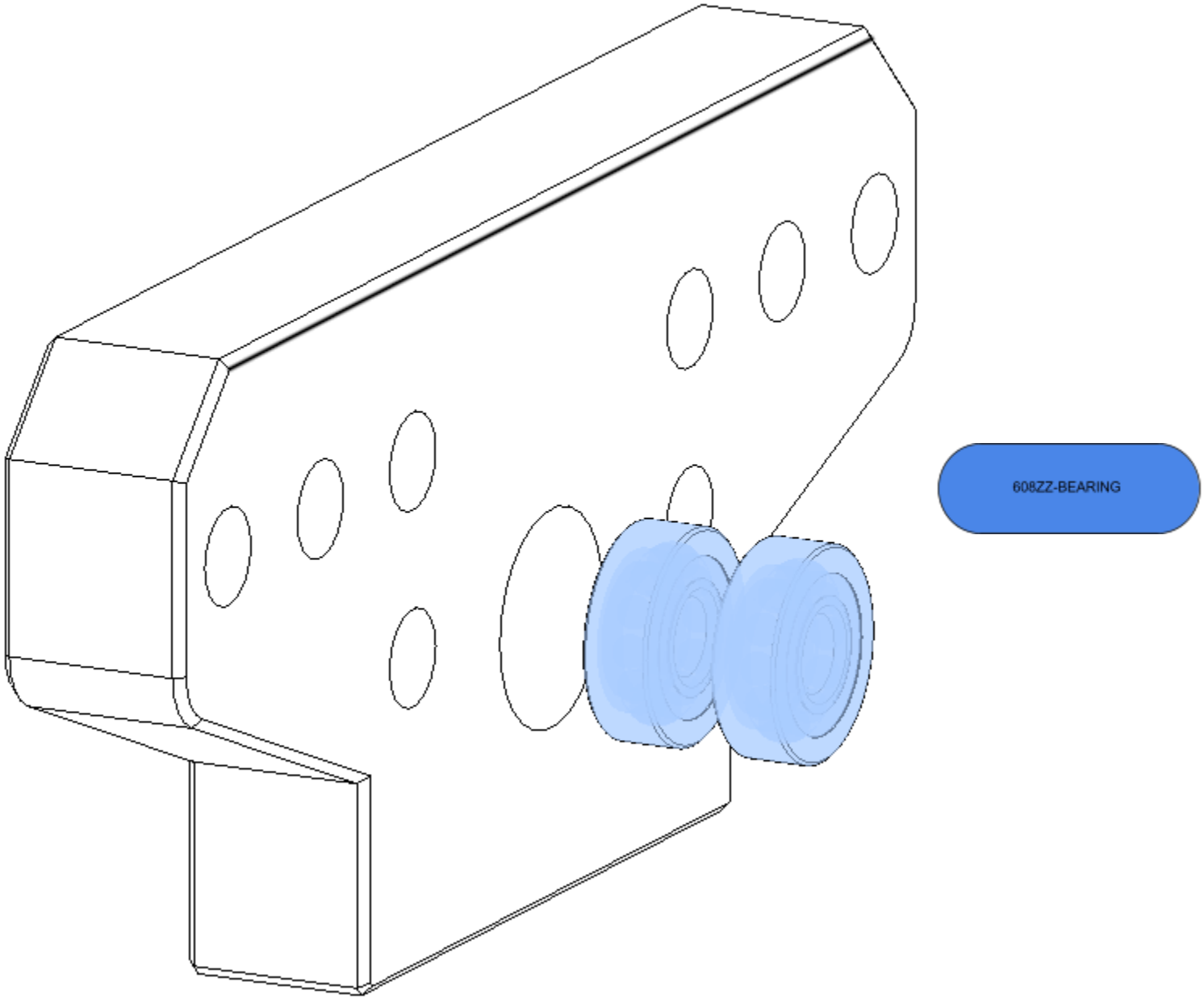
608ZZ-BEARING

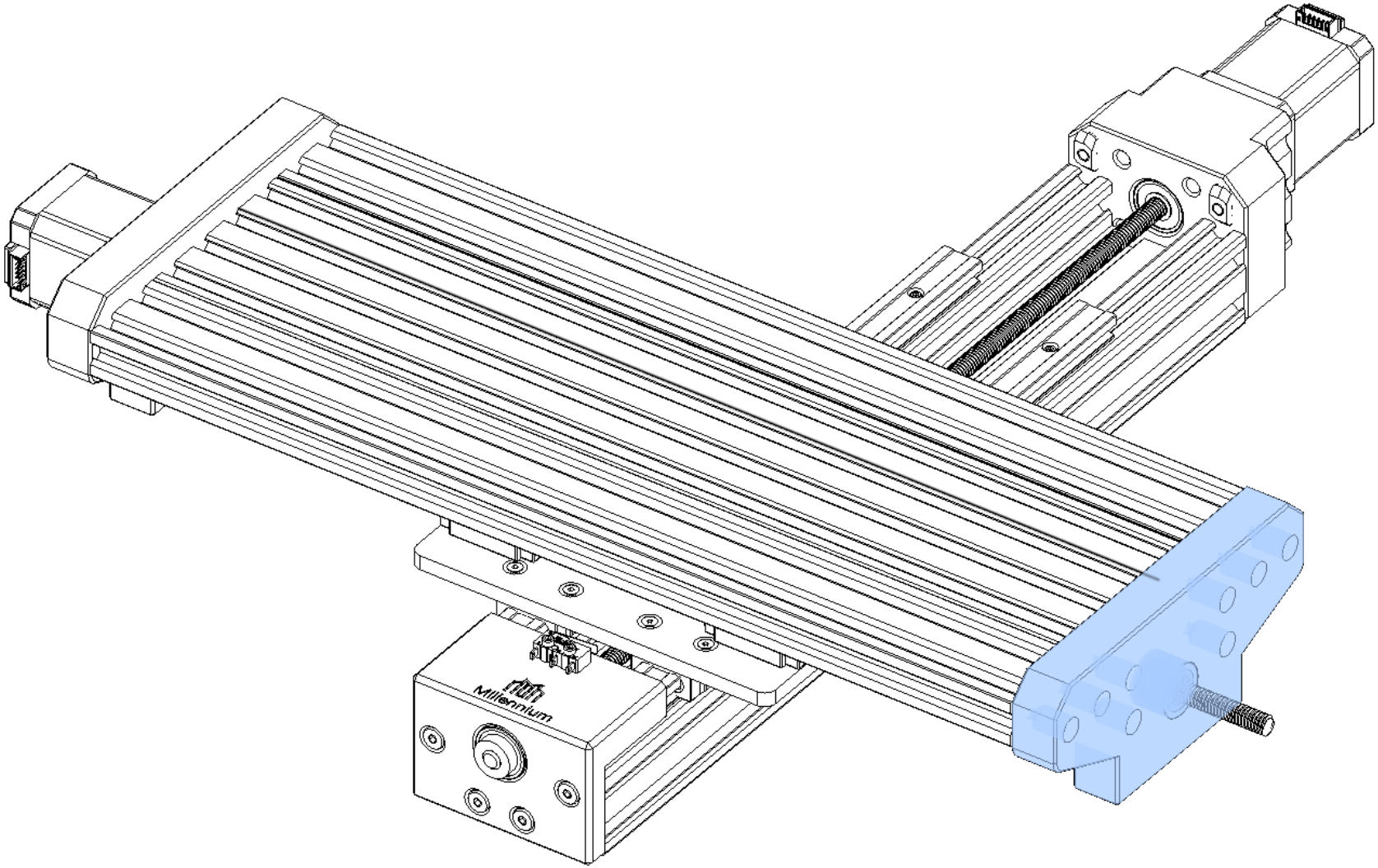
Millennium

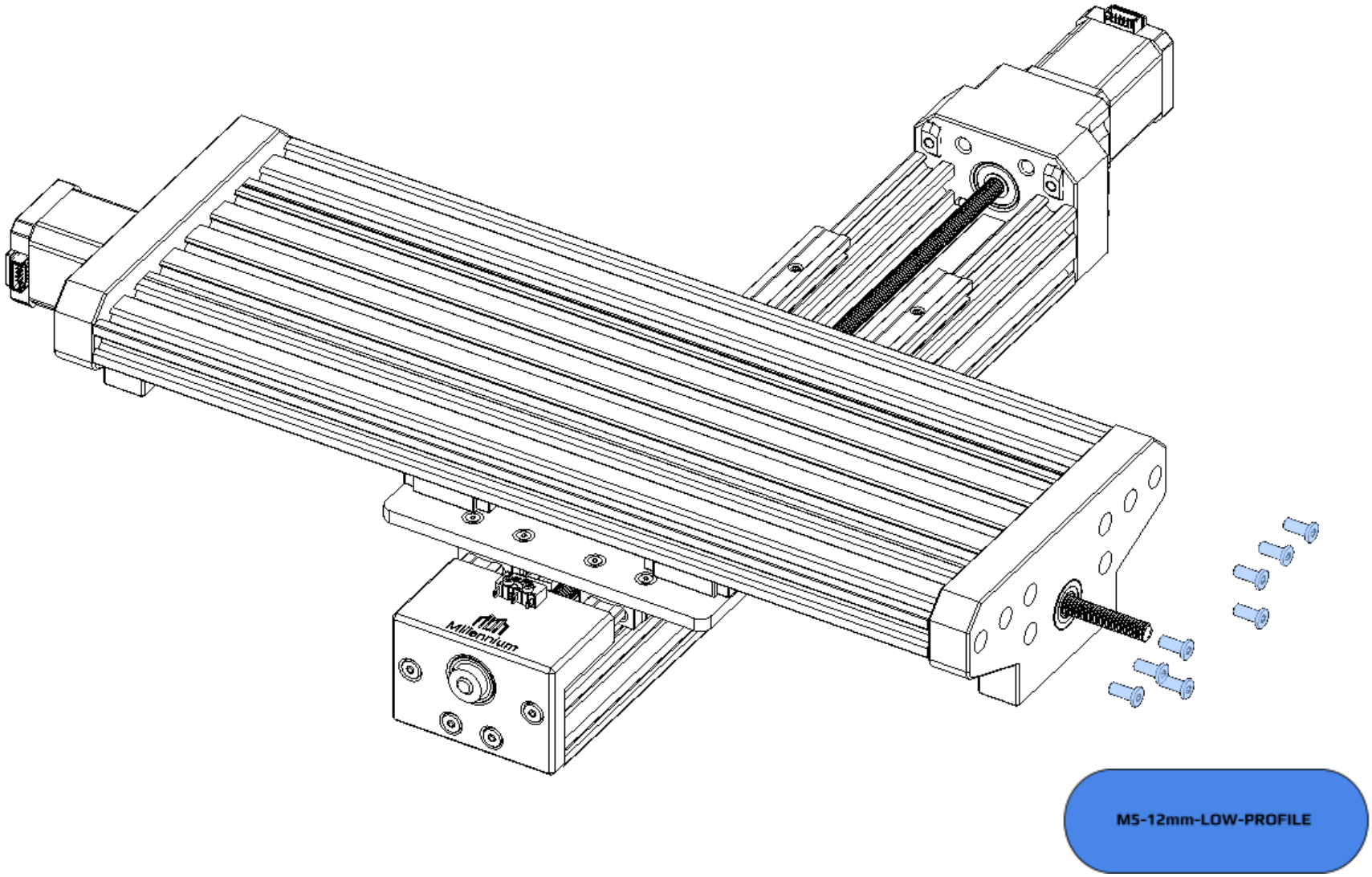
Millennium
M5-12mm-LOW-PROFILE

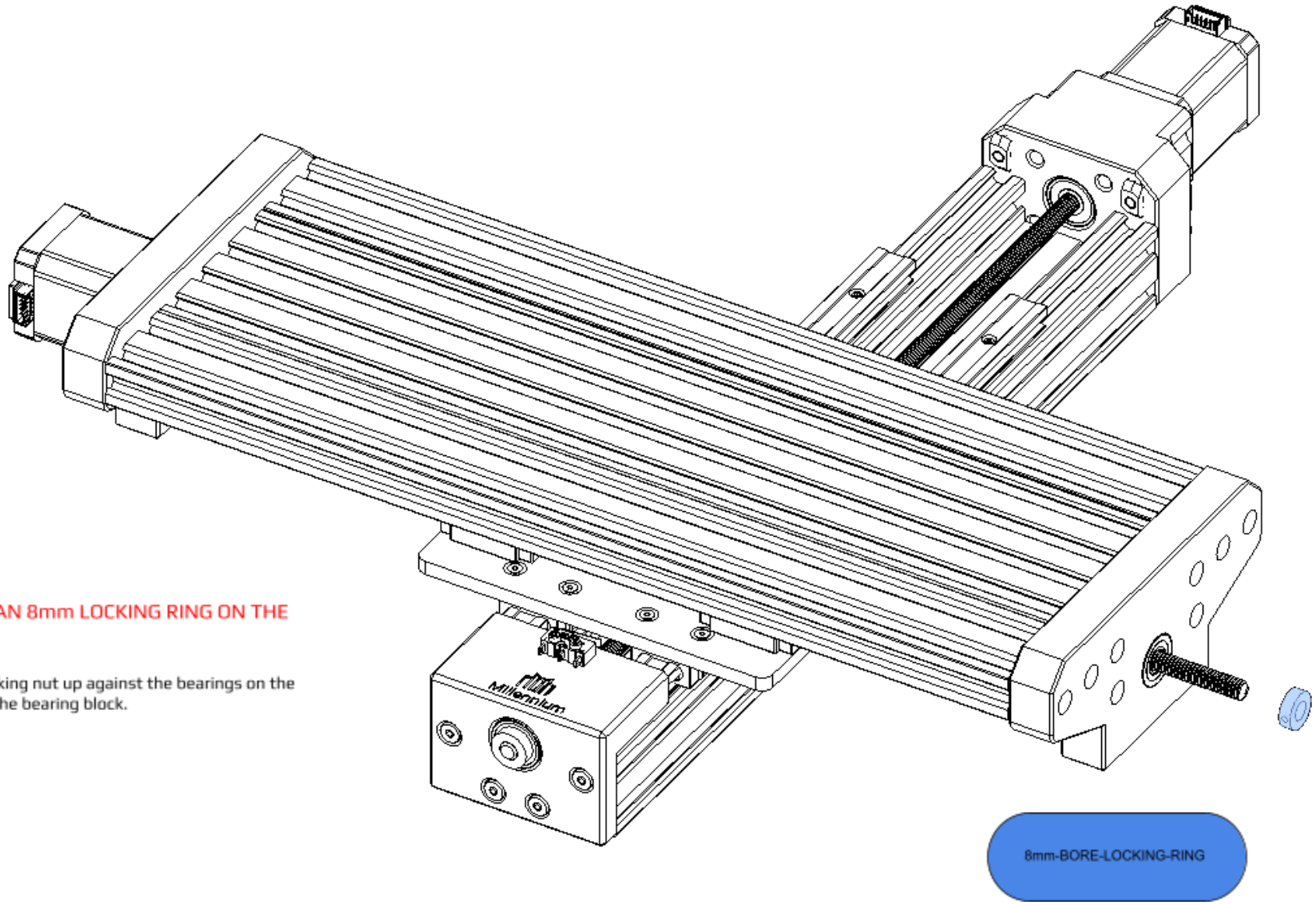

INSTALL AN 8mm LOCKING RING ON THE SCREW

Install a locking nut up against the bearings on the outside of the bearing block.

This page is intentionally left blank

Z AXIS ASSEMBLY

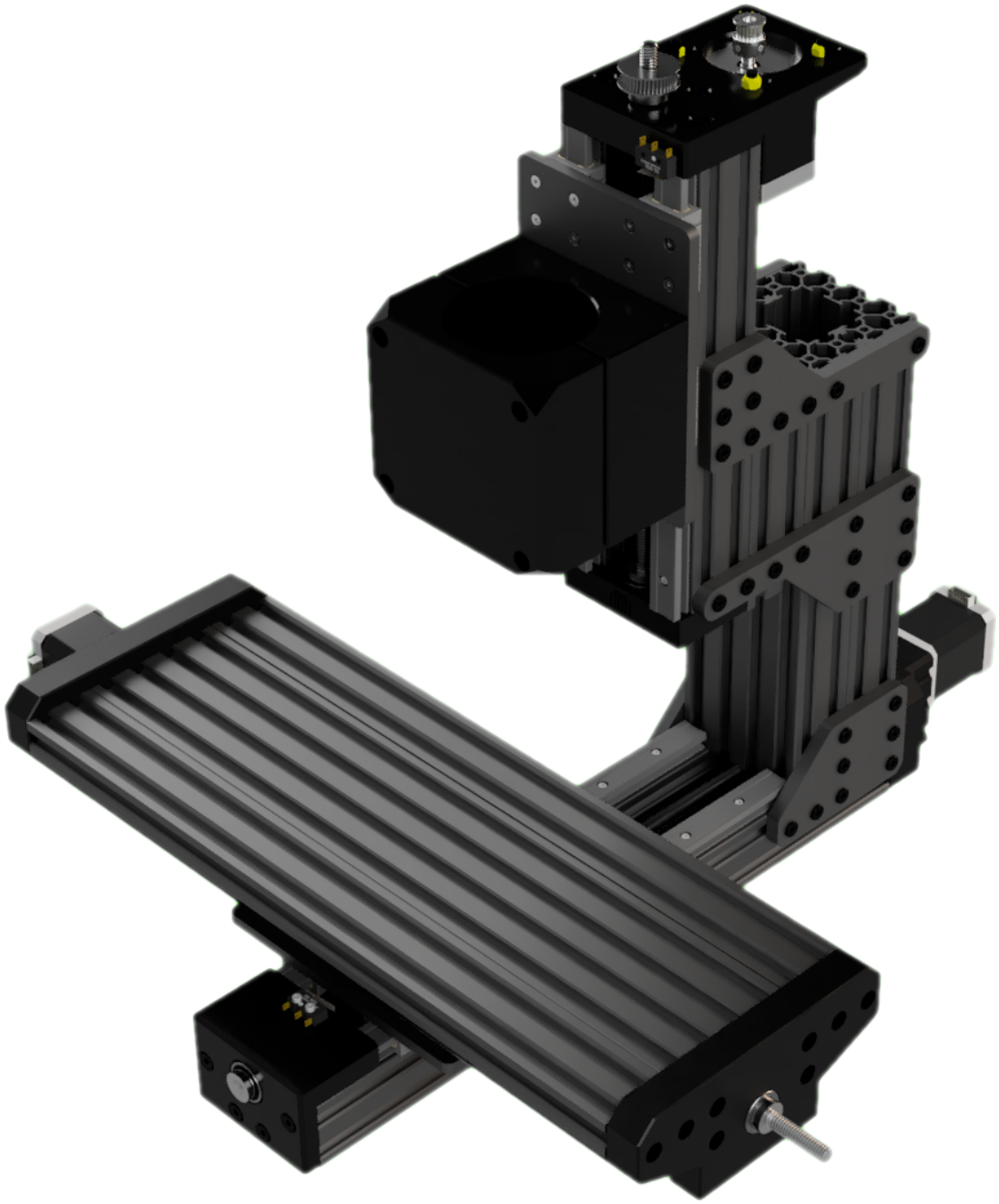

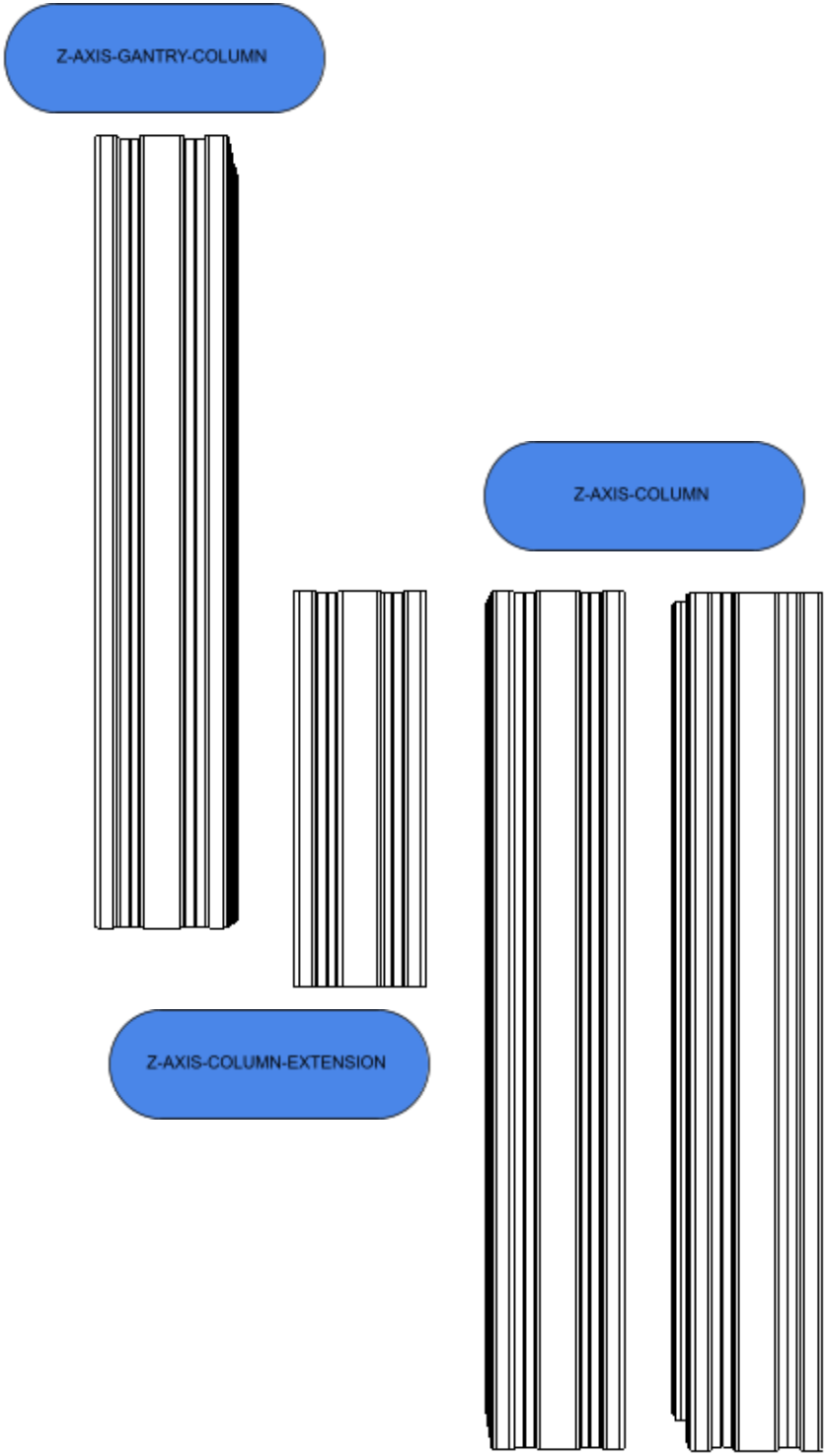

SET IT RIGHT

It's a good point to make sure that your extrusions are all set at right angles to each other failure to do so can lead to tramming errors later down the line

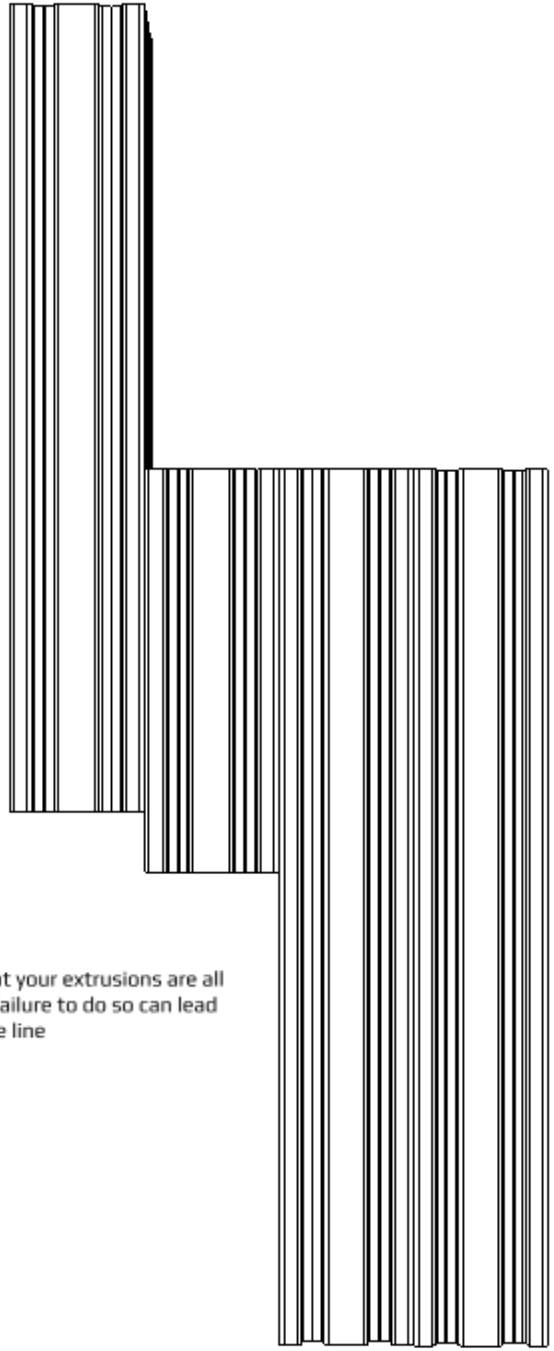

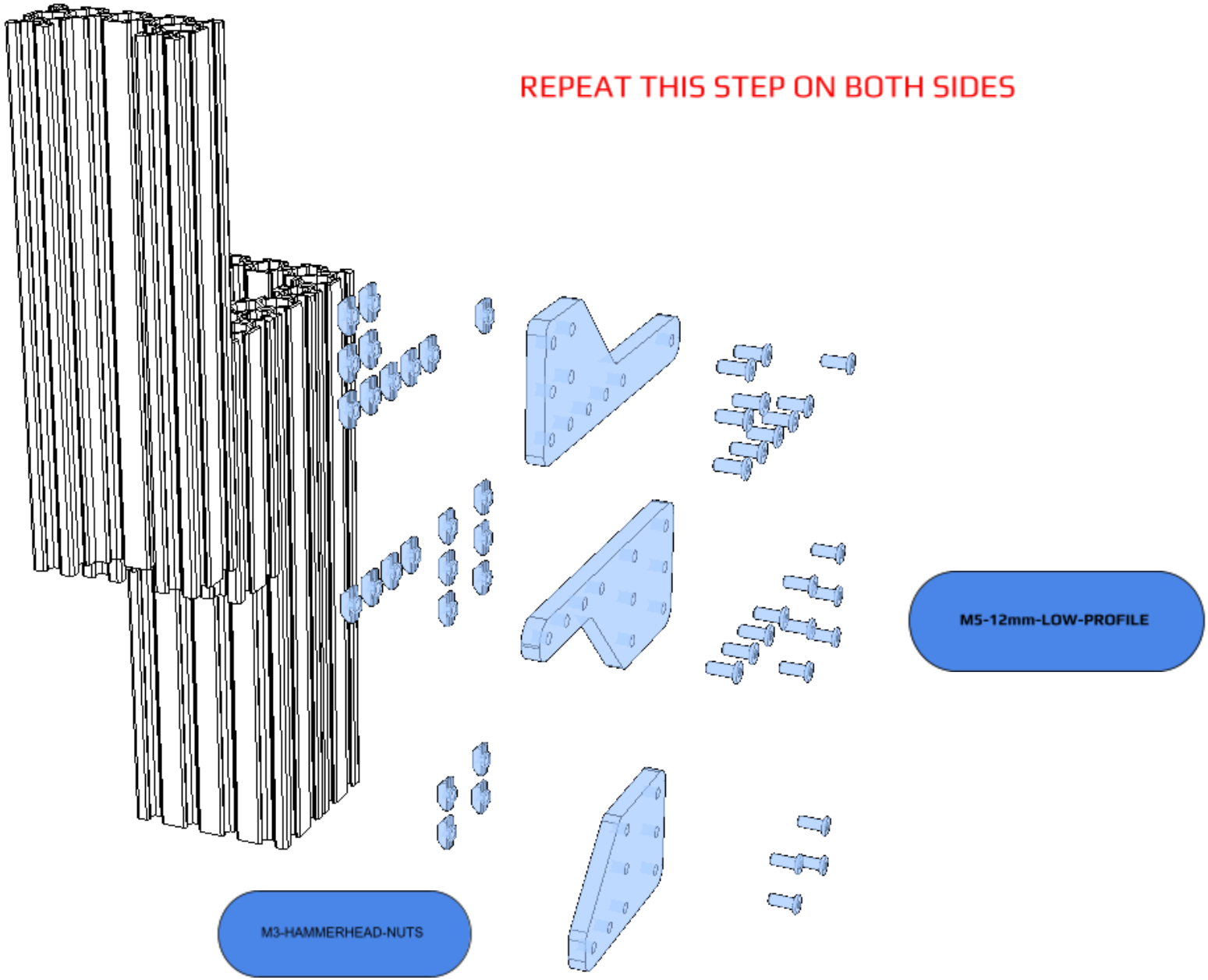
REPEAT THIS STEP ON BOTH SIDES
M5-12mm-LOW-PROFILE
M3-HAMMERHEAD-NUTS

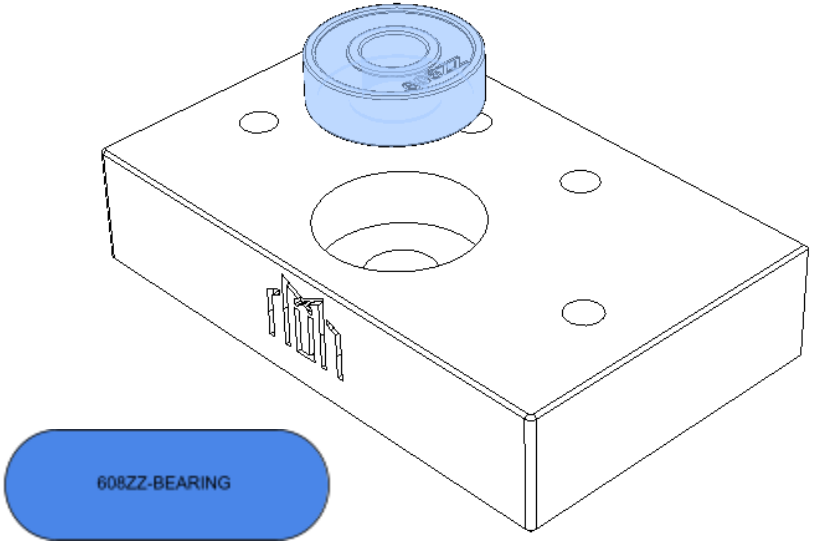
608ZZ-BEARING

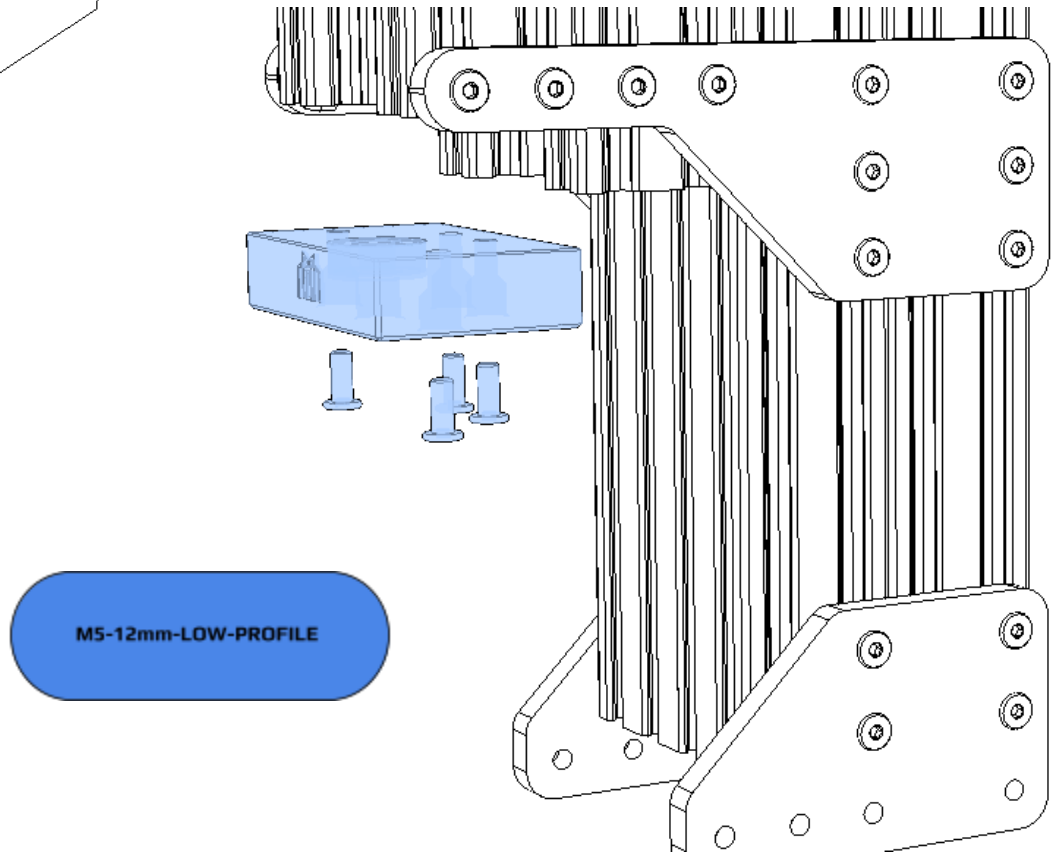
M5-12mm-LOW-PROFILE

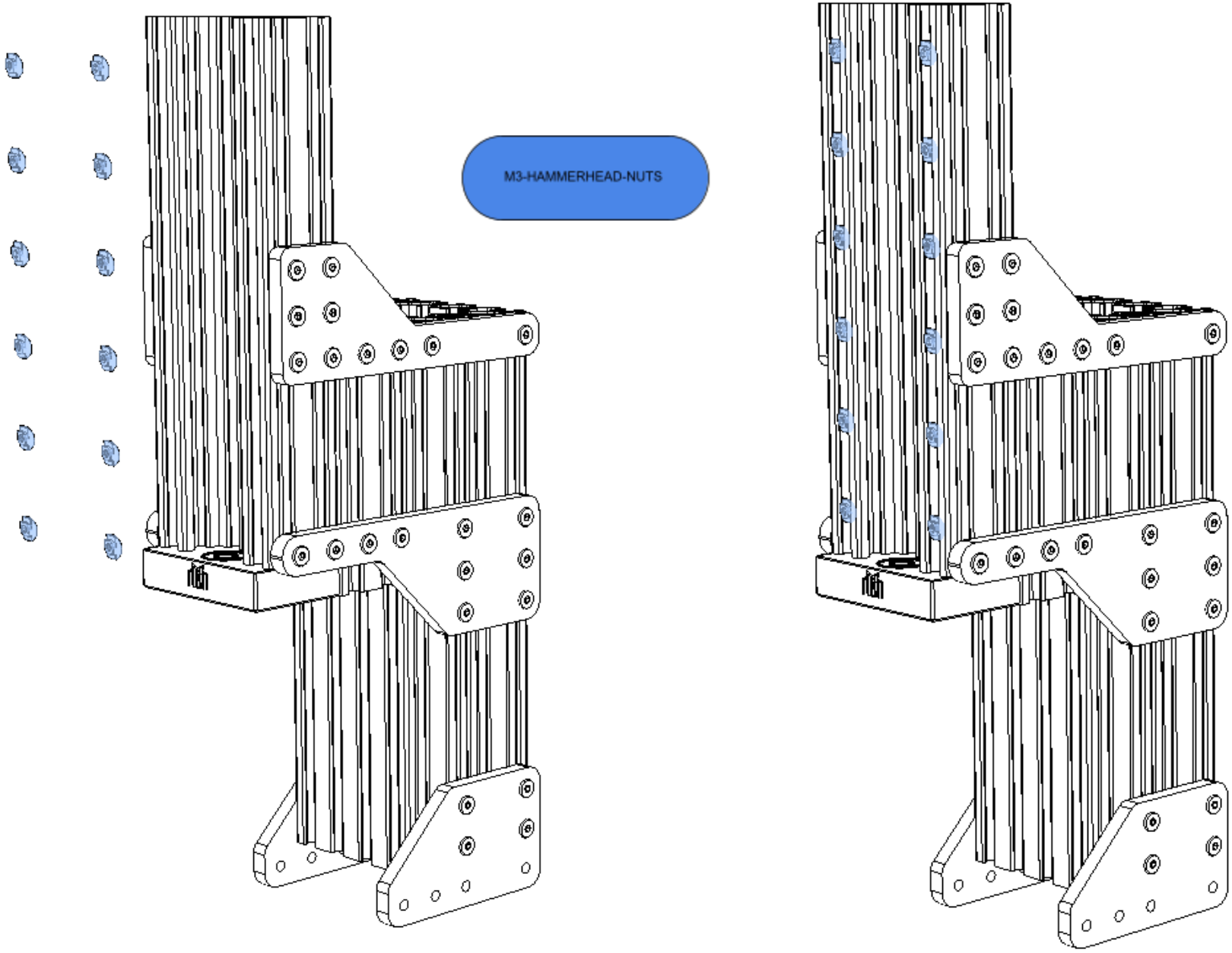
M3-HAMMERHEAD-NUTS

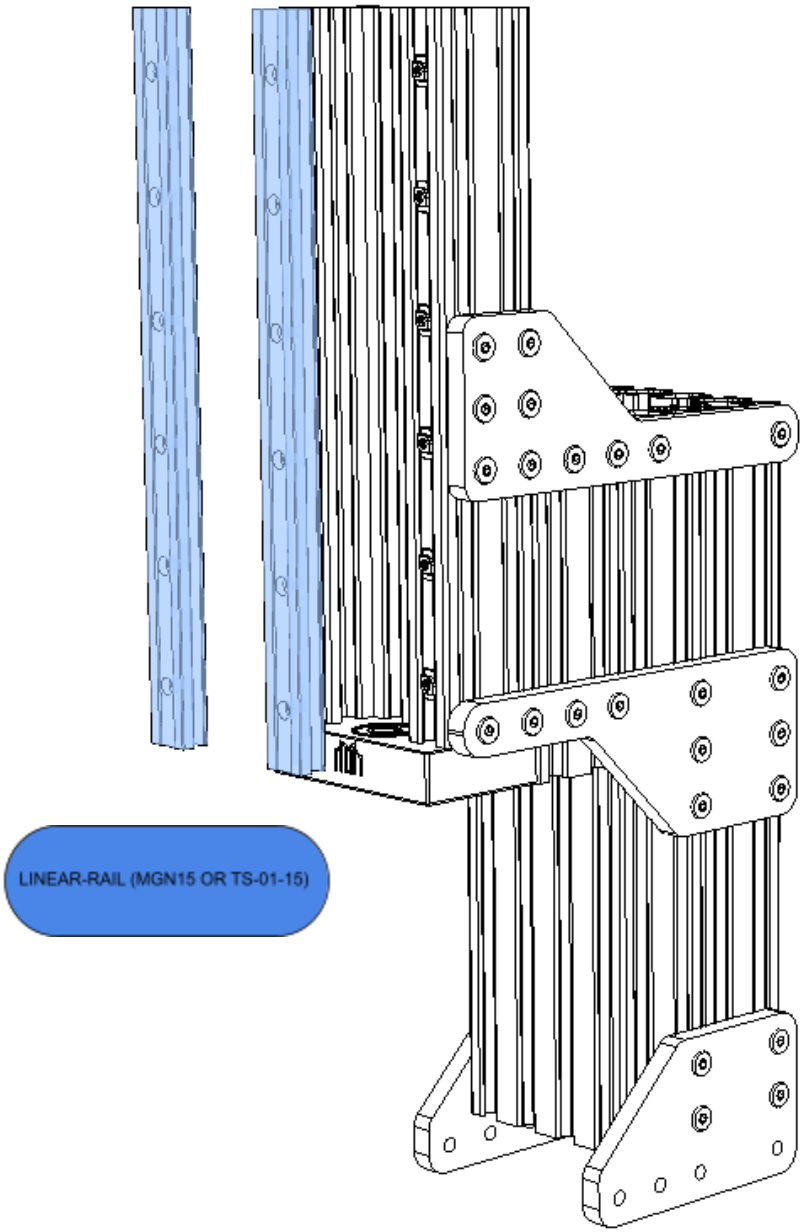
LINEAR-RAIL (MGN15 OR TS-01-15)

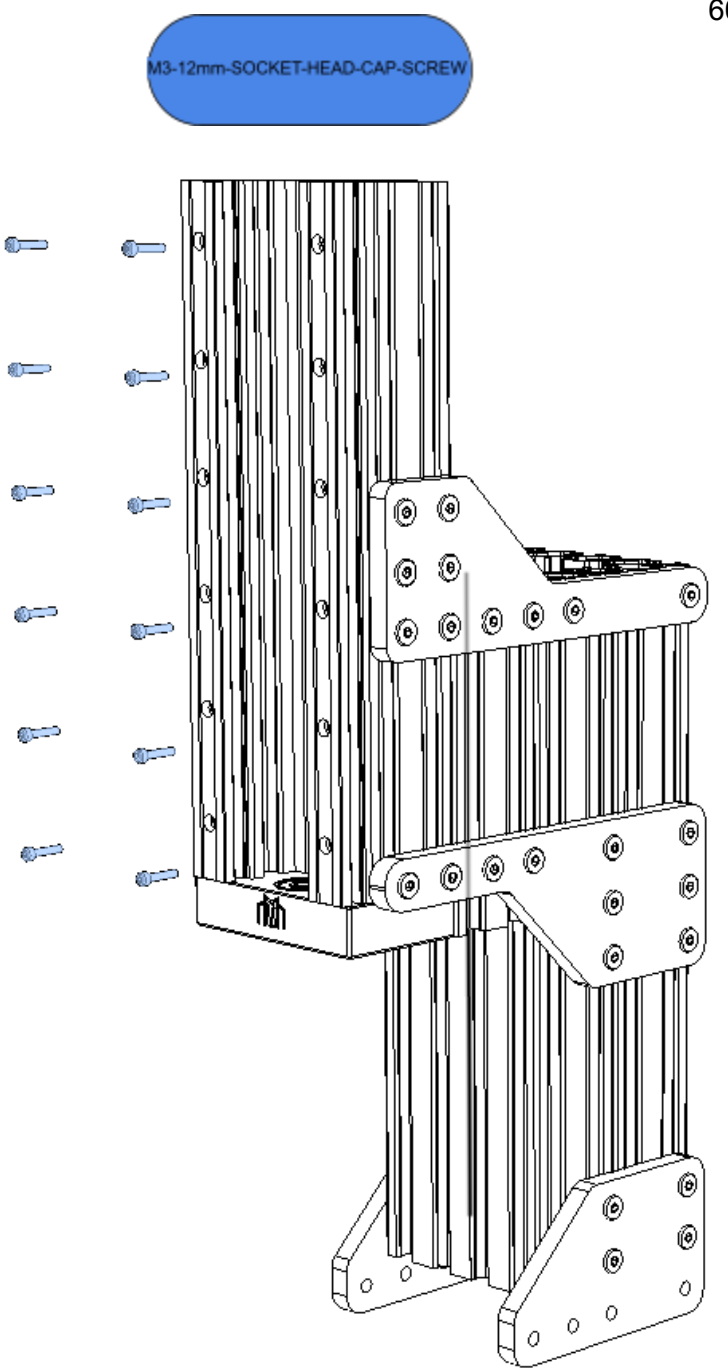
M3-12mm-SOCKET-HEAD-CAP-SCREW

INSTALL THE Z LEAD SCREW

Install the z lead screw with a locking ring pressing down against the bearing block.

Ensure that the lead screw does not protrude too far through the bearing block

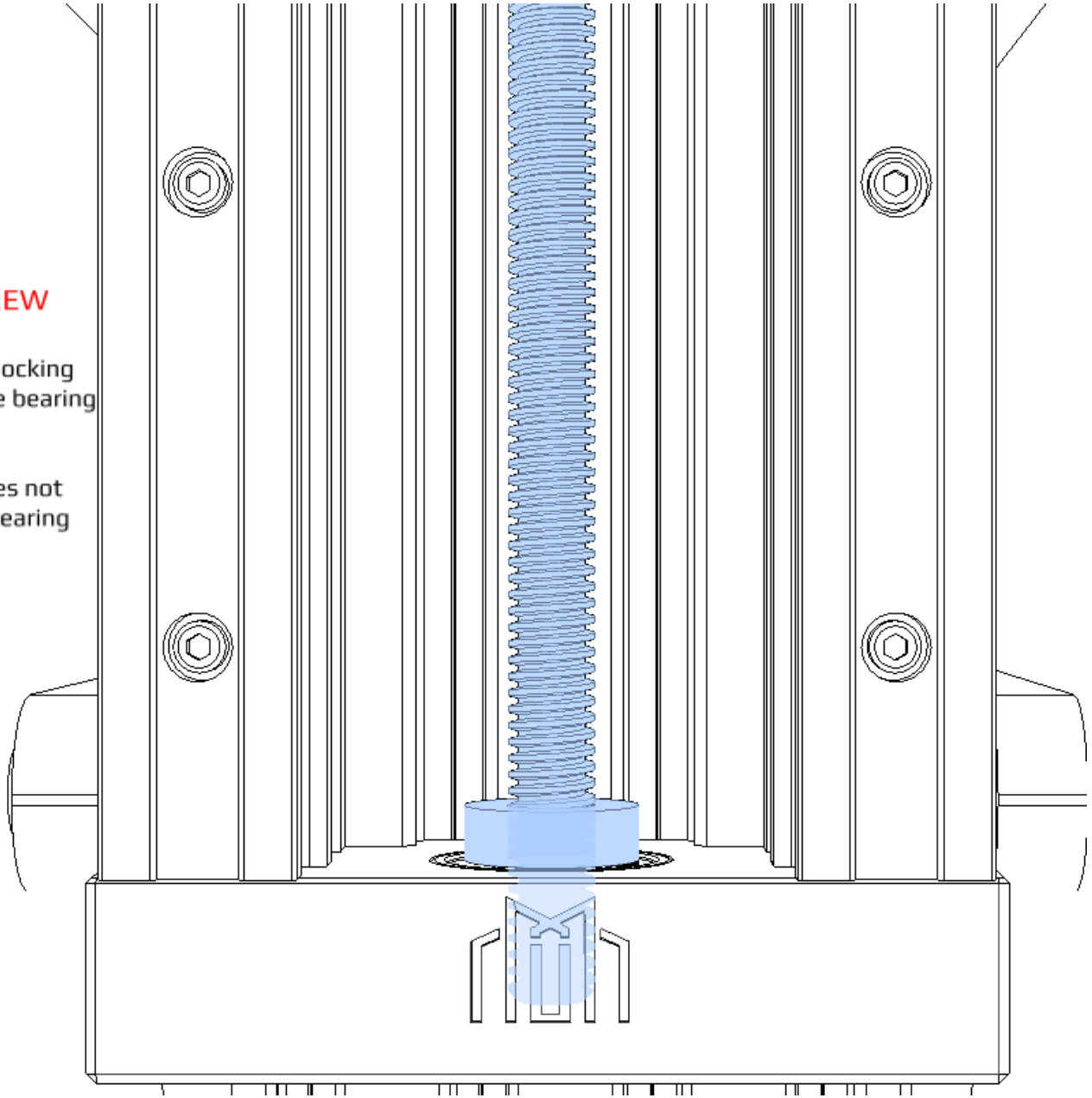

M5-NYLOC-NUT

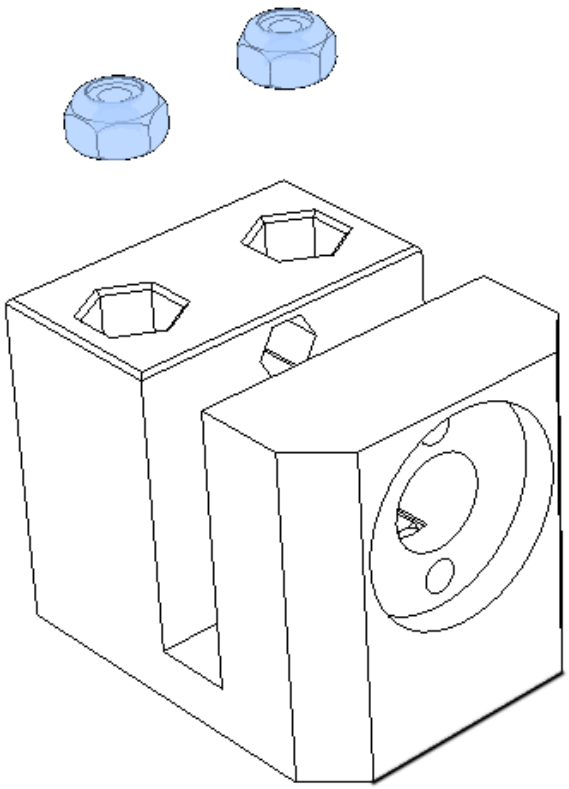

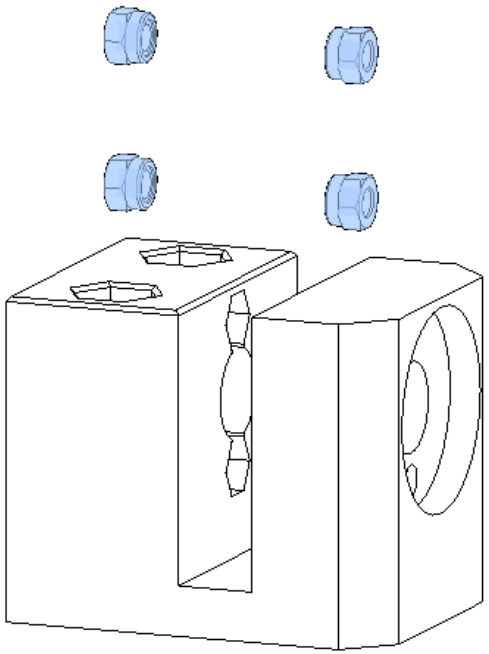

M3-NYLOC-NUT

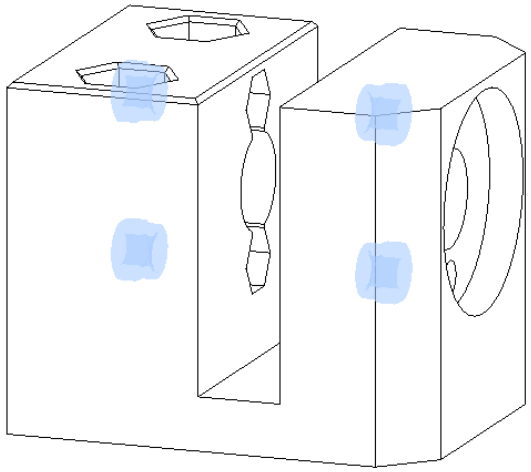

REMINDER BE SAFE , LOCTITE IT !

These machines vibrate an immense amount When in use and fasteners are bound to back out. Don't be afraid to add a little bit of loctite to all your screws to avoid this problem

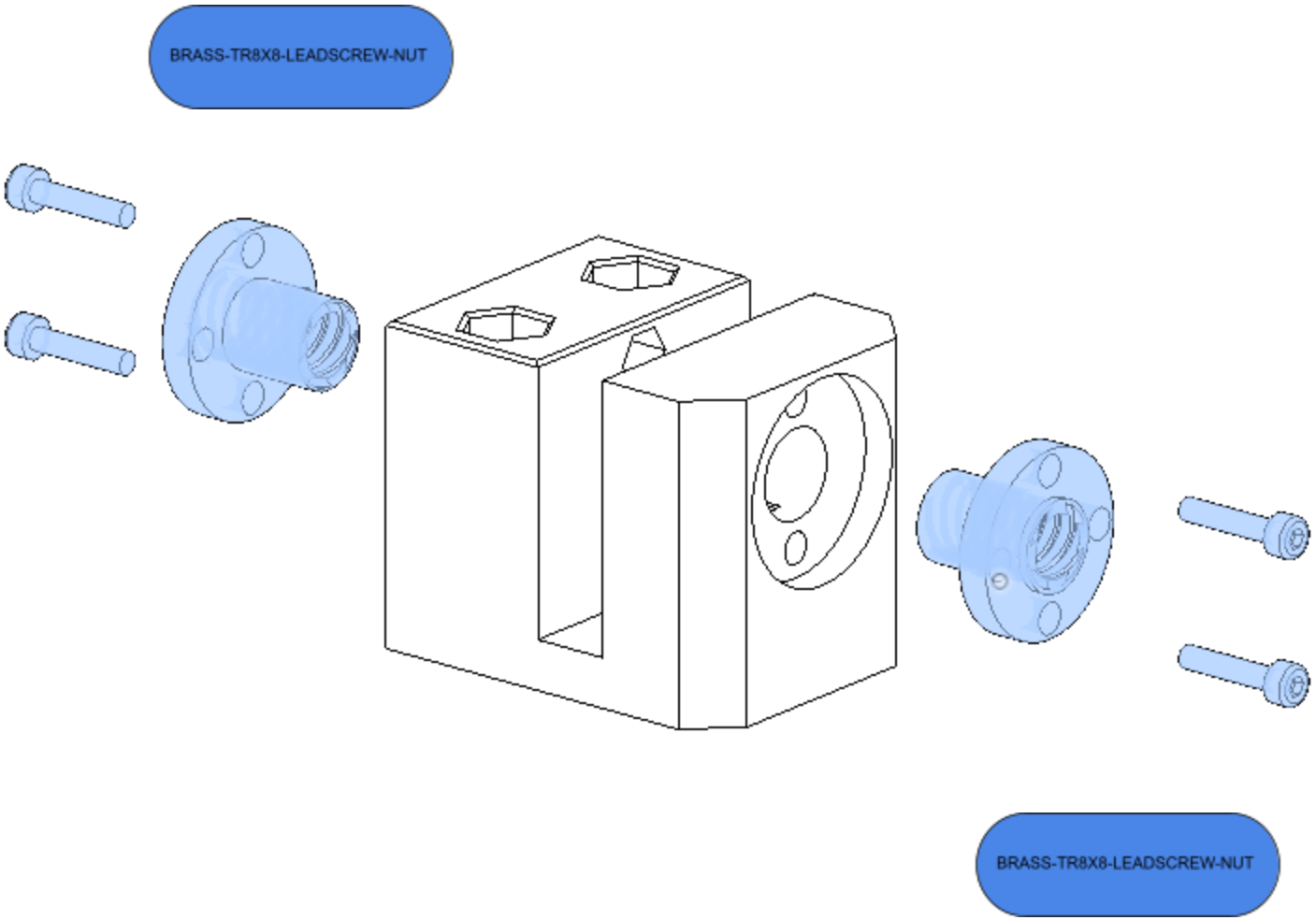
BRASS-TR8X8-LEADSCREW-NUT
BRASS-TR8X8-LEADSCREW-NUT

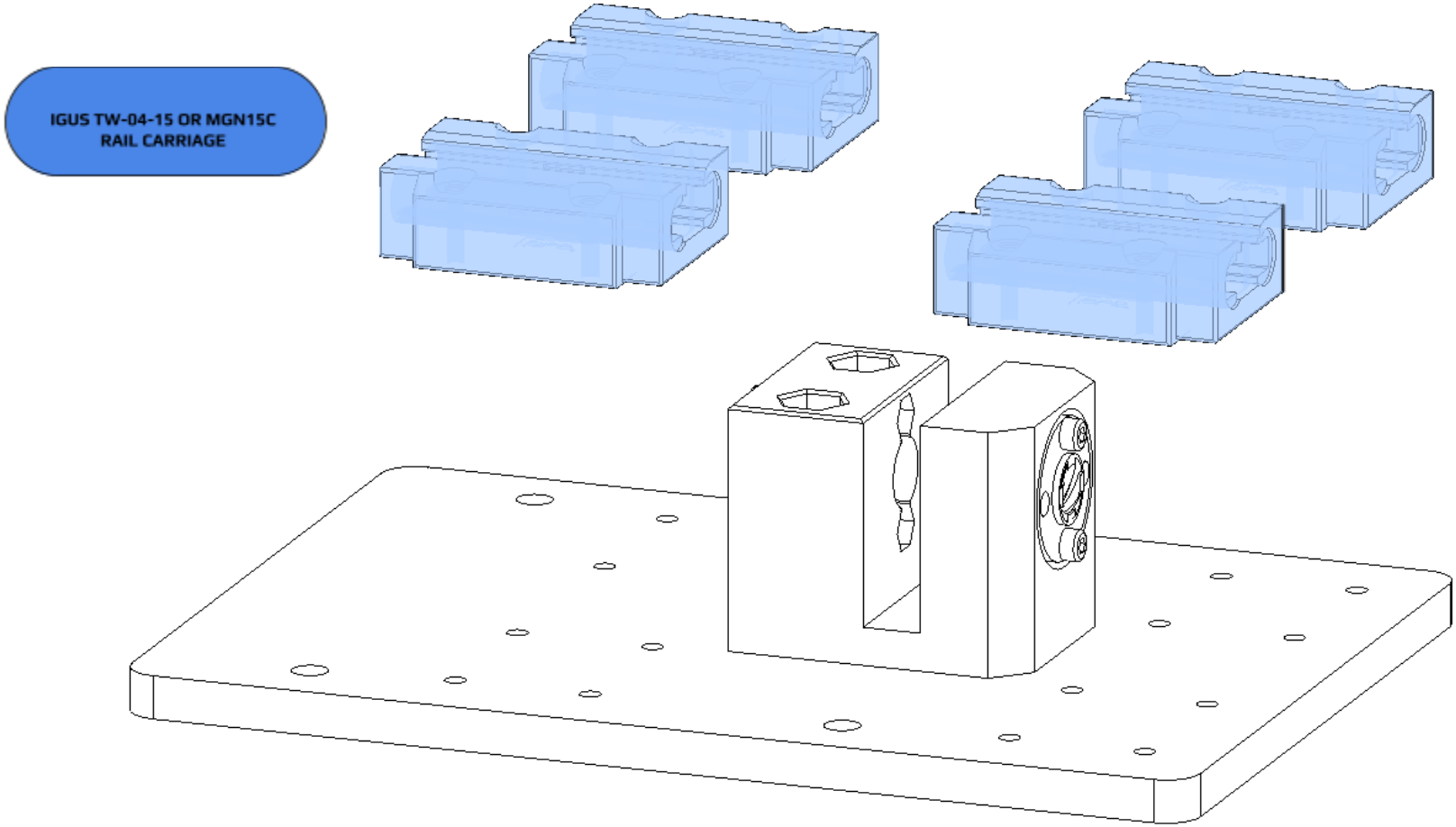
IGUS TW-04-15 OR MGN15C
RAIL CARRIAGE

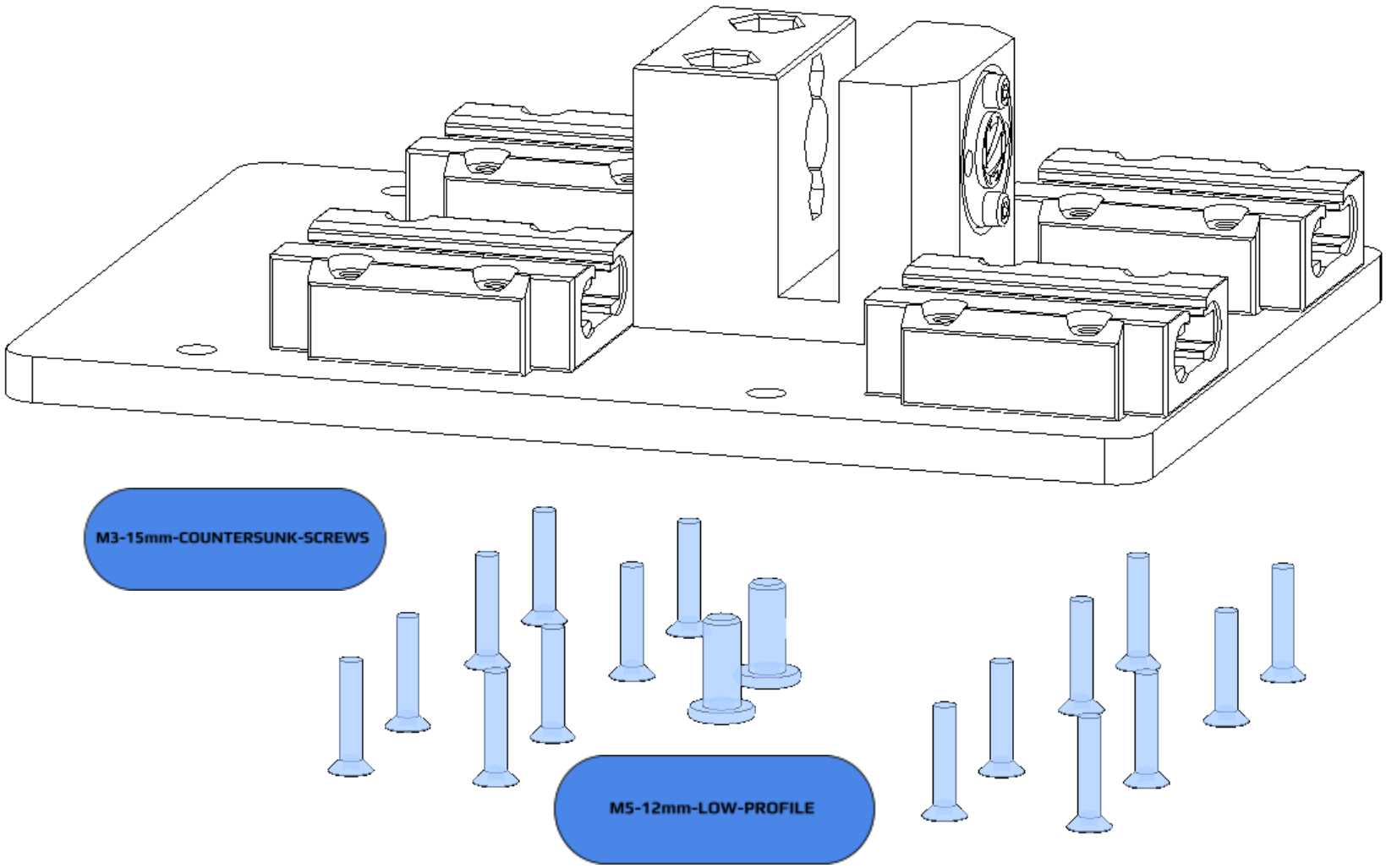
M3-15mm-COUNTERSUNK-SCREWS
M5-12mm-LOW-PROFILE

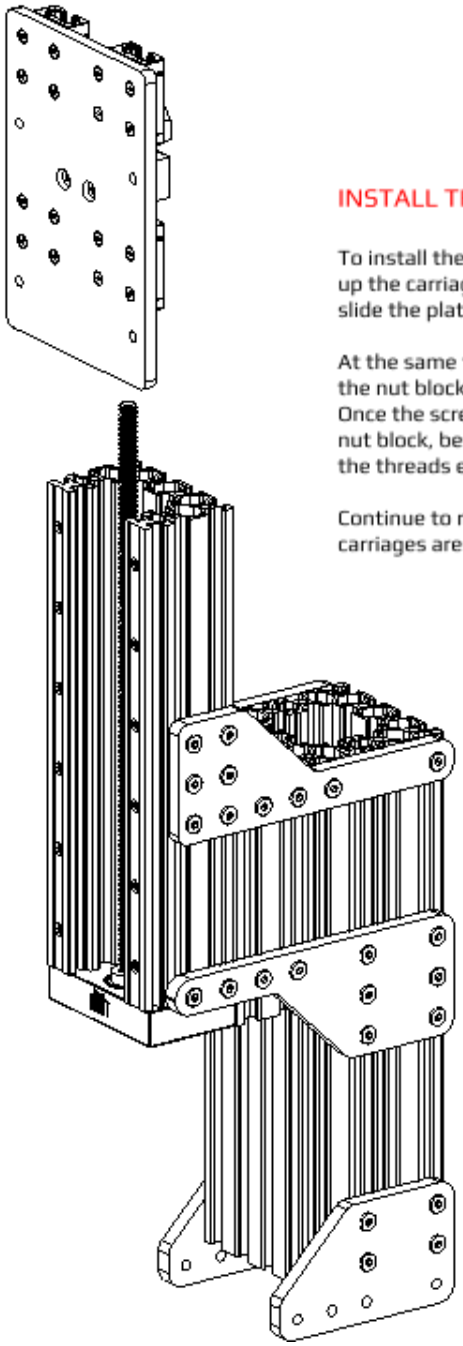

INSTALL THE Z GANTRY PLATE

To install the Z gantry plate begin by lining up the carriages with the rails and start to slide the plate assembly onto the rails.

At the same time align the Z axis screw to the nut block.
Once the screw makes contact with the nut block, begin to rotate the screw until the threads engage.

Continue to rotate the screw until all carriages are riding on the rails.

DON'T TIGHTEN THE GRUB SCREW YET

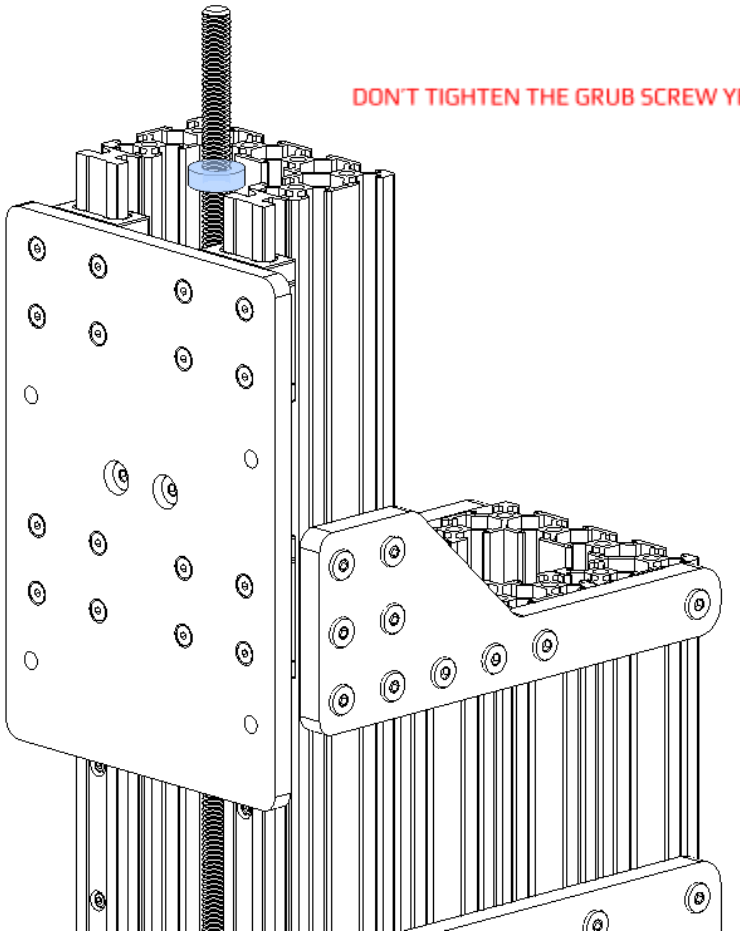

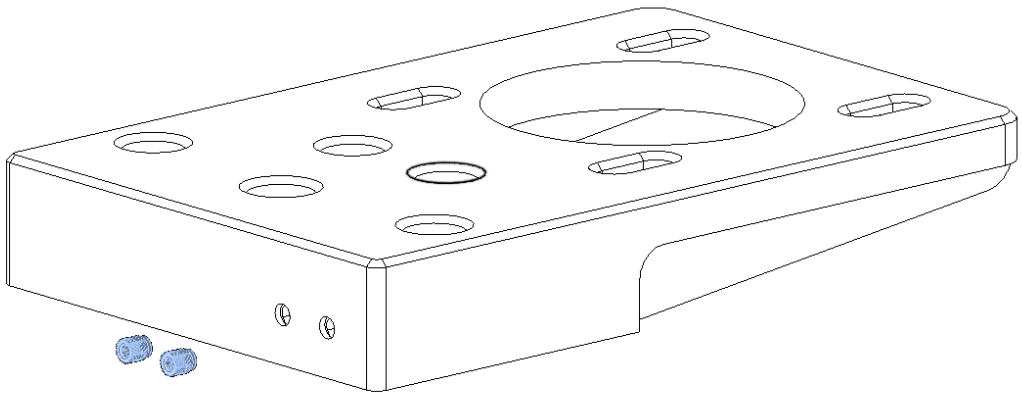

M2-THREADED-HEAT-INSERT

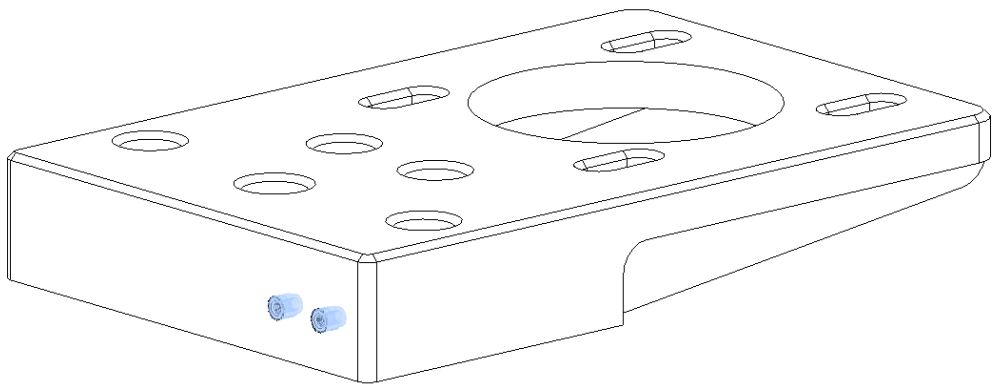

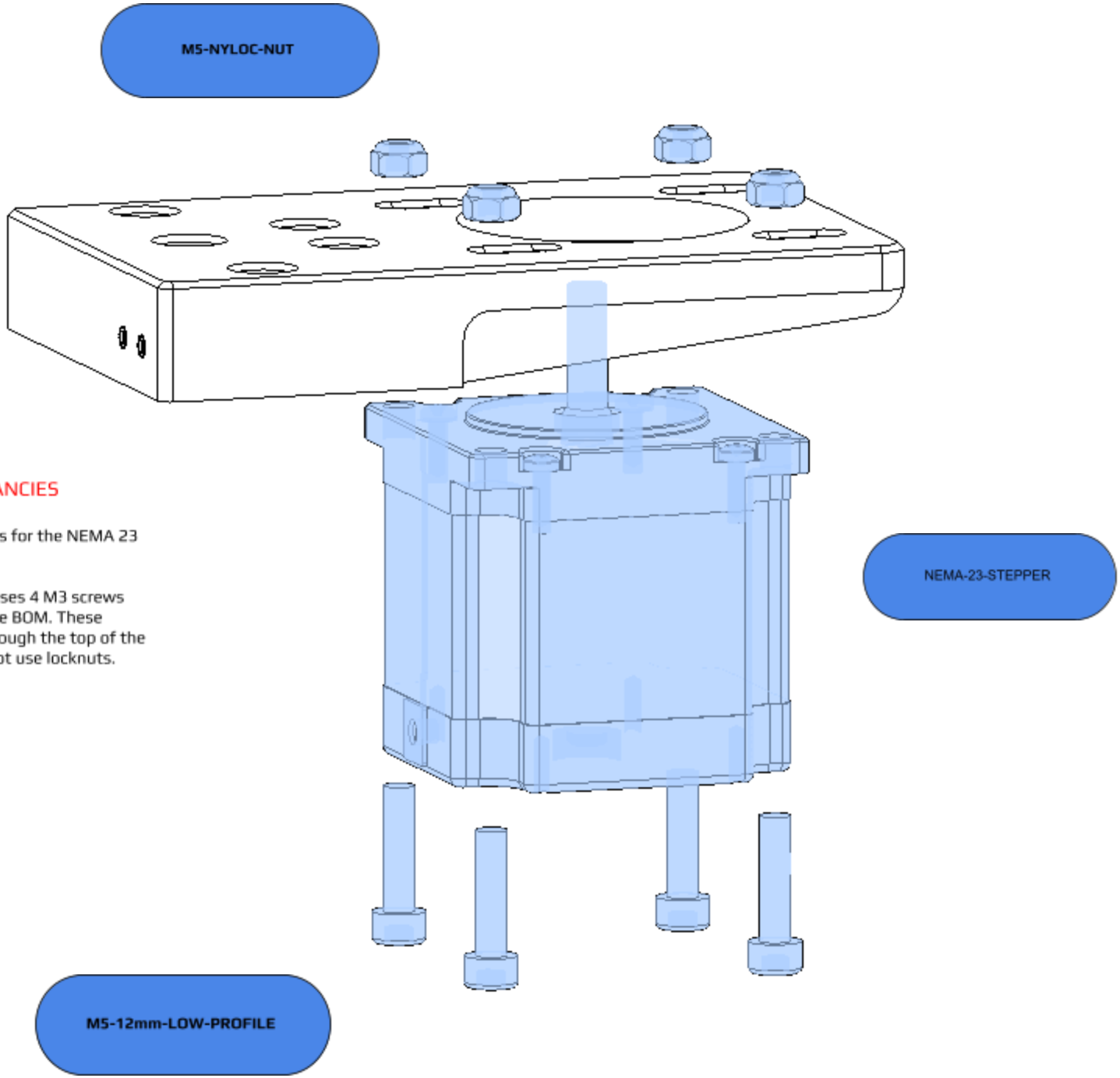

VERSION DISCREPANCIES

The steps shown here is for the NEMA 23 Z version.

The NEMA 17 version uses 4 M3 screws that are not listed in the BOM. These screws are inserted through the top of the motor mount and do not use locknuts.

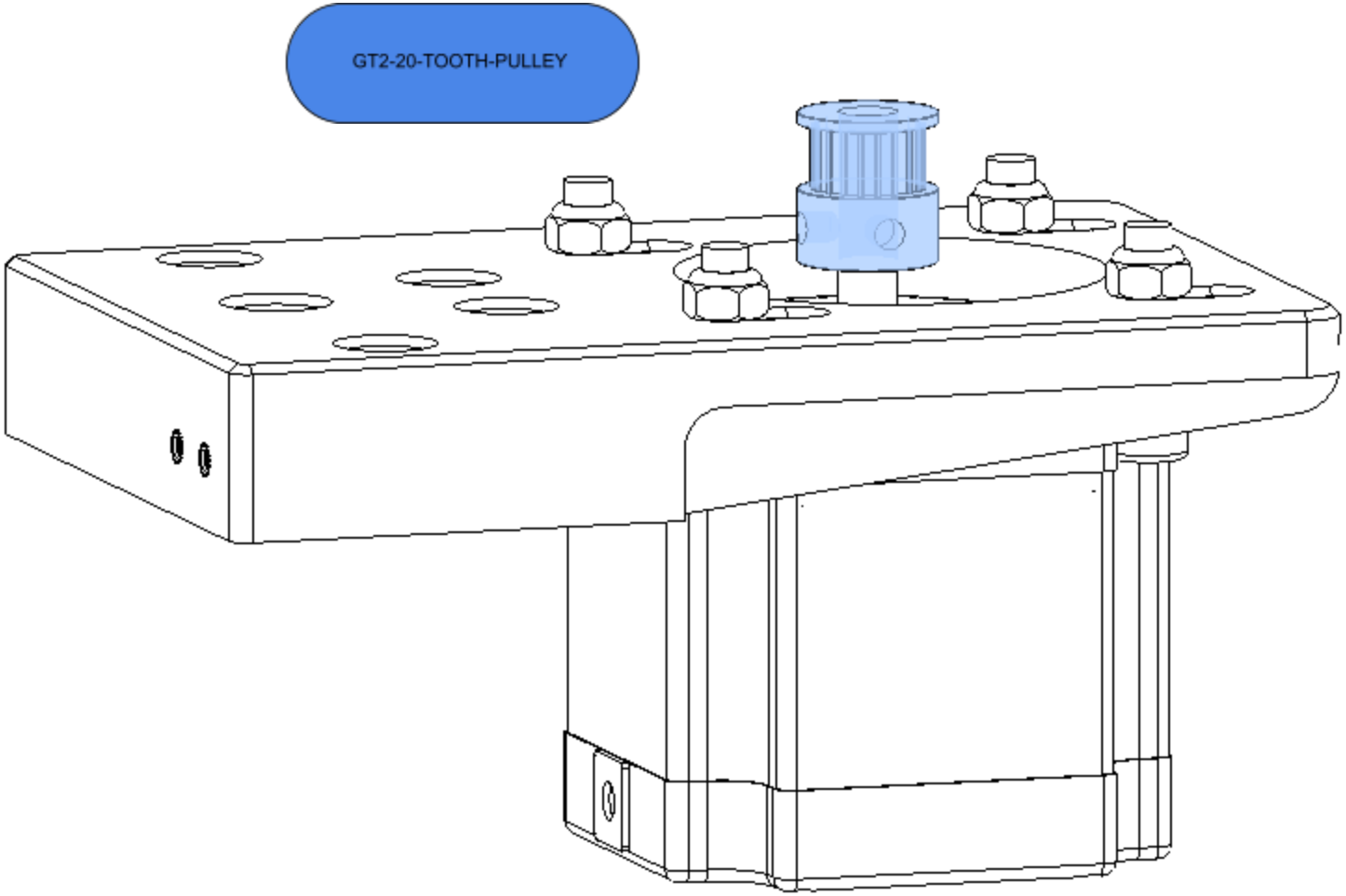
GT2-20-TOOTH-PULLEY

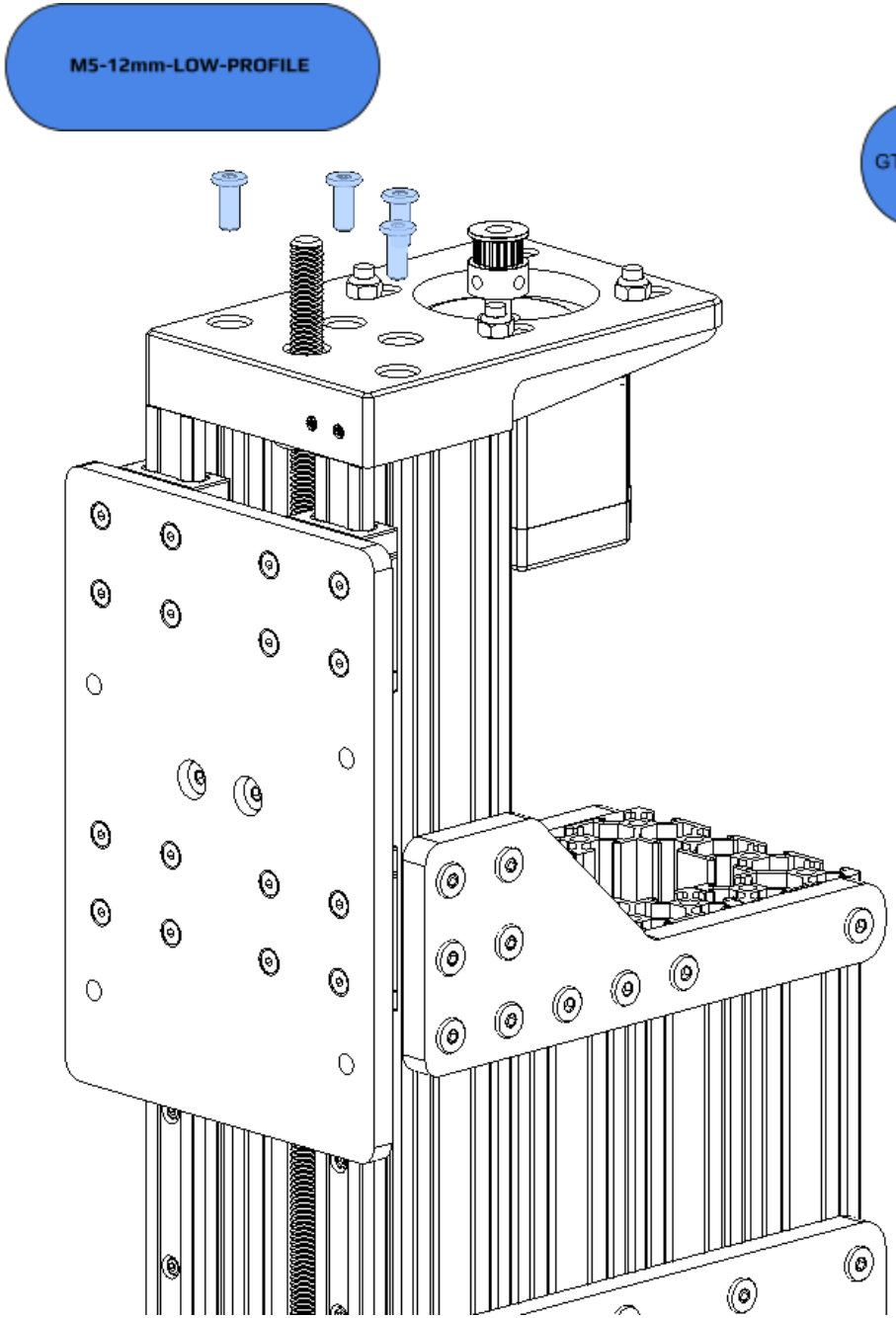
M5-12mm-LOW-PROFILE

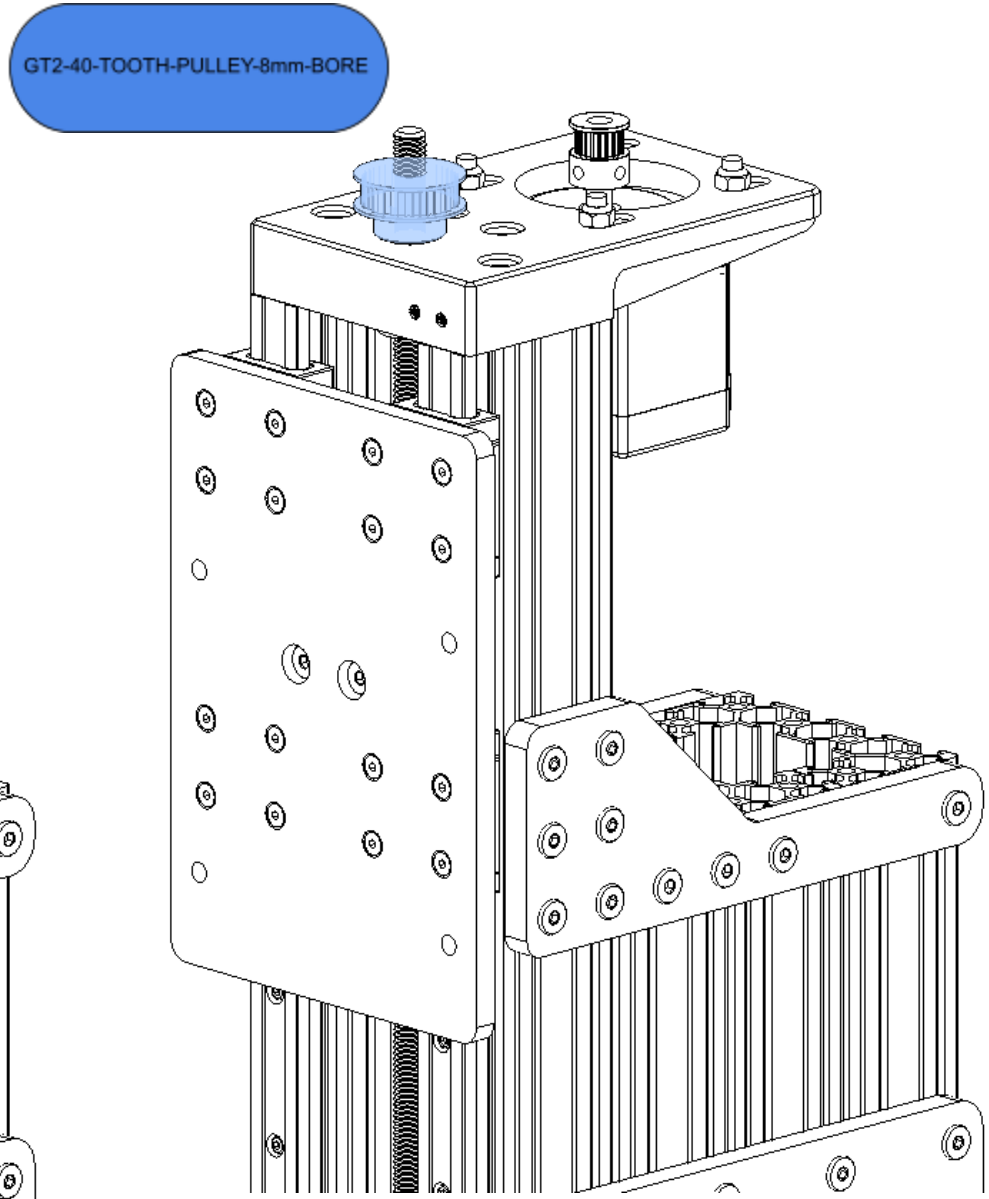
GT2-40-TOOTH-PULLEY-8mm-BORE

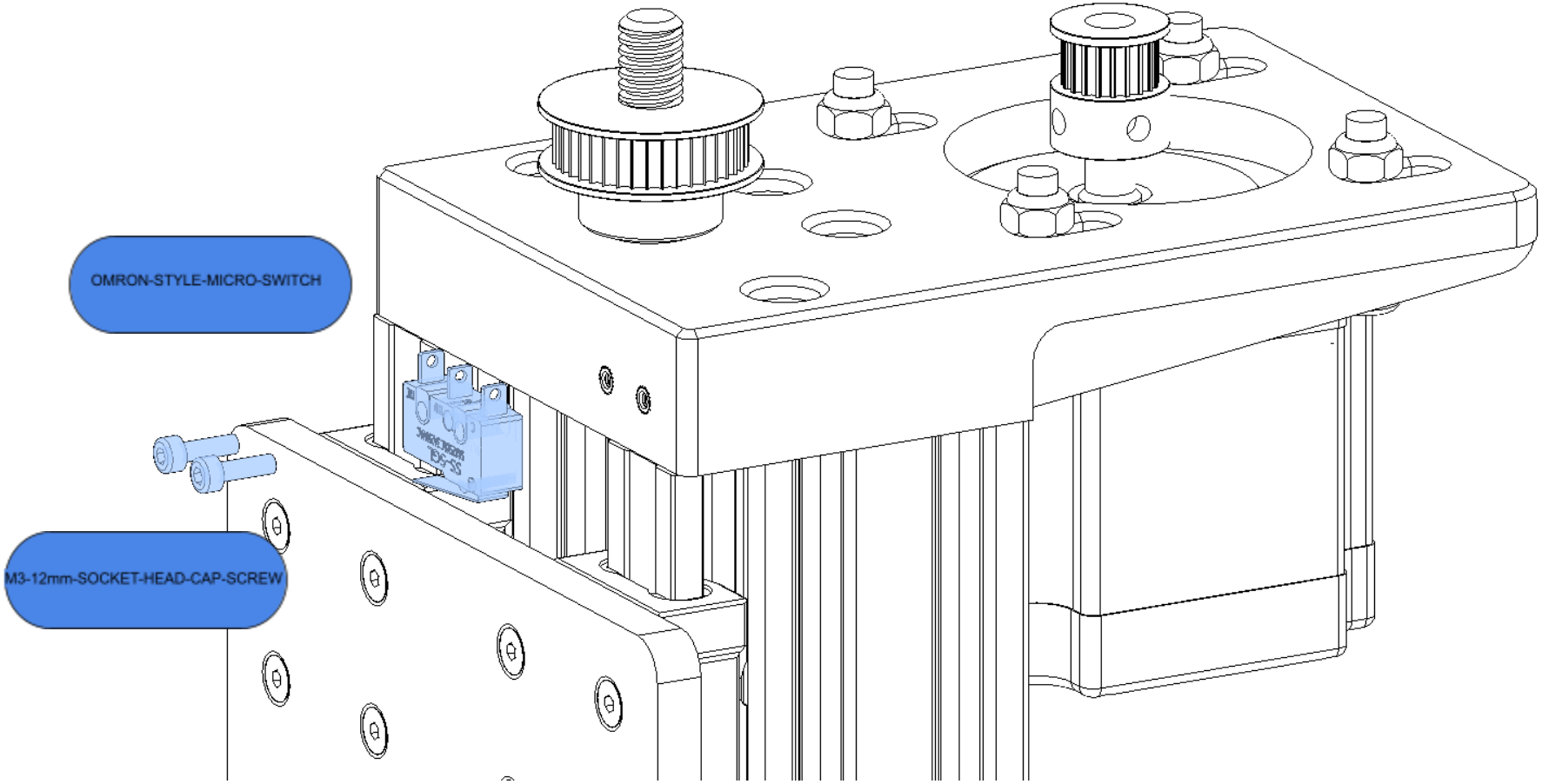
OMRON-STYLE-MICRO-SWITCH
M3-12mm-SOCKET-HEAD-CAP-SCREW

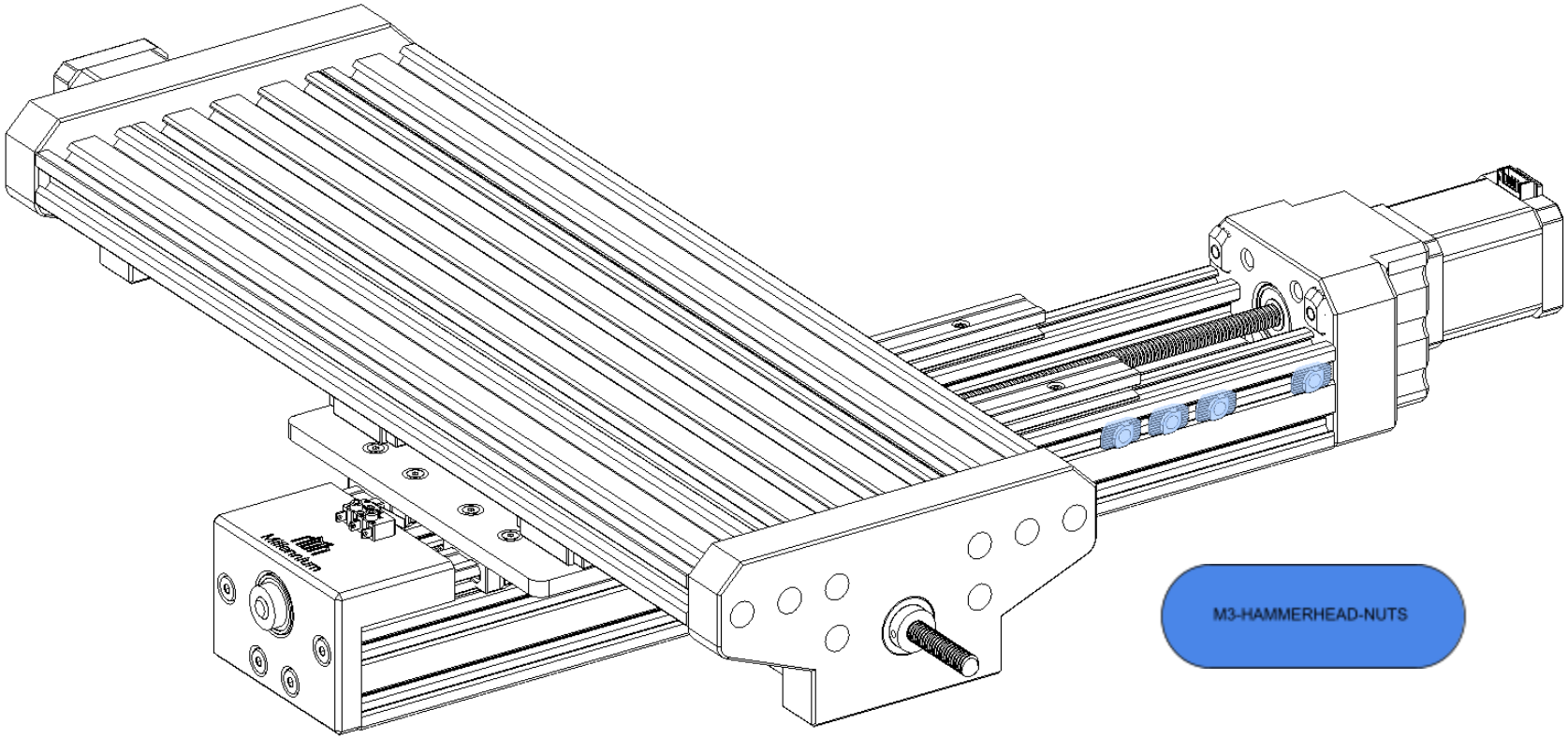
M3-HAMMERHEAD-NUTS

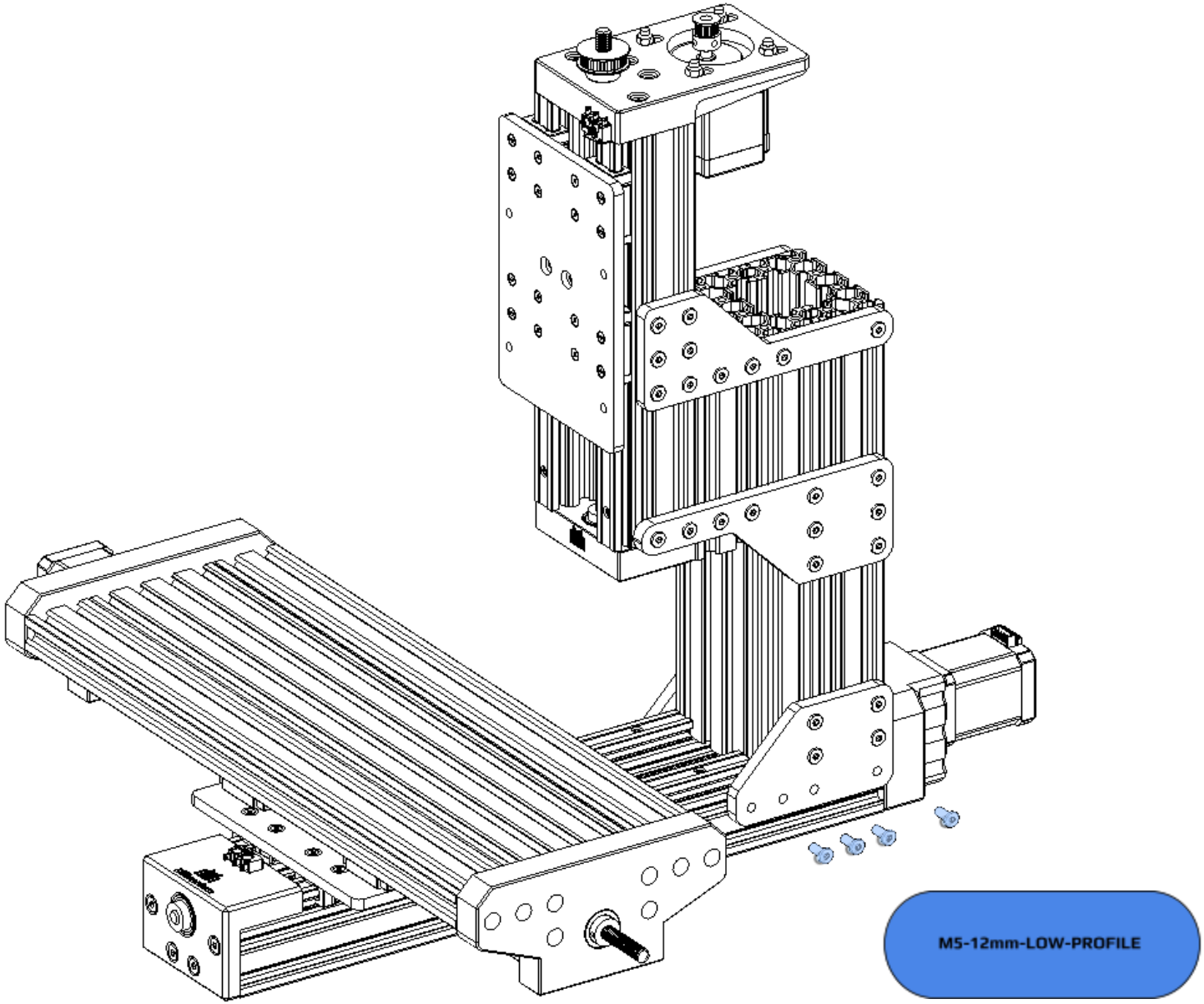
M5-12mm-LOW-PROFILE

BELT IT UP

The last step after installing your spindle mount is not shown in an image.

The last step is to install the belt between the 40 tooth and 20 tooth pulleys. To do this loosen the nema 23 slightly, add the 230mm gt2 belt and add tension by pulling the motor through the mounting grooves. Tighten the nuts once the desired tension is met.

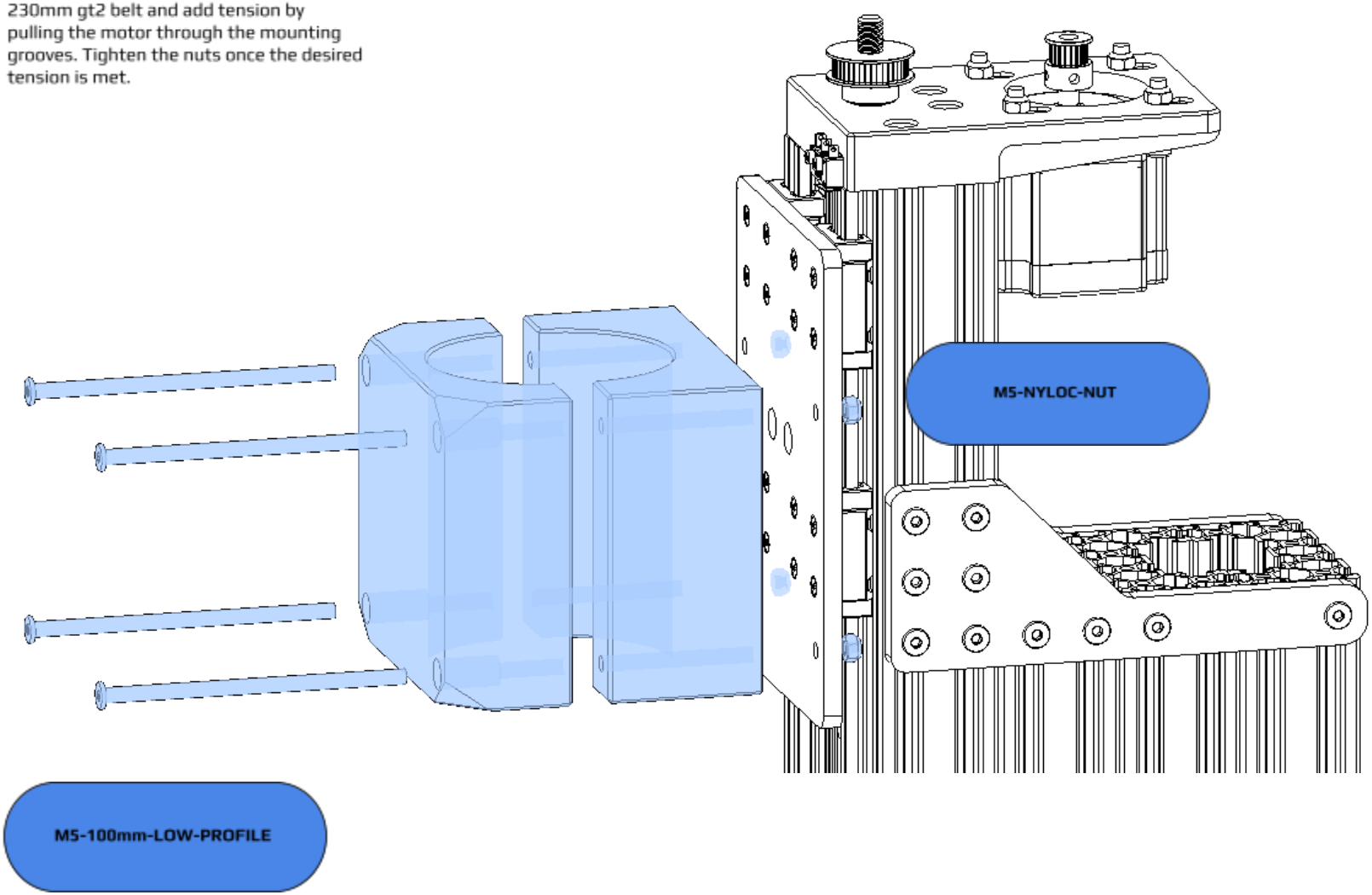

ELECTRONICS

NOTE ON ELECTRONICS :

The minimill does not have any officially supported electronics, this is due to the fact that when it comes to CNC electronics everyone has their preferred ways of setting everything up to best meet their needs. In lieu of an officially supported parts list this section will contain a curated list of recommended components.

CONTROL BOARDS :

The control board of your CNC machine acts as the machine's brain, controlling stepper pulses and decoding Gcode files and translating them into actual machine motion. Because the minimill runs a combination of relatively low amperage steppers the control board does not require external stepper drivers found on other CNC machines, that isn't to say that you can't use them for your build it just means that the boards present in the list will only support integrated stepper motors. The list is as Follows

1. **The 6 pack or 4x 2209 esp32 boards** made by open source developer Bart Dring https://www.tindie.com/stores/33366583/ these relatively low cost boards are spec'd with 4 to 6 integrated TMC 2209 silent stepstics capable of outputting a continuous 2 Amps to steppers, controlled by an ESP32 and running Bart’s own custom firmware can be used via usb and your favorite Gcode sender or over wifi/bluetooth for remote control of your CNC. With extra features such as adjustment of almost all parameters including motor current through any serial terminal these boards are a more high tech option on a budget than similar boards.

2. **MKS DLC v2.0** whilst the cheapest board on this list the MKS DLC v2.0 is more than capable at running your CNC with very little hassle. It runs an 8 bit processor with external pololu style stepsticks of your choosing and operates using stock GRBL and that's about it. It doesn't have a web control interface although one can be added via Octo GRBL plugins for octoprint and all stepper parameters such as current must be set manually.

3. **Duet 2/maestro/3** these boards are on the expensive end of this list and there is a reason for that. With the addition of duet 3Ds Beta CNC web interface these boards have come out of the realm of 3D printers into the Realm of CNC. Each generation of board comes with a different set of integrated stepper drivers with the lowest having a max current output of 2.4 Amps and the highest having a max output of a theoretical 6.3 Amps peak. These boards support stepper daisy chaining so if you’re planning on adding a ludicrous amount of extra steppers to your mill for whatever reason these boards are a must. With the power that these boards have it is safe to say that they are overkill for a 3 axis mill

4. **SKR boards running rep rap firmware** this admittedly is a little bit of a hack but some SKR 3D printer boards have been hacked to run the same reprap firmware used on the duet boards and therefore come with the same benefits if set up correctly and with the SKR network adapter but at a significantly lower price. They however don't support stepper expansions so you'll be stuck with the same amount of steppers as the board comes with.

FIRMWARE

Each of the control boards in the curated list must be loaded with CNC capable firmware. By CNC capable we mean that it must come with the ability to interact with a decent form of control software for ease of operation (such as universal Gcode sender UGS or reprap CNC web interface) so firmwares used for 3D printers like Marlin or klipper will not be recommended due to the lack of control software for CNC specifically out in the world right now.

1. **GRBL** the grandfather of desktop CNC firmwares. It has a lot going for it, its tried and tested, works well for 3 axis machines, fusion 360 comes with a built in post processor for it and control boards that use it are relatively cheap but has no provision for a web interface without using a raspberry pi running octo GRBL and has no fancy features like current control through software.

2. **GRBL_ESP32 soon to be FluidNC** This is an updated version of GRBL which runs on standard esp32 dev boards plugged into a socket on a larger control board, its open source, well documented and works with the vast ecosystem already set up for the original GRBL so no chasing around for new post processors or control softwares. They do however, as far as we're aware, only run on specific hardware that can be purchased via Bart Dring's tindie store (see link above) but are well worth it for their suite of advanced features.

Note : at the time of writing the Dev team for GRBL_esp32 is soon going to shift all their focus to FluidNC the evolution of GRBL_esp32 and will slowly start phasing out support to GRBL_esp32. For the most up to date support we recommend you start with FluidNC.

3. **REPRAP firmware** is by far the most advanced firmware on this list however it doesn't work with traditional G Code senders like UGS but have no fear as there is Reprap CNC web server version out in the wild which can fulfill the role left from the absence of other control softwares. With features such as independently addressable motors that can be assigned separately to an axis, secure wifi CNC and the chance for near infinite expansion on supported boards it might be the most overkill firmware for this type of machine.

POWER SUPPLY AND CABLES

As Alluded to in prior sections we recommend that you run your systems at 24V or higher if possible as this will make 2 crucial differences. The first being that the steppers motors will be able to retain a greater torque output at a higher RPM and secondly it will reduce the operating temperature of each stepper allowing for you to use plastics like **PLA**. Where possible shielded cable will help shield all steppers and microswitches from EMI induced from components like VFDs and Spindle power lines.

AND FINALLY THANK YOU

Without all your support over the last 2 years the millennium design team would not exist.
Thank you for all the kind words and all the constructive criticism.
We all hope that you enjoy your new robot and stay safe while using it.