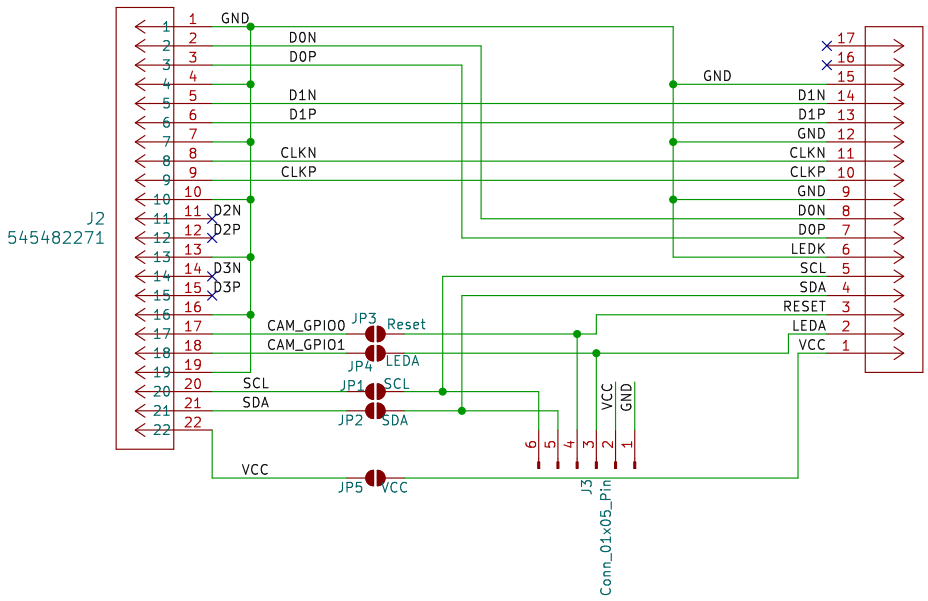

ST7701 Pinout

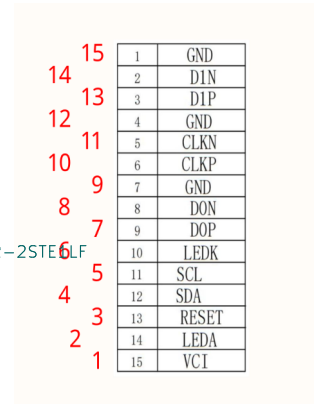

CM5 IO Board pinout

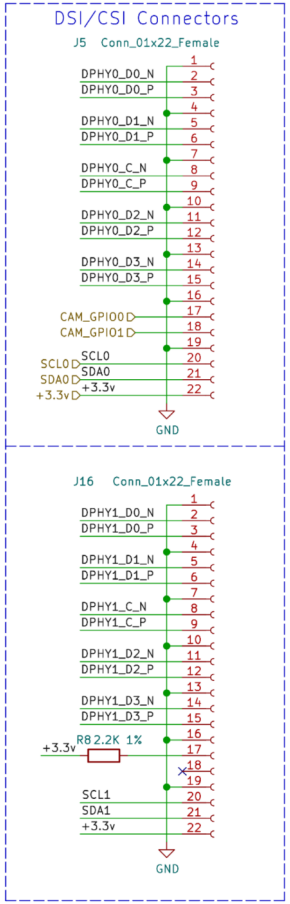

RPi Reference Adapter

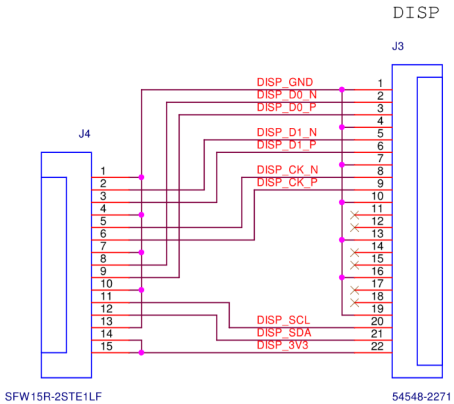

Sheet: /
File: CMIO-DSI-Adapter.kicad_sch

Title:

Size: A4	Date:	**Rev:**
KiCad E.D.A. 8.0.4		Id: 1/1