[1. 진리표 문제] 출처 : Gemini

a. F = XY'Z + X'Y + Y'Z'

b. G = X'Z + (X + Y')(Y + Z)

c. H = W'X + YZ' + WX'Y + W'Y'Z + XYZ'

a

X	Y	Z	F
0	0	0	1
0	0	1	0
0	1	0	1
0	1	1	1
1	0	0	1
1	0	1	1
1	1	0	0
1	1	1	0

b

X	Y	Z	G
0	0	0	0
0	0	1	1
0	1	0	0
0	1	1	1
1	0	0	0
1	0	1	1
1	1	0	1
1	1	1	1

c.

W	X	Y	Z	H
0	0	0	0	0
0	0	0	1	1
0	0	1	0	1
0	0	1	1	0
0	1	0	0	1
0	1	0	1	1
0	1	1	0	1
0	1	1	1	1
1	0	0	0	0
1	0	0	1	0
1	0	1	0	1
1	0	1	1	1
1	1	0	0	0
1	1	0	1	0
1	1	1	0	1
1	1	1	1	0

[2. 불 대수 간소화 문제]

a. x'y + xyz' + xyz

b. x'yz' + xyz' + x'y'z

c. a'b'c' + a'b'c + a'bc + abc

d. x'y'z' + x'yz' + xy'z + xyz

e. xy'z + xy'z' + x'yz' + x'y'z' + xyz

풀이

a $x'y + xy(z'+z)$

$= x'y + xy$

$= (x'+x)y$

$= y$

b $(x'+x)yz + x'y'z$

$\therefore yz + x'y'z$

c $a'b'(c+c') + (a'+a)bc$

$\therefore a'b' + bc$

d $x'z'(y'+y) + xz(y'+y)$

$\therefore x'z' + xz$

e $xy'z + xy'z' + x'yz' + x'y'z' + xyz$

$xz(y'+y) + (x+x')y'z' + x'yz'$

$= xz + y'z' + x'yz'$

$\Rightarrow xz + z'(y' + x'y)$

$\therefore xz + y'z' + x'z'$

[3. 회로도 구현 문제]

a. A'B + BC' + A'C'

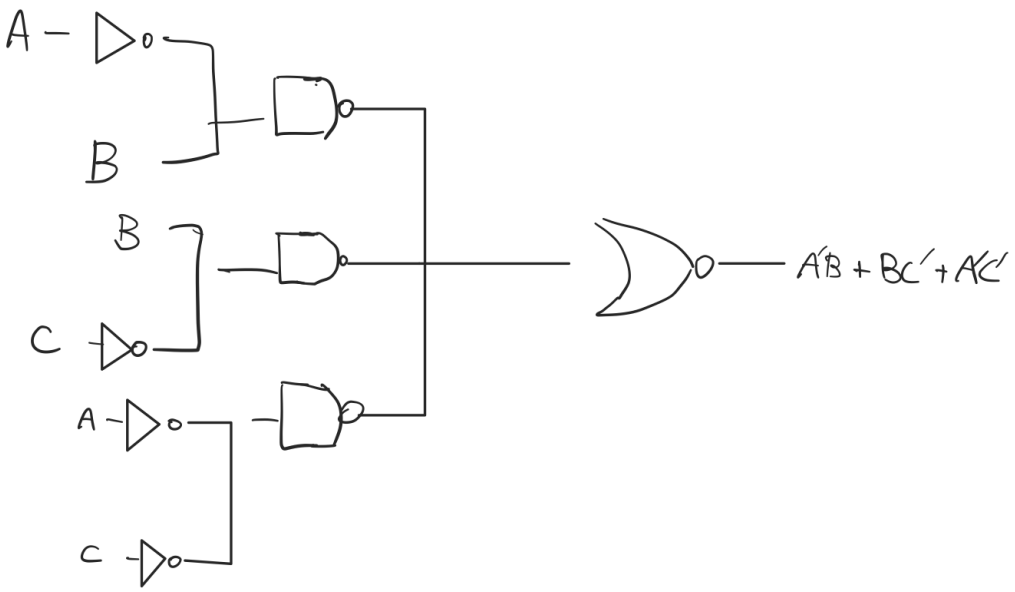

b. X'Y + Z(X' + Y)

b

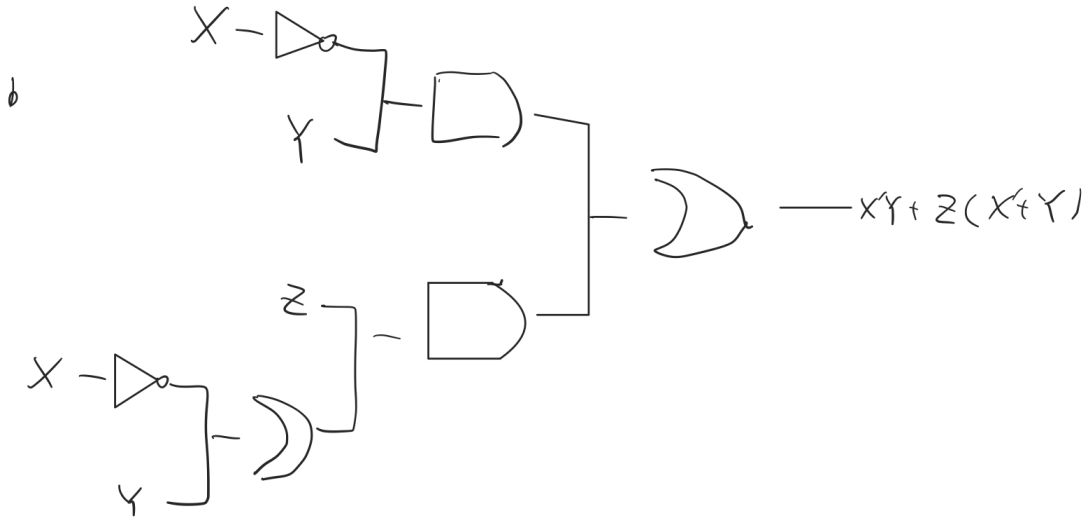

c. V'Y(W + X'Z) + (V'W + X')(Y + W'Z)'

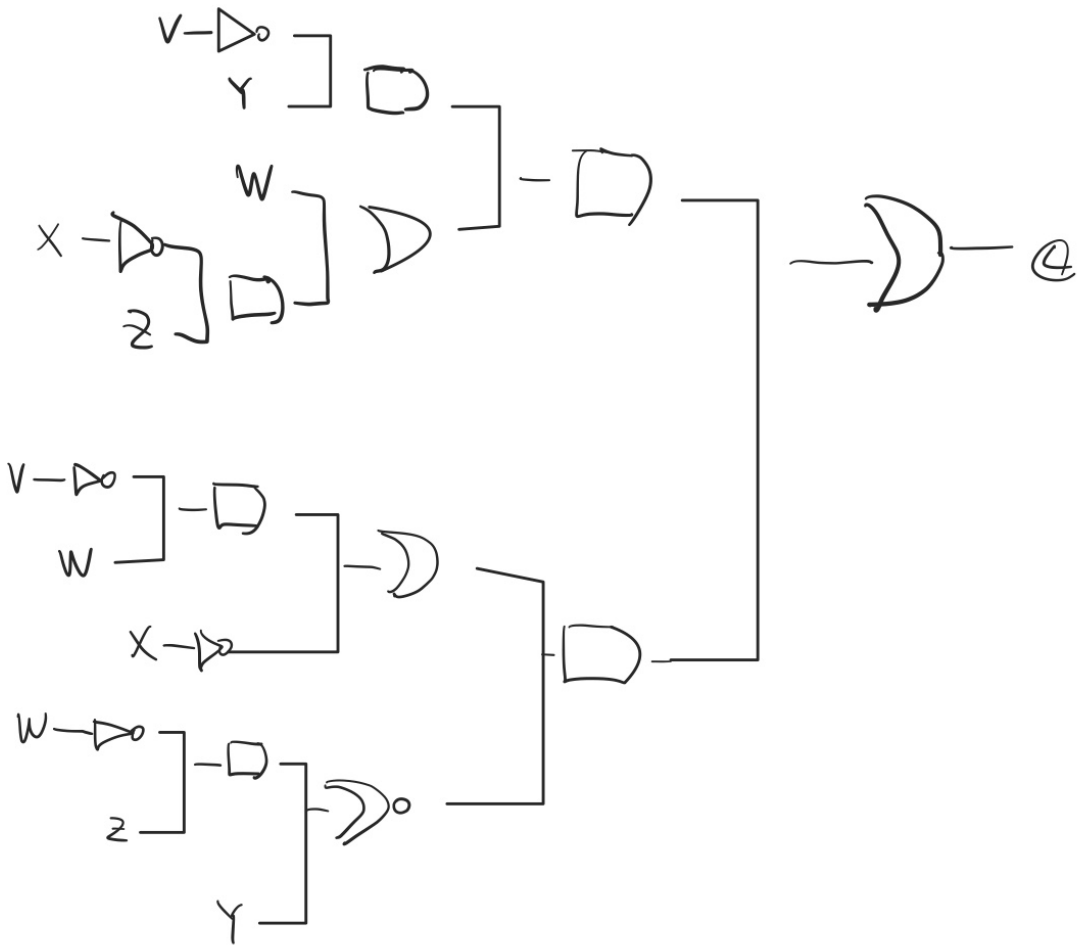

[4. 회로 해석 및 SOP 도출 문제]

```
w ──┐
    ├─[ NOR  ]──┐
x ──┘           │
                ├─[ AND ]──[ NOT ]── g (최종 출력)
y ──┐           │
    ├─[ NAND ]──┘
z ──┘
```

$$\{(w+x)' \cdot (yz)'\}' = g$$

$$w'x' \cdot (y+z)$$

$$(w'x'y' + w'x'z)'$$

$$= wxy \cdot wxz' \quad \therefore g$$