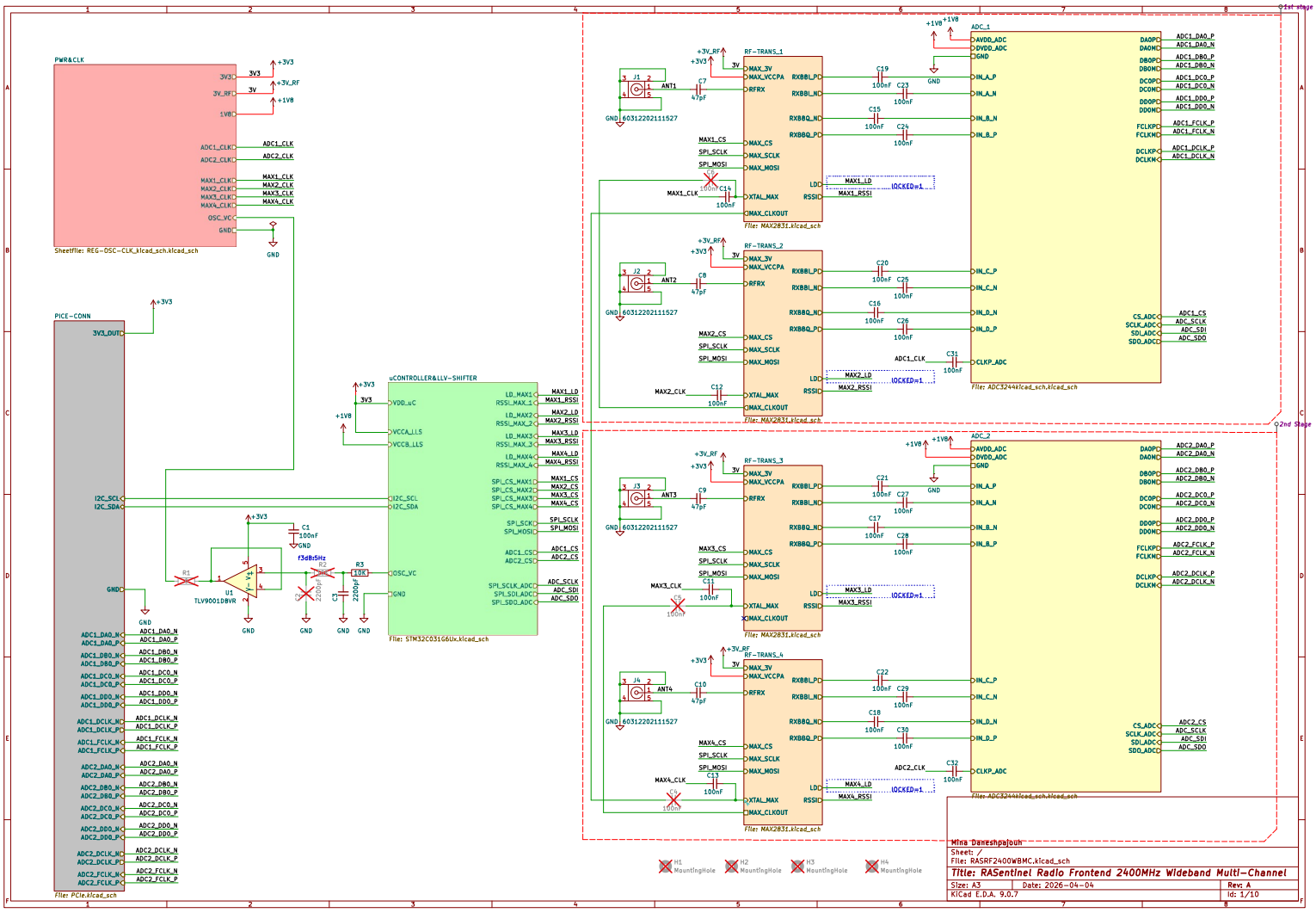
1st stage
2nd Stage
PWR&CLK
Sheetfile: REG-OSC-CLK_klcad_sch.klcad_sch
PICE-CONN
File: PCIe.klcad_sch
uCONTROLLER&LLV-SHIFTER
File: STM32C031G6Ux.klcad_sch
RF-TRANS_1
RF-TRANS_2
RF-TRANS_3
RF-TRANS_4
File: MAX2831.klcad_sch
ADC_1
ADC_2
File: ADC32448klcad_sch.klcad_sch
TLV9001DBVR
f3dB:5Hz
J1
J2
J3
J4
ANT1
ANT2
ANT3
ANT4
60312202111527
MAX1_LD
MAX1_RSSI
MAX2_LD
MAX2_RSSI
MAX3_LD
MAX3_RSSI
MAX4_LD
MAX4_RSSI
LOCKED=1
H1 MountingHole
H2 MountingHole
H3 MountingHole
H4 MountingHole
Mina Daneshpajouh
Sheet: /
File: RASRF2400WBMC.klcad_sch
Title: RASentinel Radio Frontend 2400MHz Wideband Multi-Channel
Size: A3
Date: 2026-04-04
Rev: A
KiCad E.D.A. 9.0.7
Id: 1/10

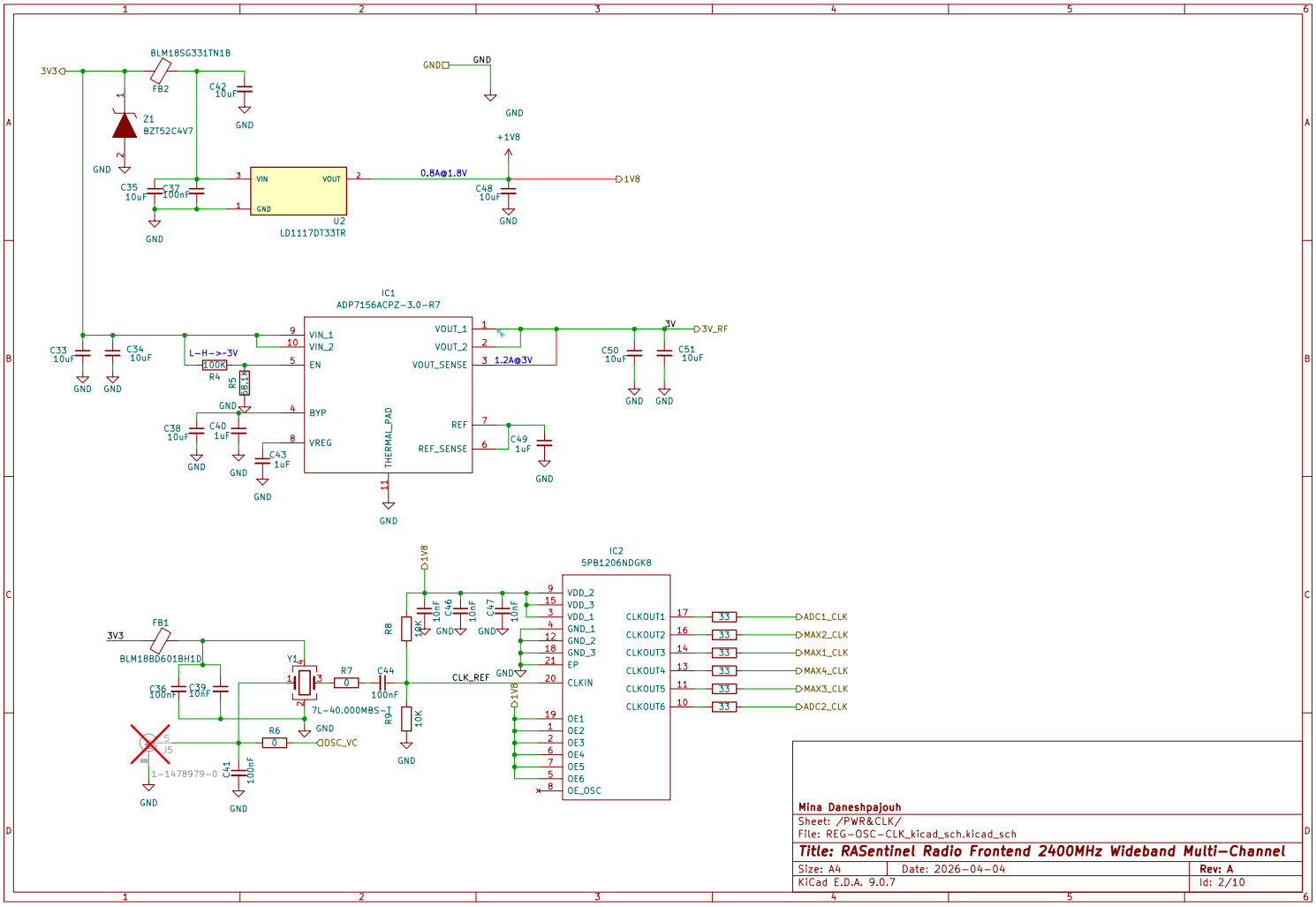


Mina Daneshpajouh

Sheet: /PWR&CLK/

File: REG-OSC-CLK_kicad_sch.kicad_sch

**Title: RASentinel Radio Frontend 2400MHz Wideband Multi-Channel**

| Size: A4 | Date: 2026-04-04 | Rev: A |
|---|---|---|
| KiCad E.D.A. 9.0.7 | | Id: 2/10 |

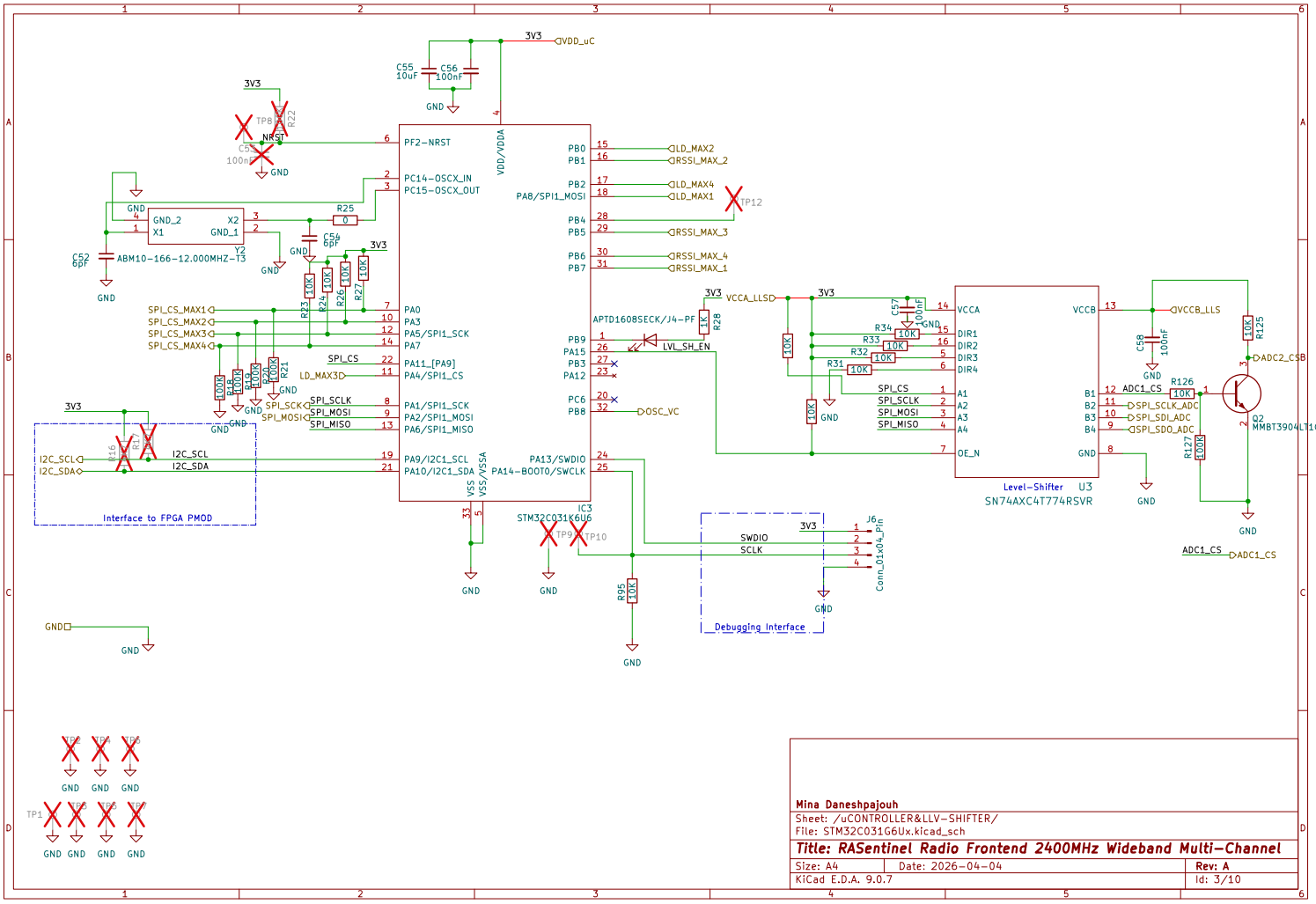


**Mina Daneshpajouh**

Sheet: /uCONTROLLER&LLV-SHIFTER/

File: STM32C031G6Ux.kicad_sch

***Title: RASentinel Radio Frontend 2400MHz Wideband Multi-Channel***

| Size: A4 | Date: 2026-04-04 | **Rev: A** |
|---|---|---|
| KiCad E.D.A. 9.0.7 | | Id: 3/10 |

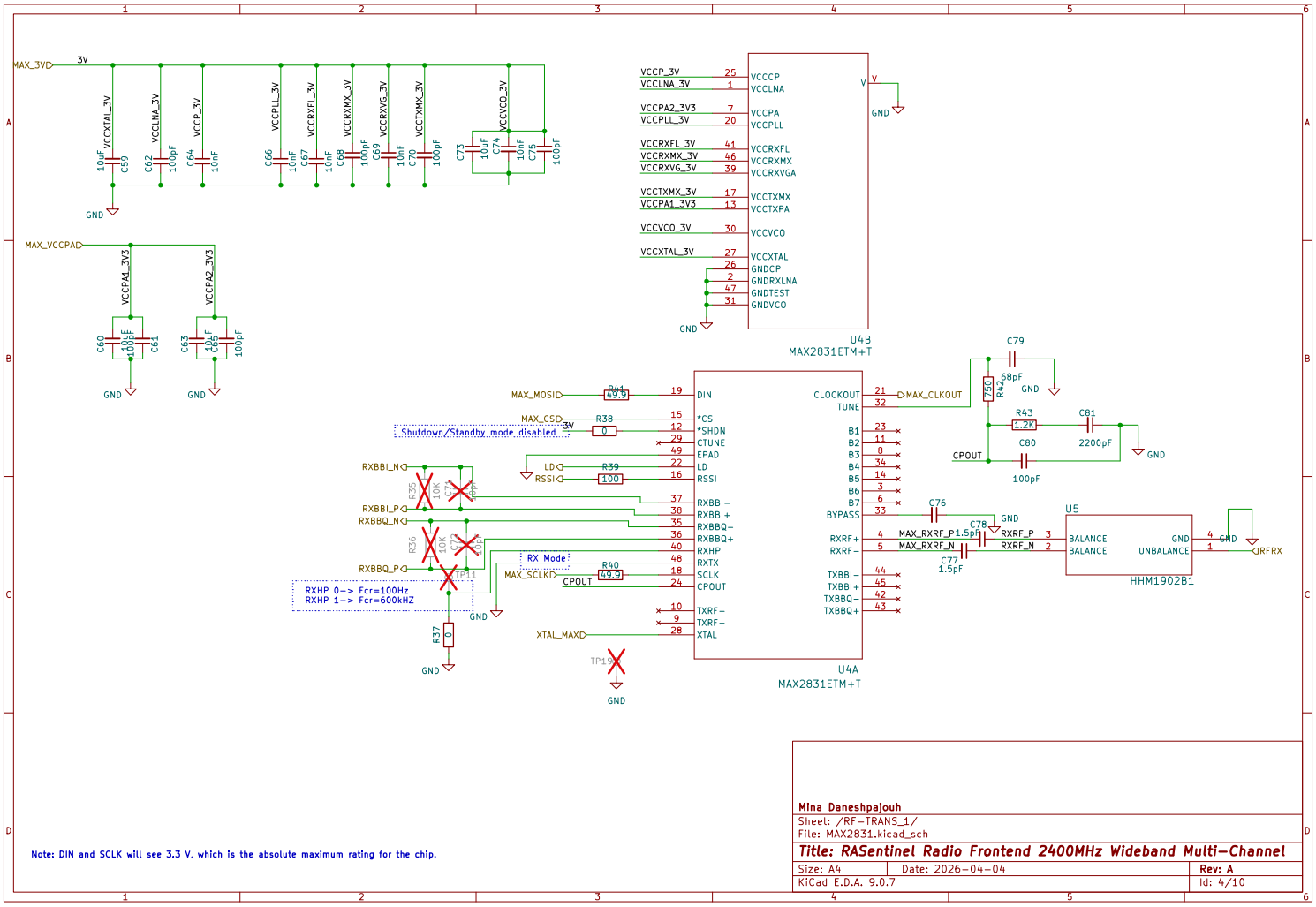


Note: DIN and SCLK will see 3.3 V, which is the absolute maximum rating for the chip.

Mina Daneshpajouh

Sheet: /RF-TRANS_1/
File: MAX2831.kicad_sch

**Title: RASentinel Radio Frontend 2400MHz Wideband Multi-Channel**

| Size: A4 | Date: 2026-04-04 | Rev: A |
|---|---|---|
| KiCad E.D.A. 9.0.7 | | Id: 4/10 |

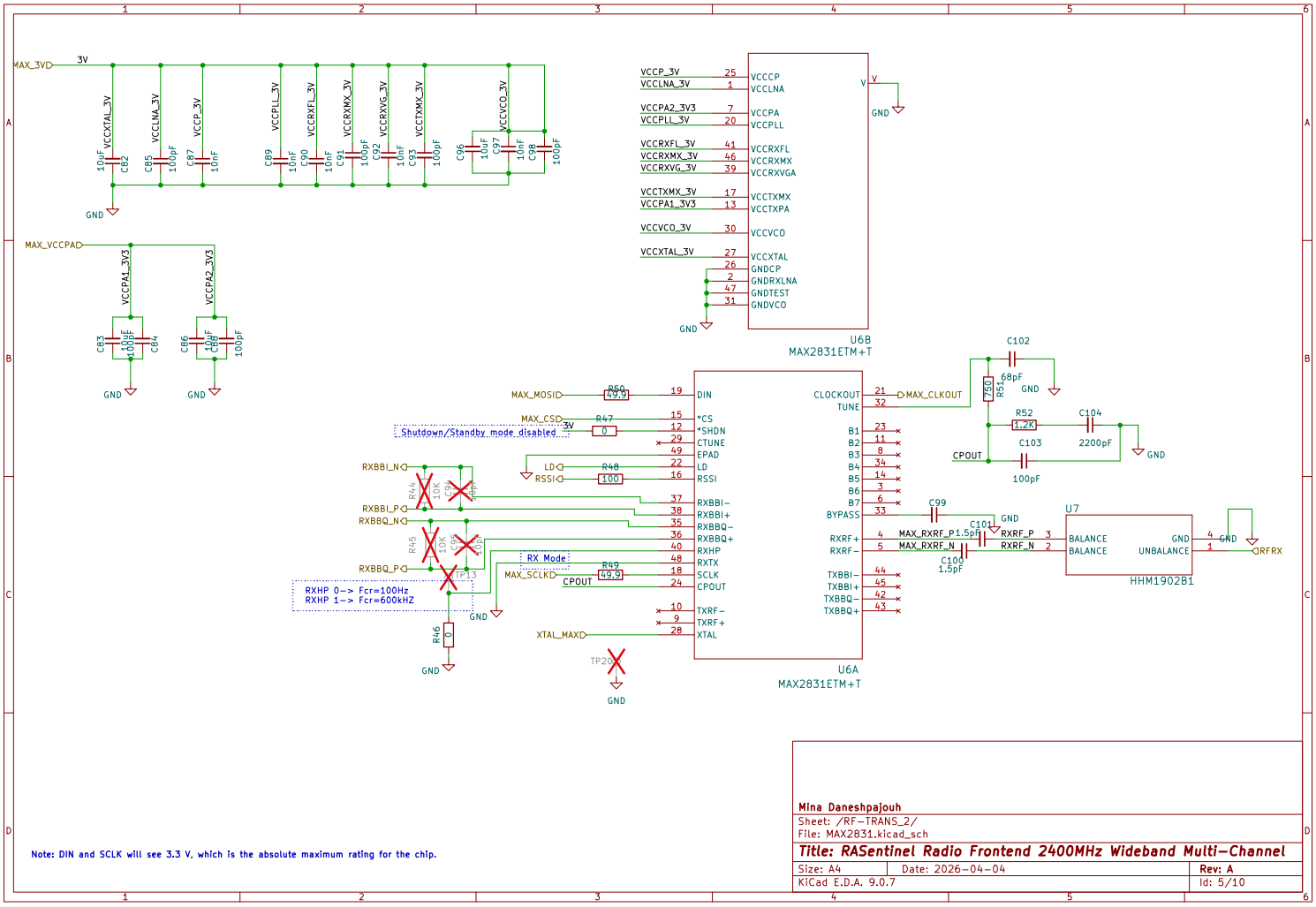


Note: DIN and SCLK will see 3.3 V, which is the absolute maximum rating for the chip.

Mina Daneshpajouh

Sheet: /RF−TRANS_2/
File: MAX2831.kicad_sch

**Title: RASentinel Radio Frontend 2400MHz Wideband Multi−Channel**

| Size: A4 | Date: 2026−04−04 | Rev: A |
|---|---|---|
| KiCad E.D.A. 9.0.7 | | Id: 5/10 |

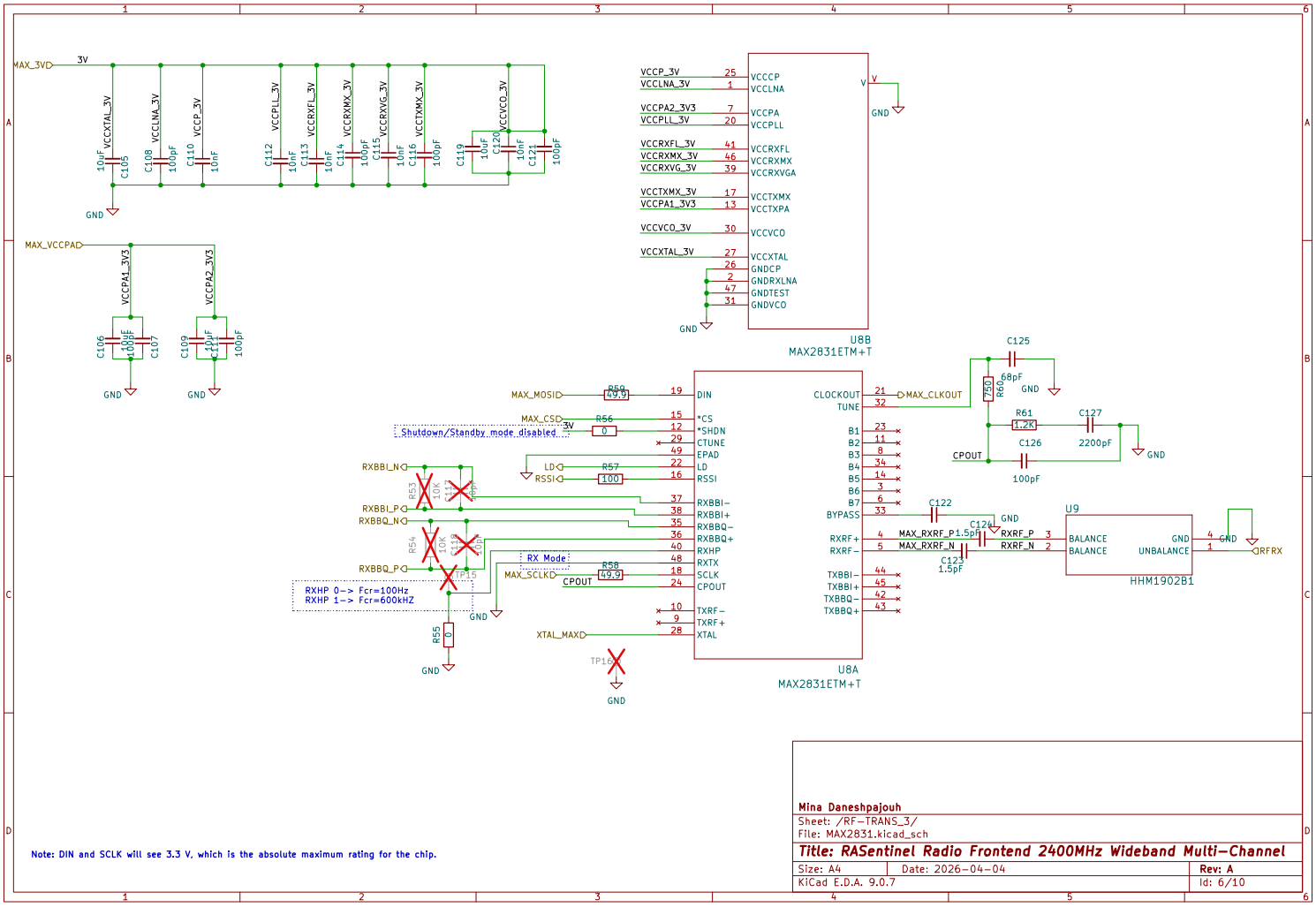


Note: DIN and SCLK will see 3.3 V, which is the absolute maximum rating for the chip.

Mina Daneshpajouh

Sheet: /RF−TRANS_3/
File: MAX2831.kicad_sch

**Title: RASentinel Radio Frontend 2400MHz Wideband Multi−Channel**

| Size: A4 | Date: 2026−04−04 | Rev: A |
|---|---|---|
| KiCad E.D.A. 9.0.7 | | Id: 6/10 |

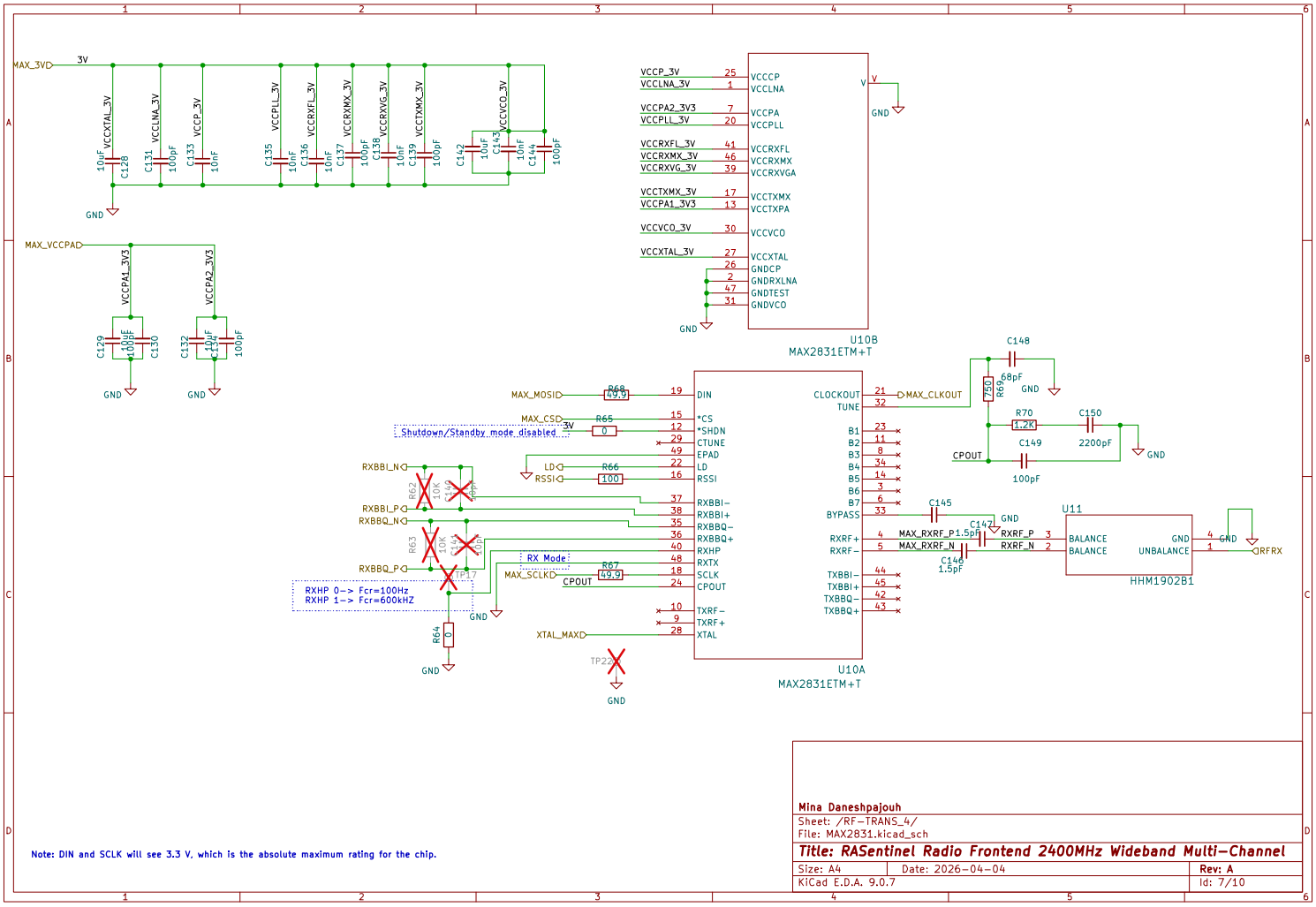


Note: DIN and SCLK will see 3.3 V, which is the absolute maximum rating for the chip.

| | | |
|---|---|---|
| Mina Daneshpajouh | | |
| Sheet: /RF−TRANS_4/ | | |
| File: MAX2831.kicad_sch | | |
| **Title: RASentinel Radio Frontend 2400MHz Wideband Multi−Channel** | | |
| Size: A4 | Date: 2026−04−04 | Rev: A |
| KiCad E.D.A. 9.0.7 | | Id: 7/10 |

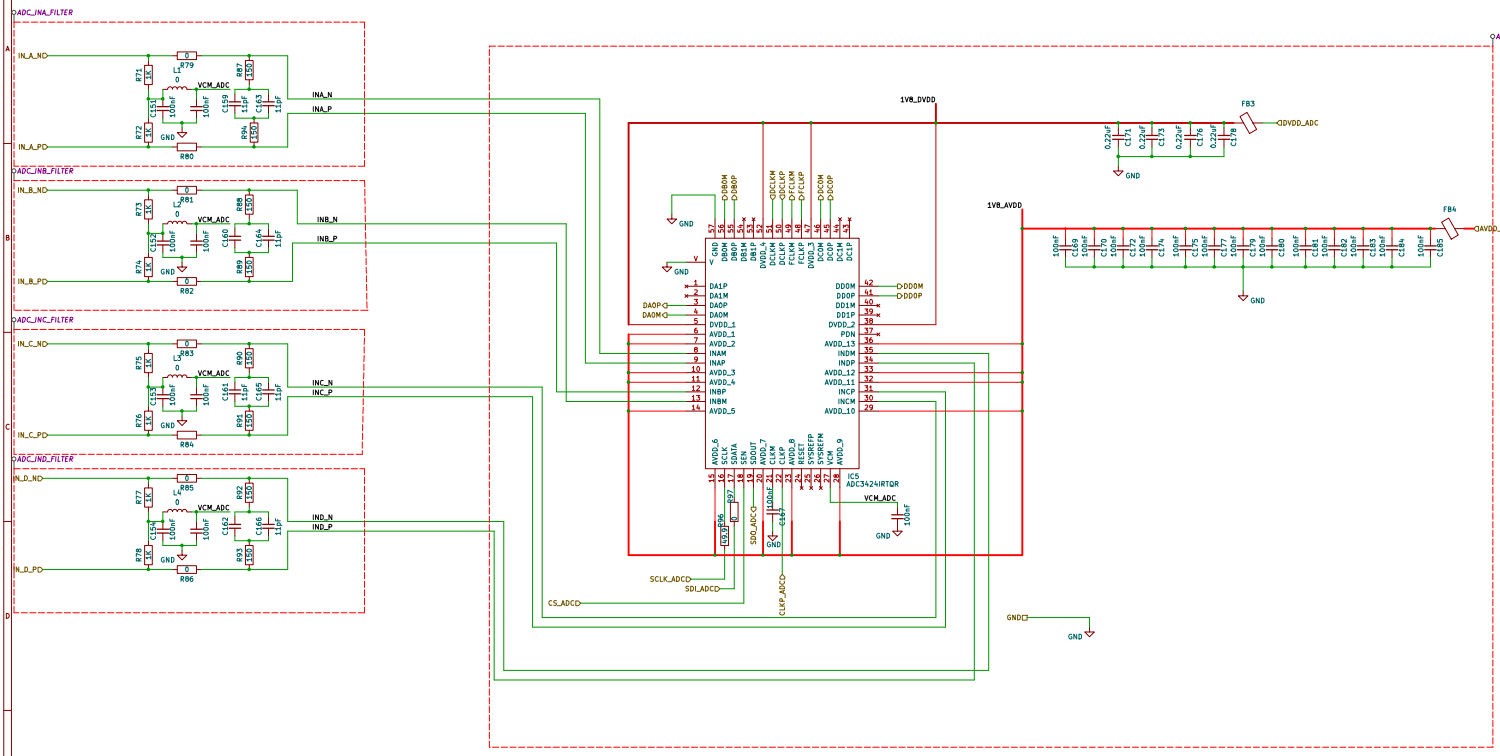


Mina Daneshpajouh
Sheet: /ADC_1/
File: ADC34241cad_sch.kicad_sch

**Title: RASentinel Radio Frontend 2400MHz Wideband Multi-Channel**

| | | |
|---|---|---|
| Size: A3 | Date: 2026-04-04 | Rev: A |
| KiCad E.D.A. 9.0.7 | | Id: 6/10 |

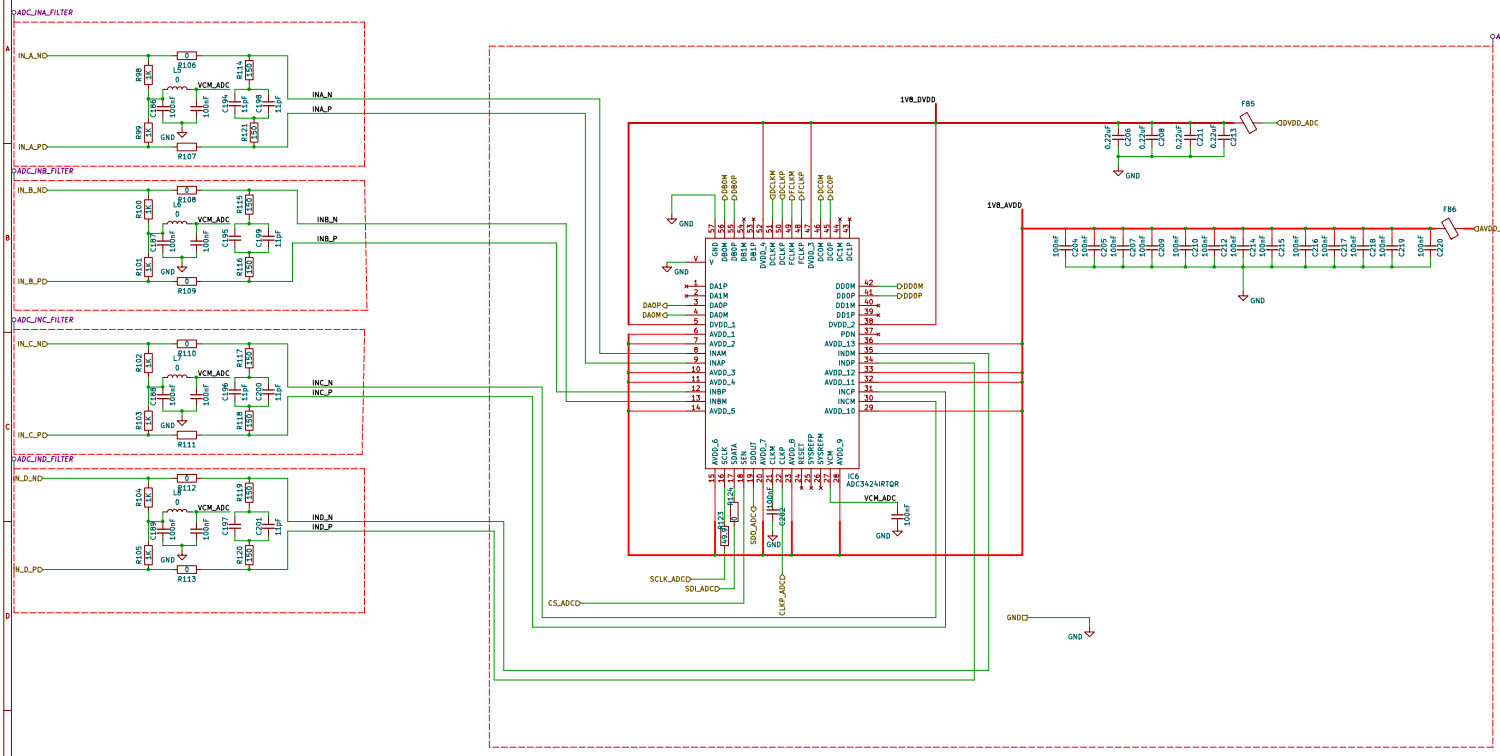


Mina Daneshpajouh
Sheet: /ADC_2/
File: ADC3244kicad_sch.kicad_sch

**Title: RASentinel Radio Frontend 2400MHz Wideband Multi-Channel**

| | | |
|---|---|---|
| Size: A3 | Date: 2026-04-04 | Rev: A |
| KiCad E.D.A. 9.0.7 | | Id: 9/10 |

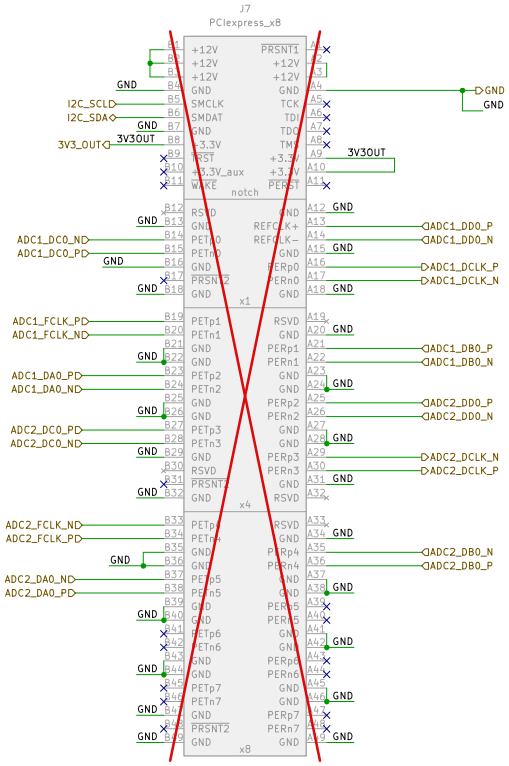


**Mina Daneshpajouh**

Sheet: /PICE-CONN/
File: PCIe.kicad_sch

***Title: RASentinel Radio Frontend 2400MHz Wideband Multi-Channel***

| | | |
|---|---|---|
| Size: A4 | Date: 2026-04-04 | **Rev: A** |
| KiCad E.D.A. 9.0.7 | | Id: 10/10 |