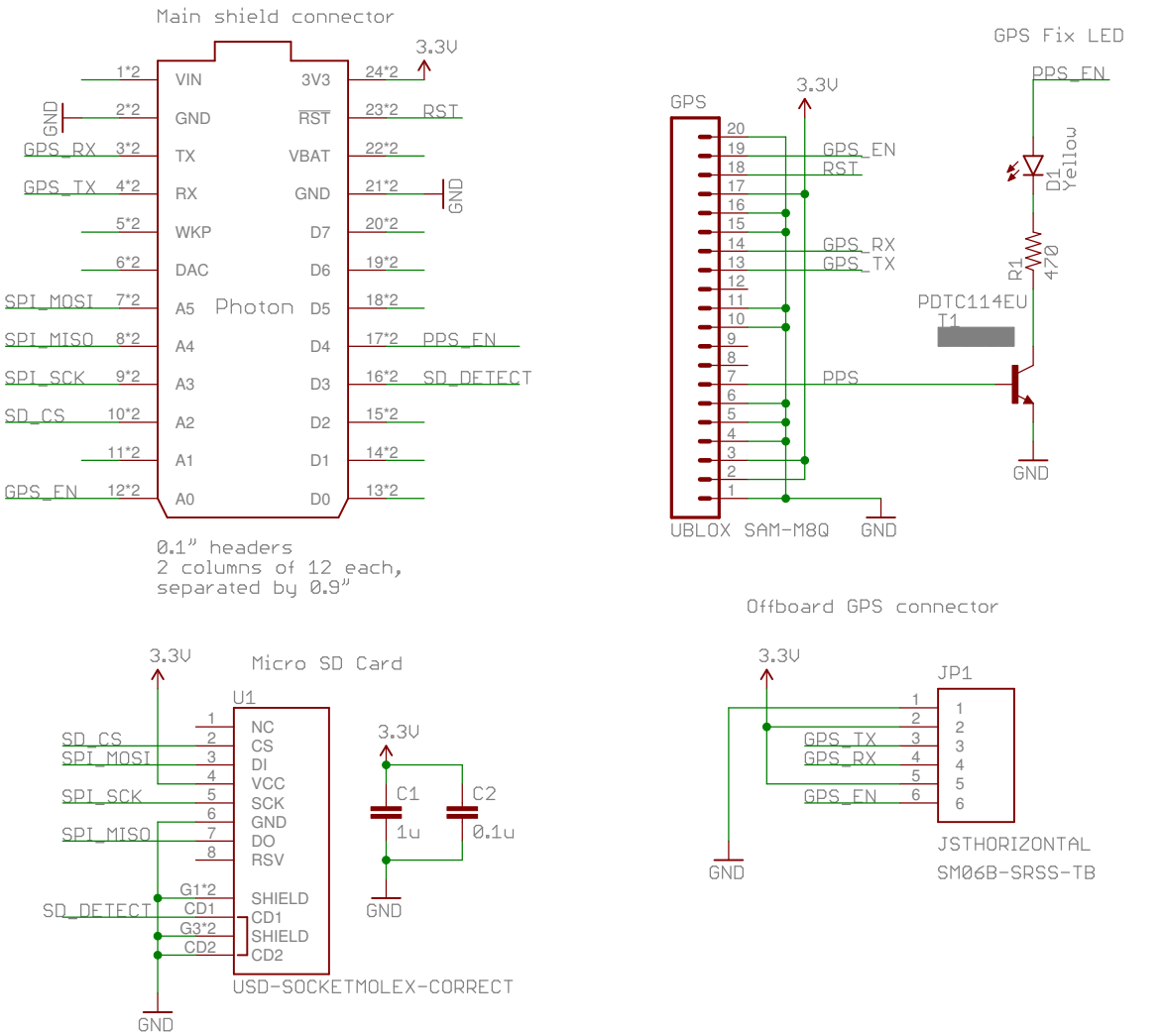
Main shield connector
3.3V
VIN
3V3
GND
RST
TX
VBAT
RX
GND
WKP
D7
DAC
D6
A5
Photon
D5
A4
D4
A3
D3
A2
D2
A1
D1
A0
D0
1*2
2*2
3*2
4*2
5*2
6*2
7*2
8*2
9*2
10*2
11*2
12*2
24*2
23*2
22*2
21*2
20*2
19*2
18*2
17*2
16*2
15*2
14*2
13*2
GND
GPS_RX
GPS_TX
SPI_MOSI
SPI_MISO
SPI_SCK
SD_CS
GPS_EN
RST
GND
PPS_EN
SD_DETECT
0.1" headers
2 columns of 12 each,
separated by 0.9"
GPS Fix LED
GPS
3.3V
PPS_EN
GPS_EN
RST
GPS_RX
GPS_TX
PPS
D1
Yellow
R1
470
PDTC114EU
T1
GND
UBLOX SAM-M8Q
GND
Offboard GPS connector
3.3V
JP1
GPS_TX
GPS_RX
GPS_EN
GND
JSTHORIZONTAL
SM06B-SRSS-TB
3.3V
Micro SD Card
U1
SD_CS
SPI_MOSI
SPI_SCK
SPI_MISO
SD_DETECT
NC
CS
DI
VCC
SCK
GND
DO
RSV
SHIELD
CD1
SHIELD
CD2
G1*2
G3*2
3.3V
C1
1u
C2
0.1u
GND
USD-SOCKETMOLEX-CORRECT
GND