Electrical and Servicing Systems

Eduardo Manuel Godinho Rodrigues

上海大学里斯本学院
ULISBOA SCHOOL, SHANGHAI UNIVERSITY

ULisboa School, Shanghai University

Electrical and Servicing Systems

- Recommended bibliography:

Technical Rules for Low Voltage Installations, “Regras Técnicas das Instalações Elétricas de Baixa Tensão”
(6th Revised and Updated Edition)
Publisher: INCM - Imprensa Nacional Casa da Moeda (Portuguese Edition)

Energy efficiency in buildings: Eficiência Energética nos Edifícios
(2nd Revised and Updated Edition)
Publisher: INCM - Imprensa Nacional Casa da Moeda (Portuguese Edition)

Electrical and Servicing Systems

- Recommended bibliography:

Electrical Installation Guide
Schneider Electric, 2018

Electrical installation handbook - Protection, control and electrical devices
ABB, 6th edition 2010

Electrical Machines, Drives and Power Systems - Theodore Wildi, Pearson New International Edition, 2006

Electrical and Servicing Systems

- Evaluation method::

Continuous evaluation (40%):

Examination test (60%)

Minimum passing grade 60%

Electrical and Servicing Systems

Introduction to the electrical and servicing systems

According to IEC 60038 standard, power grid infrastructure is classified as function of its nominal voltage level:

System	Nominal Voltage (Vn)
LV (Low Voltage)	Vn ≤ 1 kV
MV (Medium Voltage	1 kV < Vn ≤ 35 kV
HV (High Voltage)	35 kV < Vn ≤ 230 kV
EHV (Extra High Voltage)	230 kV < Vn ≤ 800 kV
UHV (Ultra High Voltage)	1000 kV/ 1200 kV

Electrical and Servicing Systems

Introduction

In most countries, electrical installations shall comply with more than one set of regulations, issued by National Authorities or by recognized private bodies. It is essential to take into account these local constraints before starting the design.

National standards in Europe are derived from the IEC 60364 Low-voltage electrical installations.

Electrical and Servicing Systems

Introduction

IEC voltage standards and recommendations for low voltages installations:

Three-phase four-wire or three-wire systems Nominal voltage (V)		Single-phase three-wire systems Nominal voltage (V)
50 Hz	60 Hz	60 Hz
-	120/208	120/240[d]
230[c]	240[c]	-
230/400[a]	230/400[a]	-
-	277/480	-
-	480	-
-	347/600	-
-	600	-
400/690[b]	-	-
1000	-	-

Electrical and Servicing Systems

Introduction

What does 230/400 voltage level mean for Portugal and other countries that follow this standard?

230 V

Single-phase electrical installations

Single-phase loads

400 V

Three-phase electrical installations

Three-phase loads

Electrical and Servicing Systems

Introduction

Some typical loads:

a) Induction motors

b) Resistive type heating applications and incandescent lamps

c) Fluorescent lamps

d) Discharge lamps

e) Led lamps

Electrical and Servicing Systems

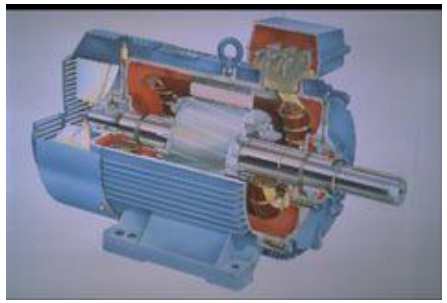

Introduction

Induction motors

They can be found in household appliances such as the washing machine, fridge or hairdryer. On the other hand, they are essential for driving all kinds of mechanical loads in industry.

- Starting current is characterized by having a transient high peak value * → 12 a 15 times the motor rms rated current value
- In the recent past, star-delta starters were used to reduce the starting current.
- Today, variable speed drives are used to limit the starting current electronically.

*Direct start mode

Electrical and Servicing Systems

Introduction to the electrical and servicing systems

Induction motors

They can be found in household appliances such as the washing machine, fridge or hairdryer. On the other hand, they are essential for driving all kinds of mechanical loads.

- 3-phase motor: In = Pn x 1000 / (√3 x U x η x cos φ)
- 1-phase motor: In = Pn x 1000 / (U x η x cos φ)

In: rated current (in amps)
Pn: nominal power (in kW)

η: per-unit efficiency, i.e. output kW / input kW
cos φ: power factor, i.e. kW input / kVA input.

kW	hp	230 V A	380-415 V A	400 V A	440 - 480 V A	500 V A	690 V A
0.18	-	1.0	-	0.6	-	0.48	0.35
0.25	-		-	0.85	-	0.68	0.49
0.37	-		-	1.1	-	0.88	0.64
-	1/2	-	1.3	-	1.1	-	-
0.55	-	2.6	-	1.5	-	1.2	0.87
-	3/4	-	1.8	-	1.6	-	-
-	1	-	2.3	-	2.1	-	
0.75	-	3.3	-	1.9	-	1.5	1.1
1.1	-	4.7	-	2.7	-	2.2	1.6
-	1-1/2	-	3.3	-	3.0	-	-
-	2	-	4.3	-	3.4	-	-
1.5	-	6.3	-	3.6	-	2.9	2.1
2.2	-	8.5	-	4.9	-	3.9	2.8
-	3	-	6.1	-	4.8	-	-
3.0	-	20	-	11.5	-	9.2	6.7
4	-	15	9.7	8.5	7.6	6.8	4.9
-	5	-	9.7	-	7.6	-	-
5.5	-	20	-	11.5	-	9.2	6.7
-	7-1/2	-	14.0	-	11.0	-	-
-	10	-	18.0	-	14.0	-	-
7.5	-	27	-	15.5	-	12.4	8.9
11	-	38.0	-	22.0	-	17.6	12.8
-	15	-	27.0	-	21.0	-	-
-	20	-	34.0	-	27.0	-	-
15	-	51	-	29	-	23	17
18.5	-	61	-	35	-	28	21
-	25	-	44	-	34	-	-
22	-	72	-	41	-	33	24
-	30	-	51	-	40	-	-
-	40	-	66	-	52	-	-
30	-	96	-	55	-	44	32
37	-	115	-	66	-	53	39
-	50	-	83	-	65	-	-
-	60	-	103	-	77	-	-
45	-	140	-	80	-	64	47
55	-	169	-	97	-	78	57
-	75	-	128	-	96	-	-
-	100	-	165	-	124	-	-
75	-	230	-	132	-	106	77
90	-	278	-	160	-	128	93

Electrical and Servicing Systems

Introduction to the electrical and servicing systems

Resistive type heating applications and incandescent lamps

For this type of load, is $\cos \varphi = 1$, then Ia is calculated as

- 3-phase case: $Ia = \frac{Pn}{\sqrt{3}\,U}$
- 1-phase case: $Ia = \frac{Pn}{U}$

Nominal power(kW)	Current demand (A)			
	1-phase 127 V	1-phase 230 V	3-phase 230 V	3-phase 400 V
0.1	0.79	0.43	0.25	0.14
0.2	1.58	0.87	0.50	0.29
0.5	3.94	2.17	1.26	0.72
1	7.9	4.35	2.51	1.44
1.5	11.8	6.52	3.77	2.17
2	15.8	8.7	5.02	2.89
2.5	19.7	10.9	6.28	3.61
3	23.6	13	7.53	4.33
3.5	27.6	15.2	8.72	5.05
4	31.5	17.4	10	5.77
4.5	35.4	19.6	11.3	6.5
5	39.4	21.7	12.6	7.22
6	47.2	26.1	15.1	8.66
7	55.1	30.4	17.6	10.1
8	63	34.8	20.1	11.5
9	71	39.1	22.6	13
10	79	43.5	25.1	14.4

Electrical and Servicing Systems

Introduction to the electrical and servicing systems

Fluorescent lamps

$$I_a = \frac{P_{ballast} + P_n}{U \cos \varphi}$$

Pballast is the power dissipated in the ballast

Arrangement of lamps, starters and ballasts	Tube power (W) [a]	Current (A) at 230 V			Tube length (cm)
		Magnetic ballast		Electronic ballast	
		Without PF correction capacitor	With PF correction capacitor		
Single tube	18	0.20	0.14	0.10	60
	36	0.33	0.23	0.18	120
	58	0.50	0.36	0.28	150
Twin tubes	2 x 18		0.28	0.18	60
	2 x 36		0.46	0.35	120
	2 x 58		0.72	0.52	150

- cos φ = 0.6 with no power factor (PF) correction[2] capacitor
- cos φ = 0.86 with PF correction[2] (single or twin tubes)
- cos φ = 0.96 for electronic ballast.

Compact fluorescent lamps

Type of lamp	Lamp power (W)	Current at 230 V (A)
Separated ballast lamp	10	0.080
	18	0.110
	26	0.150
Integrated ballast lamp	8	0.075
	11	0.095
	16	0.125
	21	0.170

Electrical and Servicing Systems

Introduction

Discharge lamps

Rely on the electrical discharge of light through a gas or vapour of a metallic compound, which is contained in a hermetically sealed transparent casing at a predetermined pressure. These lamps have a long start-up time, during which the current Ia is greater than the nominal. current In.

Type of lamp (W)	Power demand (W) at 230 V	Power demand (W) at 400 V	Current In(A) PF not corrected 230 V	Current In(A) PF not corrected 400 V	Current In(A) PF corrected 230 V	Current In(A) PF corrected 400 V	Starting x In	Starting Period (mins)	Luminous efficiency (lumens per watt)	Average timelife of lamp (h)	Utilization
High-pressure sodium vapour lamps											
50	60		0.76		0.3		1.4 to 1.6	4 to 6	80 to 120	9000	■ Lighting of large halls ■ Outdoor spaces ■ Public lighting
70	80		1		0.45						
100	115		1.2		0.65						
150	168		1.8		0.85						
250	274		3		1.4						
400	431		4.4		2.2						
1000	1055		10.45		4.9						
Low-pressure sodium vapour lamps											
26	34.5		0.45		0.17		1.1 to 1.3	7 to 15	100 to 200	8000 to 12000	■ Lighting of motorways ■ Security lighting, railway platforms ■ Platform, storage areas
36	46.5				0.22						
66	80.5				0.39						
91	105.5				0.49						
131	154				0.69						
Mercury vapour + metal halide (also called metal-iodide)											
70	80.5		1		0.40		1.7	3 to 5	70 to 90	6000	■ Lighting of very large areas by projectors (for example: sport stadiums, etc.)
150	172		1.80		0.88					6000	
250	276		2.10		1.35					6000	
400	425		3.40		2.15					6000	
1000	1046		8.25		5.30					6000	
2000	2092	2052	16.5	8.60	10.50	6				2000	
Mercury vapour + fluorescent substance (fluorescent bulb)											
50	57		0.6		0.30		1.7 to 2	3 to 6	40 to 60	8000 to 12000	■ Workshops with very high ceilings (halls,hangars) ■ Outdoor lighting ■ Low light output [a]
80	90		0.8		0.45						
125	141		1.15		0.70						
250	268		2.15		1.35						
400	421		3.25		2.15						
700	731		5.4		3.85						
1000	1046		8.25		5.30						
2000	2140	2080	15		11	6.1					

Electrical and Servicing Systems

Introductio

Led lamps

- Powered by an electronic driver
- Very short start-up time
- Inrush current is higher than for fluorescent lamp with ballast

Power demand (W) at 230 V	Power factor	Starting			Luminous efficiency (lumens/watt)	Average timelife (h)	Utilization
		Inrush current Ip/In	Inrush current time	Full Time to start			
3 to 400 W	> 0.9	Up to 250	< 250 µs	< 0.5 to 1 sec	100 to 140	20000 to 50000	■ All lighting applications in all domains (housing, commercial andindustrial building, infrastructure)

Electrical and Servicing Systems

Introduction to the electrical and servicing systems

Evaluation of the estimated power in an electrical installation

This assessment is of critical importance, aimed at carefully identifying the electrical loads that are to be installed and their combined use on a daily basis.

An electrical installation must be designed based on minimum cost criteria.

On the other hand, the physical safety of people and installations must not be compromised by aggressive economic criteria.

Electrical and Servicing Systems

Introduction to the electrical and servicing systems

Evaluation of the estimated power in an electrical installation

Some concepts:

- Installed power

It corresponds to the sum of the powers consumed at full load by all the equipment in the same installation.

- Power used

This is the electrical power that will be needed to guarantee the operation of the various pieces of equipment in the installations, considering the common scenarios in which they are used.

Power used < Installed power

Actual power consumption is not yet known → load estimation (kW) → Power used (kVA) →

$$I = \frac{kVA \times 10^3}{U\sqrt{3}}$$

Phase to phase voltage

Electrical and Servicing Systems

Introduction

Evaluation of the estimated power in an electrical installation

All individual loads are not necessary being used at full rated power nor simultaneously at the same time. Therefore, when calculating the estimated power of an electrical installation, the following factors can be considered:

- Factor of maximum utilization (Ku)
- Coincidence factor (Ks)
- Expansion factor (Ke)

Electrical and Servicing Systems

Introduction

Factor of maximum utilization (Ku)

It establishes the operating regime of an electrical load, reflecting the relationship between the power consumed and the stipulated power specified on the equipment's nameplate.

Type of use/type of receivers	Ku
Lighting	1
Heating	1
Power sockets	Variable depending on use
Motors	0.3 to 0.75
Other types of use/receivers	1

Electrical and Servicing Systems

Introduction

Factor of maximum utilization (Ku)

Lighting in the classroom example

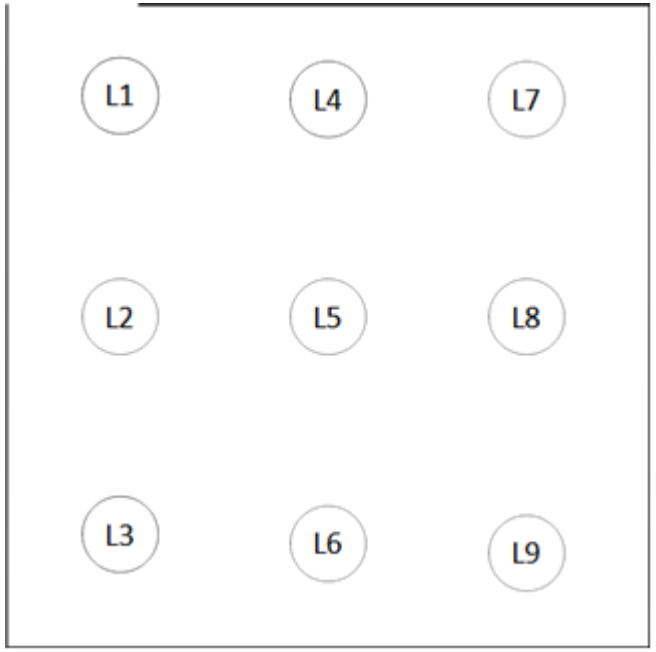

All lamps consume the same rated power.

So for each lamp set Ku=1.

Electrical and Servicing Systems

Introduction

Factor of maximum utilization (Ku)

Machine workshop example

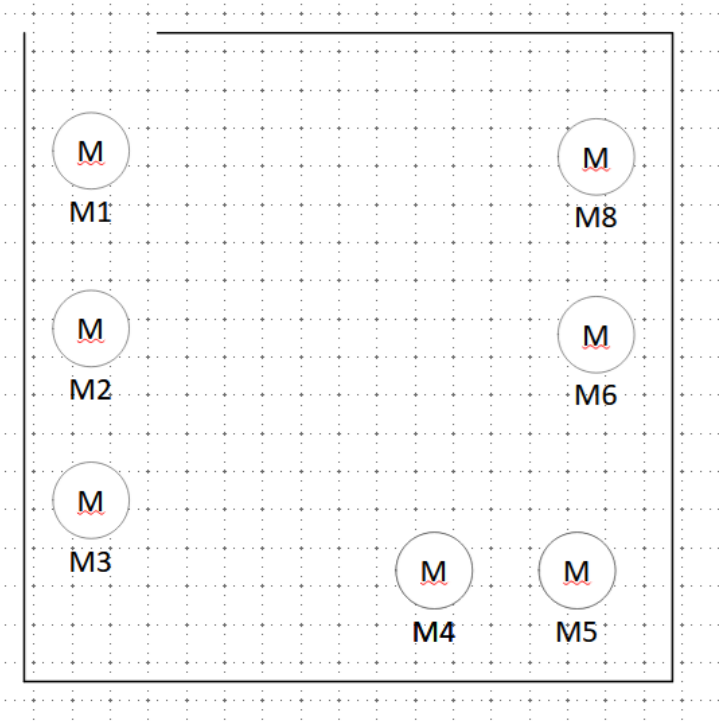

Motor		Type of operation	Ku	Pused
M1	11 kW	Moderated loaded	0.5	5.5 kW
M2	22 kW	Moderated loaded	0.5	11 kW
M3	7.5 kW	Light loaded	0.3	7.5 kW
M4	7.5 kW	Light loaded	0.3	2.25 kW
M5	30 kW	Moderate/high loaded	0.6	18 kW
M6	45 kW	Heavy loaded	0.7	31.5 kW
M7	30 kW	Heavy loaded	0.7	21 kW
M8	18.5 kW	Moderated loaded	0.5	9.25 kW
Sum	171.5 kW		Sum	106 kW

Total current to by supplied:

$$I = \frac{106 * 10^3}{\sqrt{3} * 400 * \cos \emptyset}$$

$\cos \emptyset = 0.6 \rightarrow 254.9\ A$

$\cos \emptyset = 0.65 \rightarrow 235.38\ A$

$\cos \emptyset = 0.7 \rightarrow 218.56\ A$

Electrical and Servicing Systems

Introduction

Factor of maximum utilization (Ku)

Load movement example

Which Ku factor to choose for the motors?

Scenario A

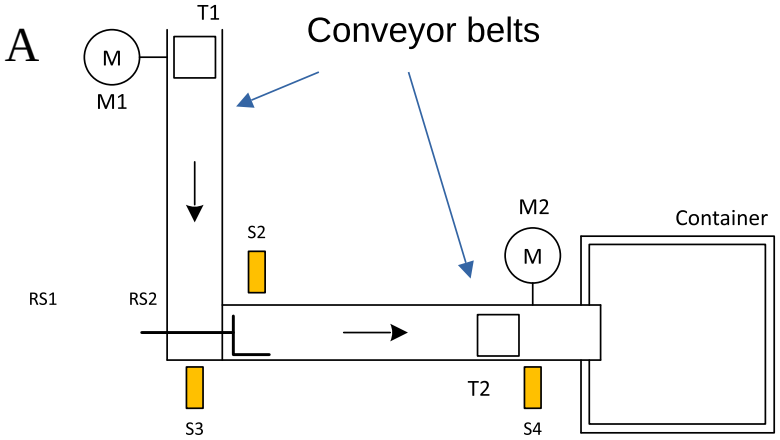

- Low speed and heavy load

Scenario B

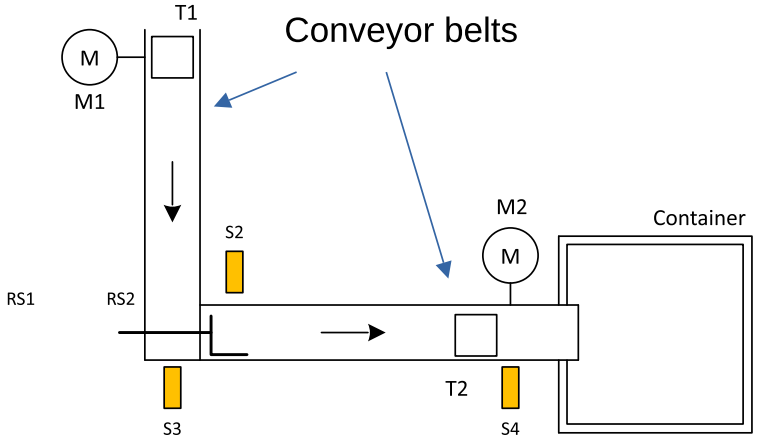

- High speed and heavy load

Electrical and Servicing Systems

Introduction

Diversity factor (Ks)

This factor characterizes the operating regime of an electrical installation or part of it, reflecting the relationship between the sum of the stipulated powers of the equipment likely to operate simultaneously and the sum of the installed powers of all the equipment fed by the same circuit or the same installation.

Electrical and Servicing Systems

Introduction

Diversity factor (Ks)

Applied to collective residential installations

Number of users/ Number of residential flats	Ks
2 to 4	1,00
5 to 9	0,75
10 to 14	0,56
15 to 19	0,48
20 to 24	0,43
25 to 29	0,40
30 to 34	0,38
35 to 39	0,37
40 to 49	0,36
≥50	0,34

Electrical and Servicing Systems

Introduction

Diversity factor (Ks)

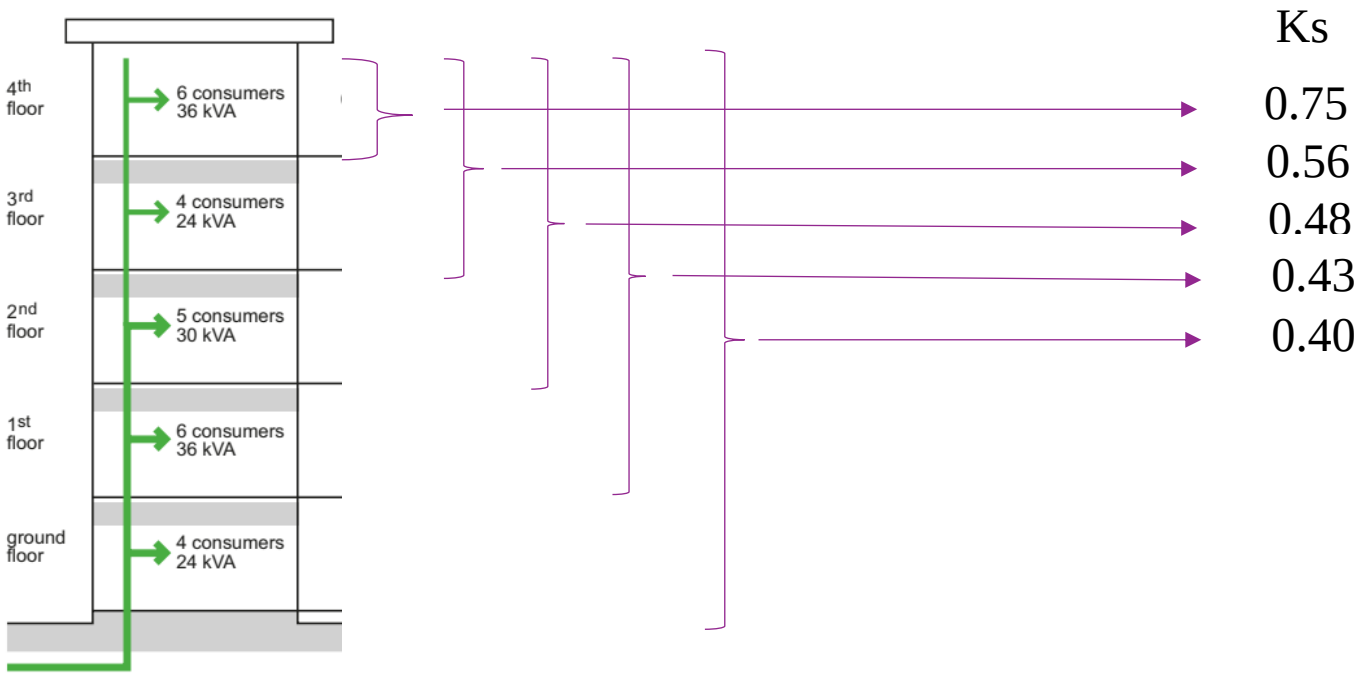

Block of residential flats

Electrical and Servicing Systems

Introduction

Coincidence factor (Ks)

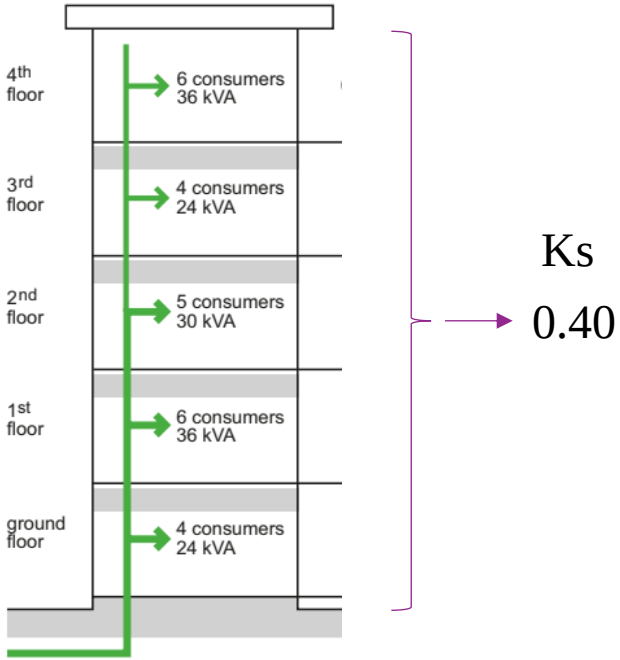

Block of residential flats

For a residential block of 25 consumers:

Total installed load = 159 kVA

Apparent power supply for the building = 64 kVA

Current entering in the main rising at ground level is given by:

$$I = \frac{150 * 0.4 * 10^3}{\sqrt{3} * 400} = 87\ A$$

For vertical rising mains fed at ground level, the cross-sectional area of the conductors is progressively reduced from the lower floors towards the upper floors.

Main conductor cross-section reduction is conventionally spaced by at least 3-floor intervals.

The current entering the third floor is: $I = \frac{60 * 0.56 * 10^3}{\sqrt{3} * 400} = 45\ \mathrm{A}$

Electrical and Servicing Systems

Introduction

Diversity factor (Ks)

What are switchboards (electric panels)?

Switchboards are used to safely distribute electricity throughout commercial and industrial facilities. A switchboard is a component of an electrical installation which are designed to protect, command or control the loads that make up the downstream electrical circuit.

Electrical and Servicing Systems

Introduction

Diversity factor (Ks)

Range of simultaneity factors according to standard CEI 60439:1999.

Number of circuits	Ks
2 to 3	0.9
4 to 5	0,8
6 to 9	0,7
≥ 10	0,6

Range of simultaneity factors according to standard IEC 61439-2:2022.

Type of load	Assumed loading factor
Distribution - 2 and 3 circuits	0.9
Distribution - 4 and 5 circuits	0.8
Distribution - 6 to 9 circuits	0.7
Distribution - 10 or more circuits	0.6
Electric actuator	0.2
Motors ≤ 100 kW	0.8
Motors > 100 kW	1.0

Electrical and Servicing Systems

Introduction

Diversity factor (Ks)

Switchboards

Allow to divide an electric power feed into load circuits base in their functionality or physical proximity.

The current required by the loads fed by the switchboard is usually lower than the installed kVA power.

As such, the application of a simultaneity factor Ks to each switchboard is recommended, so that the section of the power cable is dimensioned considering the actual power in transit.

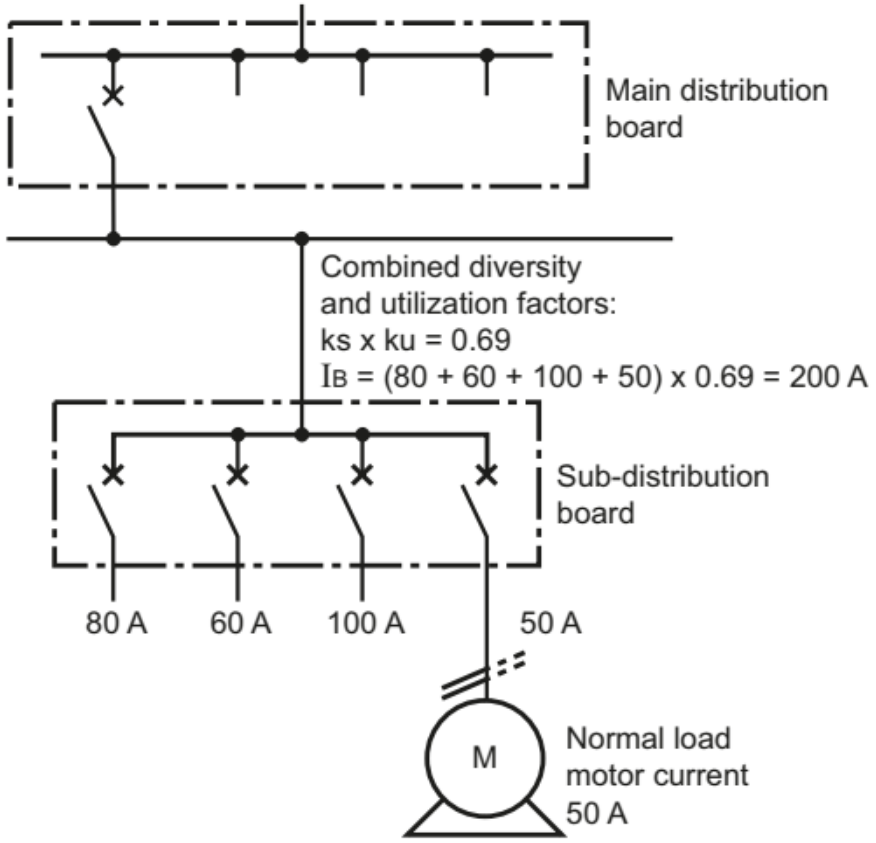

Electrical and Servicing Systems

Introduction

Diversity factor (Ks)

Applied to electric circuits (NF C 15 100)

N - number of electrical outlets per circuit

Tipe of use	Ks
Lighting	1,00
Air conditioner	1
Electric heating	1
Power sockets	0.1+0.9/N
Kitchen appliances	0.7
Lifts and goods lifts	
High power motor	1
For the second most power motor	0.75
Other motors	0.6

Electrical and Servicing Systems

Introduction

Diversity factor (Ks)

Ceiling lighting with three sets of independent luminaires example

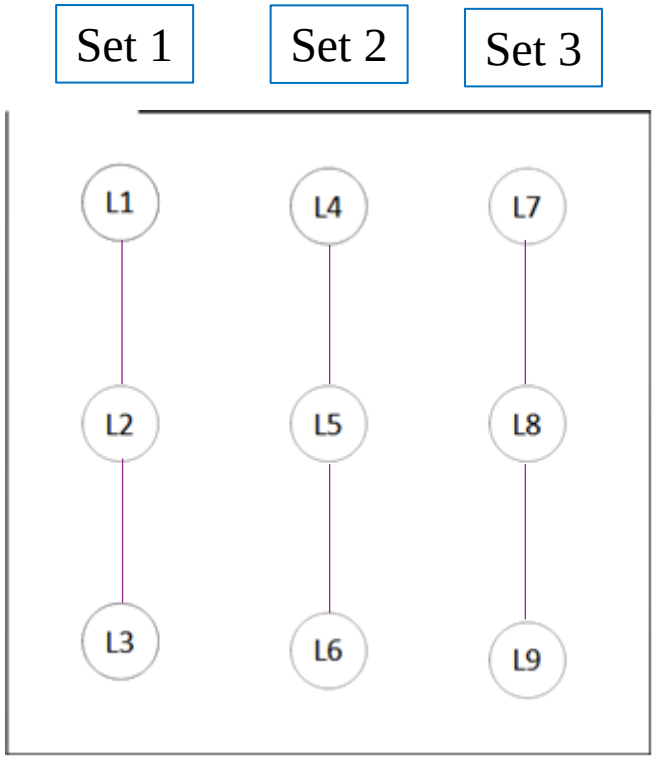

Consider that we have three set of independent lights in a factory hall.

Only set 3 is always on, while the other two lighting sets are not used at the same time.

Does it make sense to consider a unitary Ks?

Electrical and Servicing Systems

Introduction

Coincidence factor (Ks)

Returning to our workshop example…

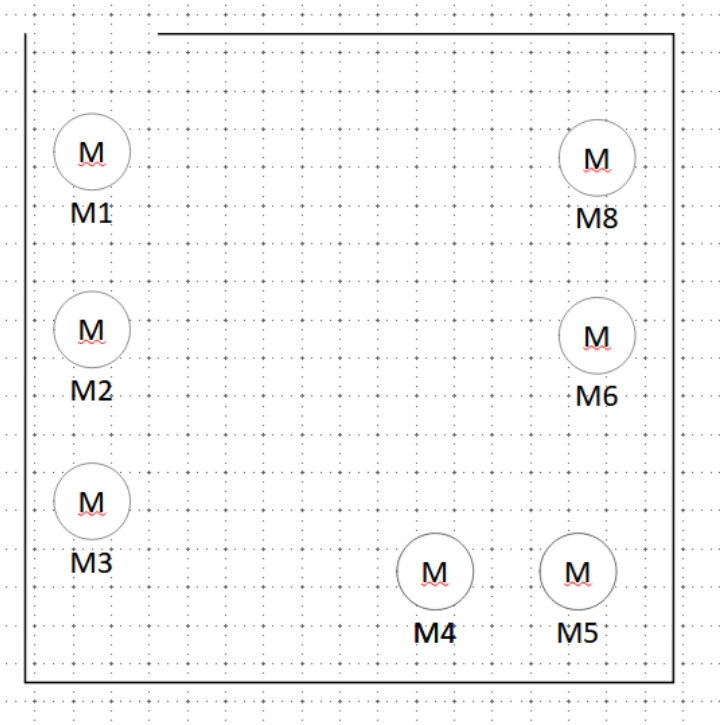

It is unlikely that all the electric motors will be in use at the same time.

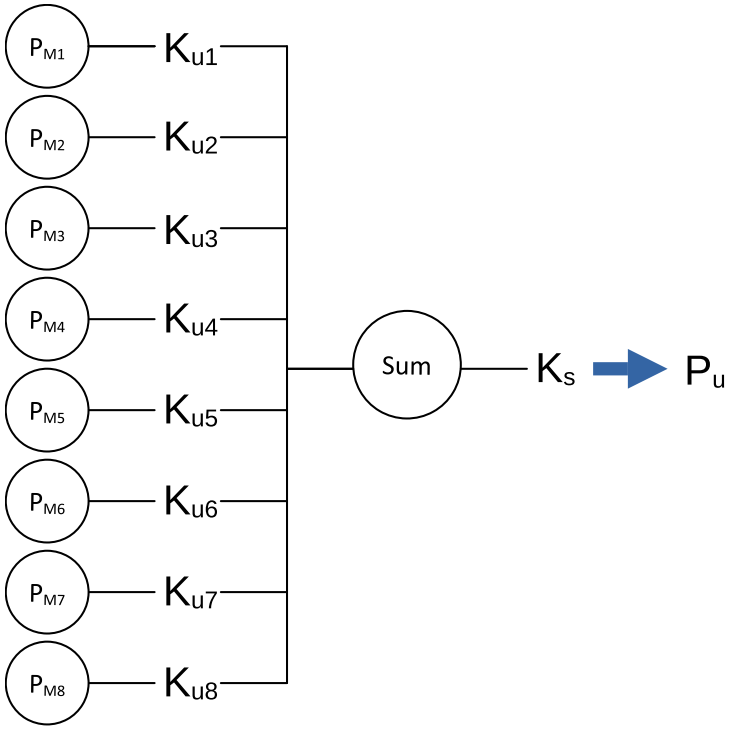

Electrical and Servicing Systems

Introduction

Example

A small industrial facility comprises three main areas:

- Workshop A
- Workshop B
- Workshop C

Utilization			Apparent power (Pa) kVa
Workshop A	Lathe	no. 1	5
		no. 2	5
		no. 3	5
		no. 4	5
	Pedestal-drill	no. 1	2
		no. 2	2
	5 socket-outlets 10/16 A		18
	30 fluorescent lamps		3
Workshop B	Compressor		15
	3 socket-outlets 10/16 A		10.6
	10 fluorescent lamps		1
Workshop C	Ventilation	no. 1	2.5
		no. 2	2.5
	Oven	no. 1	15
		no. 2	15
	5 socket-outlets 10/16 A		18
	20 fluorescent lamps		2

STEP 1
Define Ku for each load.

Electrical and Servicing Systems

Introduction

Example

Utilization			Apparent power (Pa) kVa	Utilization factor max.	Apparent power demand max. kVA
Workshop A	Lathe	no. 1	5	0.8	4
		no. 2	5	0.8	4
		no. 3	5	0.8	4
		no. 4	5	0.8	4
	Pedestal - drill	no. 1	2	0.8	1.6
		no. 2	2	0.8	1.6
	5 socket-outlets 10/16 A		18	1	18
	30 fluorescent lamps		3	1	3
Workshop B	Compressor		15	0.8	12
	3 socket-outlets 10/16 A		10.6	1	10.6
	10 fluorescent lamps		1	1	1
Workshop C	Ventilation	no. 1	2.5	1	2.5
		no. 2	2.5	1	2.5
	Oven	no. 1	15	1	15
		no. 2	15	1	15
	5 socket-outlets 10/16 A		18	1	18
	20 fluorescent lamps		2	1	2

STEP 2
Group the load circuits and define the Ks for each switchboard.

Electrical and Servicing Systems

Introduction

Example

Utilization			Apparent power (Pa) kVa	Utilization factor max.	Apparent power demand max. kVA	Level 1 Diversity factor	Level 1 Apparent power demand kVA	
Workshop A	Lathe	no. 1	5	0.8	4	Distribution box 0.75	14.4	Power circuit
		no. 2	5	0.8	4			
		no. 3	5	0.8	4			
		no. 4	5	0.8	4			
	Pedestal - drill	no. 1	2	0.8	1.6			
		no. 2	2	0.8	1.6			
	5 socket-outlets 10/16 A		18	1	18	0.2	3.6	Socket-oulets
	30 fluorescent lamps		3	1	3	1	3	Lighting circuit
Workshop B	Compressor		15	0.8	12	1	12	Power circuit
	3 socket-outlets 10/16 A		10.6	1	10.6	0.4	4.3	Socket-oulets
	10 fluorescent lamps		1	1	1	1	1	Lighting circuit
Workshop C	Ventilation	no. 1	2.5	1	2.5	Distribution box 1	35	Powver circuit
		no. 2	2.5	1	2.5			
	Oven	no. 1	15	1	15			
		no. 2	15	1	15			
	5 socket-outlets 10/16 A		18	1	18	0.28	5	Socket-oulets
	20 fluorescent lamps		2	1	2	1	2	Lighting circuit

STEP 3
Feed the switchboards in each workshop from a main switchboard (distribution box) and set the respective Ks.

Electrical and Servicing Systems

Introduction to the electrical and servicing systems

Example

Utilization			Apparent power (Pa) kVa	Utilization factor max.	Apparent power demand max. kVA	Level 1 Diversity factor	Level 1 Apparent power demand kVA		Level 2 Diversity factor	Level 2 Apparent power demand kVA
Workshop A	Lathe	no. 1	5	0.8	4	Distribution box 0.75	14.4	Power circuit	Workshop A distribution box 0.9	18.9
		no. 2	5	0.8	4					
		no. 3	5	0.8	4					
		no. 4	5	0.8	4					
	Pedestal - drill	no. 1	2	0.8	1.6					
		no. 2	2	0.8	1.6					
	5 socket-outlets 10/16 A		18	1	18	0.2	3.6	Socket-oulets		
	30 fluorescent lamps		3	1	3	1	3	Lighting circuit		
Workshop B	Compressor		15	0.8	12	1	12	Power circuit	Workshop B distribution box 0.9	15.6
	3 socket-outlets 10/16 A		10.6	1	10.6	0.4	4.3	Socket-oulets		
	10 fluorescent lamps		1	1	1	1	1	Lighting circuit		
Workshop C	Ventilatio n	no. 1	2.5	1	2.5	Distribution box 1	35	Powver circuit	Workshop C distribution box 0.9	37.8
		no. 2	2.5	1	2.5					
	Oven	no. 1	15	1	15					
		no. 2	15	1	15					
	5 socket-outlets 10/16 A		18	1	18	0.28	5	Socket-oulets		
	20 fluorescent lamps		2	1	2	1	2	Lighting circuit		

STEP 4
Finally, feed the main switchboards (distribution box) in each workshop from a general switchboard in the factory and define the respective Ks.

Electrical and Servicing Systems

Introduction

Example

Utilization			Apparent power (Pa) kVa	Utilization factor max.	Apparent power demand max. kVA	Level 1 Diversity factor	Level 1 Apparent power demand kVA	Level 2 Diversity factor	Level 2 Apparent power demand kVA	Level 3 Diversity factor	Level 3 Apparent power demand kVA
Workshop A	Lathe	no. 1	5	0.8	4	Distribution box 0.75	14.4 Power circuit	Workshop A distribution box 0.9	18.9	Main general distribution board MGDB 0.9	65 LV / MV
		no. 2	5	0.8	4						
		no. 3	5	0.8	4						
		no. 4	5	0.8	4						
	Pedestal-drill	no. 1	2	0.8	1.6						
		no. 2	2	0.8	1.6						
	5 socket-outlets 10/16 A		18	1	18	0.2	3.6 Socket-oulets				
	30 fluorescent lamps		3	1	3	1	3 Lighting circuit				
Workshop B	Compressor		15	0.8	12	1	12 Power circuit	Workshop B distribution box 0.9	15.6		
	3 socket-outlets 10/16 A		10.6	1	10.6	0.4	4.3 Socket-oulets				
	10 fluorescent lamps		1	1	1	1	1 Lighting circuit				
Workshop C	Ventilation	no. 1	2.5	1	2.5	Distribution box 1	35 Powver circuit	Workshop C distribution box 0.9	37.8		
		no. 2	2.5	1	2.5						
	Oven	no. 1	15	1	15						
		no. 2	15	1	15						
	5 socket-outlets 10/16 A		18	1	18	0.28	5 Socket-oulets				
	20 fluorescent lamps		2	1	2	1	2 Lighting circuit				

Once the real power kVA has been calculated for each switchboard, the respective nominal current In can be computed.

$$I = \frac{kVA \times 10^3}{U\sqrt{3}}$$