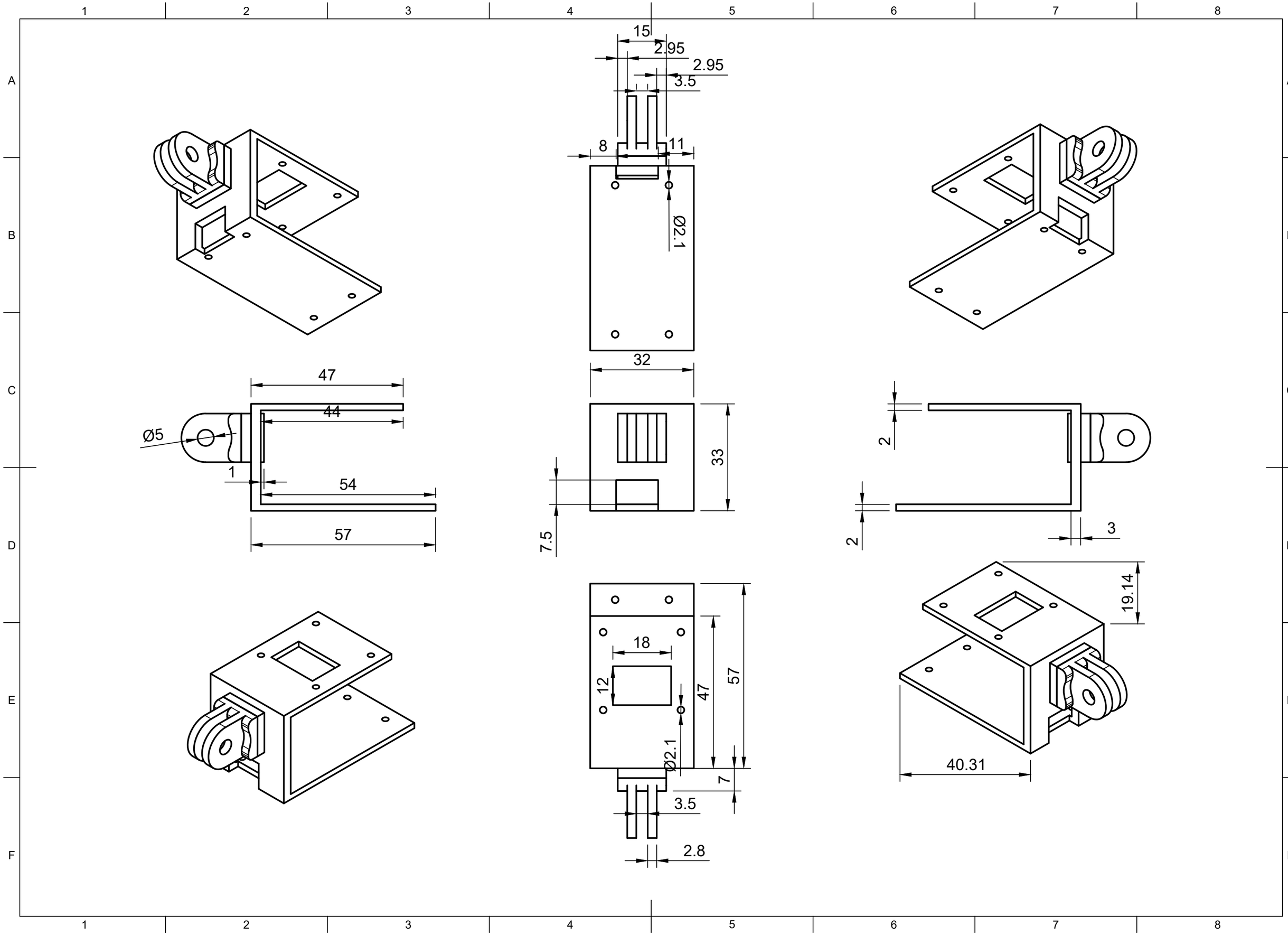
15
2.95
2.95
3.5
8
11
Ø2.1
32
47
44
Ø5
1
54
57
33
7.5
2
2
3
19.14
18
12
47
57
Ø2.1
7
3.5
2.8
40.31