REVISIONS		
REV	DESCRIPTION	DATE
1	INITIAL	9/9/25
2	ADDED GD&T	9/10/25
3	FIX O-RING GROOVE	9/14/25

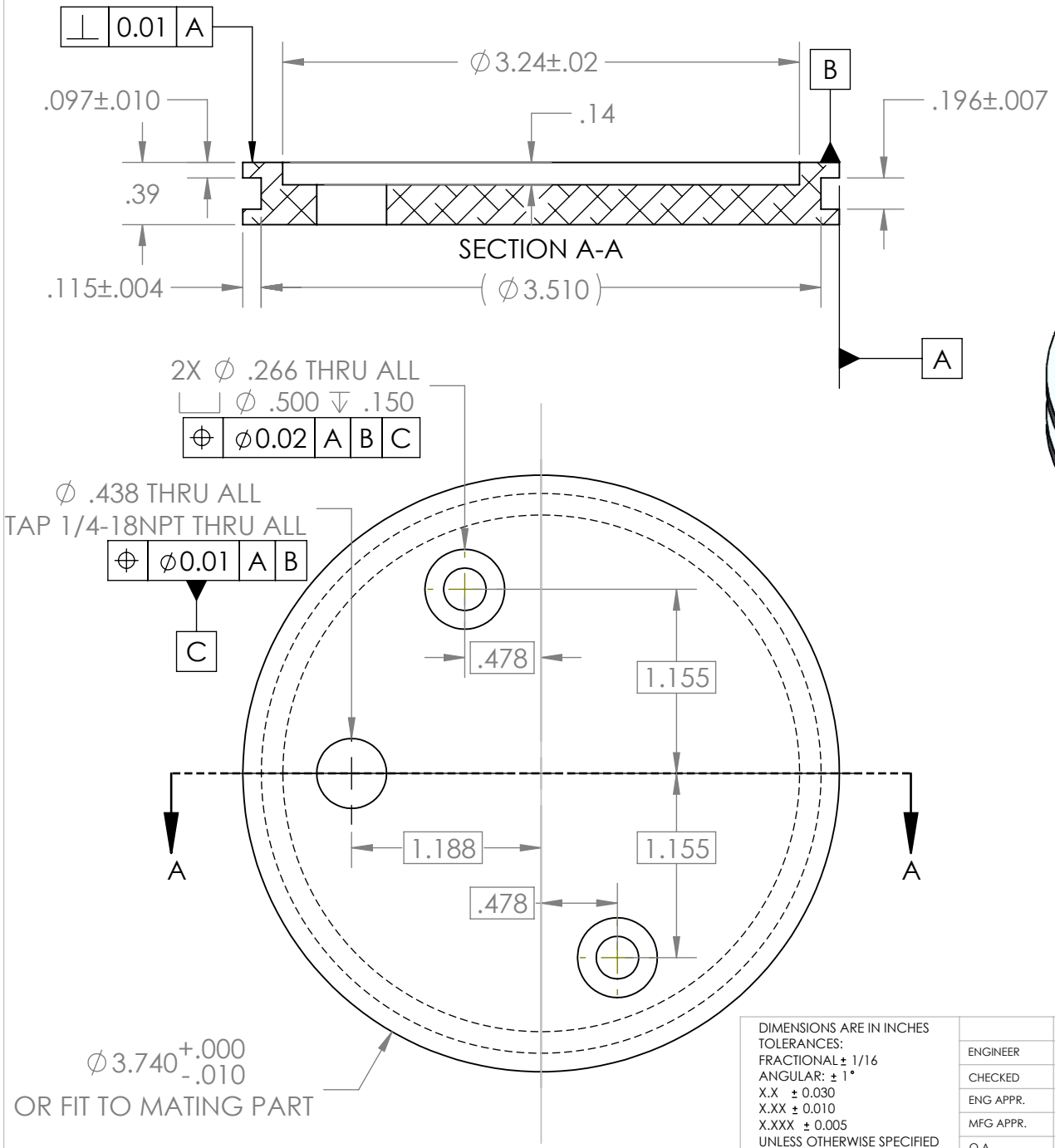

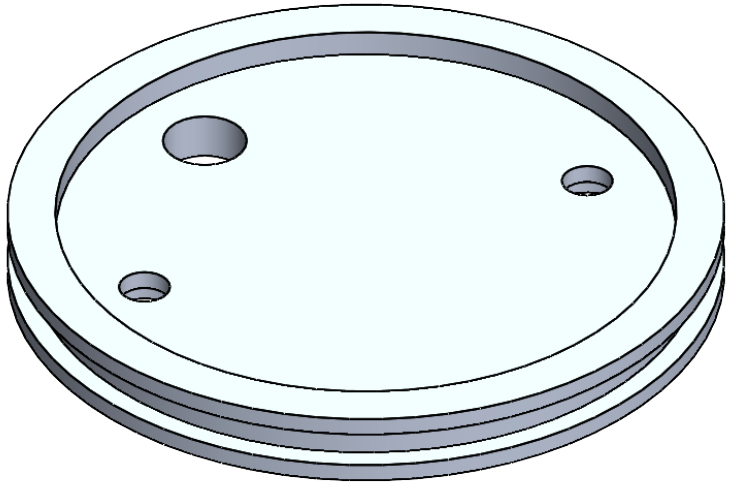

FOR REFERENCE ONLY

DIMENSIONS ARE IN INCHES
TOLERANCES:
FRACTIONAL ± 1/16
ANGULAR: ± 1°
X.X ± 0.030
X.XX ± 0.010
X.XXX ± 0.005
UNLESS OTHERWISE SPECIFIED

MATERIAL: ALUMINUM 6061-T6

FINISH: MACHINED

QUANTITY: 1

	NAME	DATE
ENGINEER	WILLIAM ARMSTRONG	9/9/25
CHECKED		
ENG APPR.		
MFG APPR.		
Q.A.		

COMMENTS:
H DRILL IS 0.2660; 7/16 IS 0.4375.
COUNTERBORES ARE OPTIONAL

MECHANICAL ENGINEERING
COLORADO SCHOOL OF MINES

PART NAME:
TANK BULKHEAD, FUEL

DESC:
TANK BULKHEAD, FUEL, MOJAVE SPHINX

SIZE	PART NO.	REV.
A	BKHD-FL-0238-4NPT-2X250C	3

SCALE: 1:1 | FILE : BKHD-FL-O238-4NPT-2X250C TANK BULKHEAD FUEL MOJAVE SPHINX | SHEET 1 OF 1

SOLIDWORKS Educational Product. For Instructional Use Only.