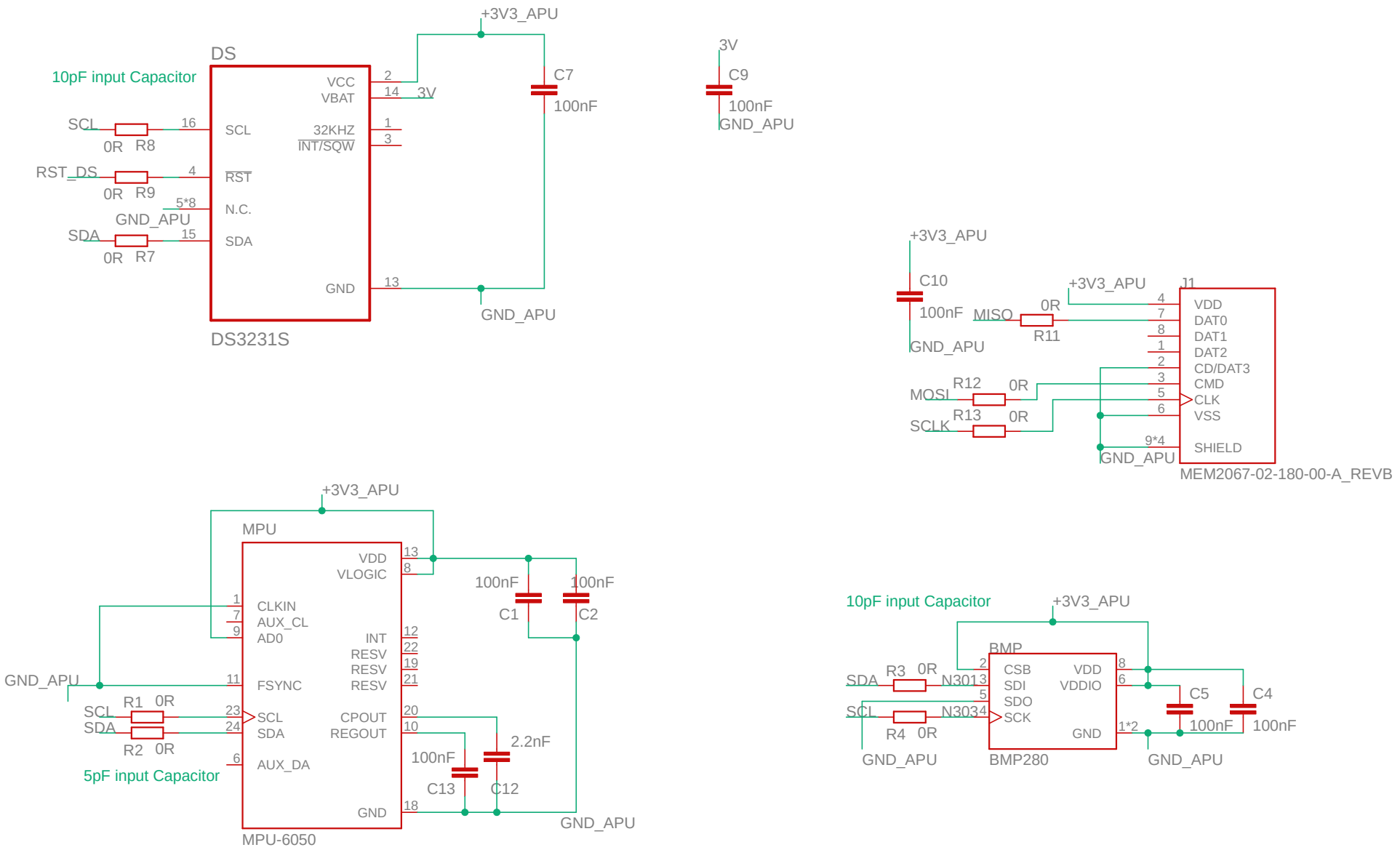

APU

10/3/2021 3:15 PM

Sheet: 1/3

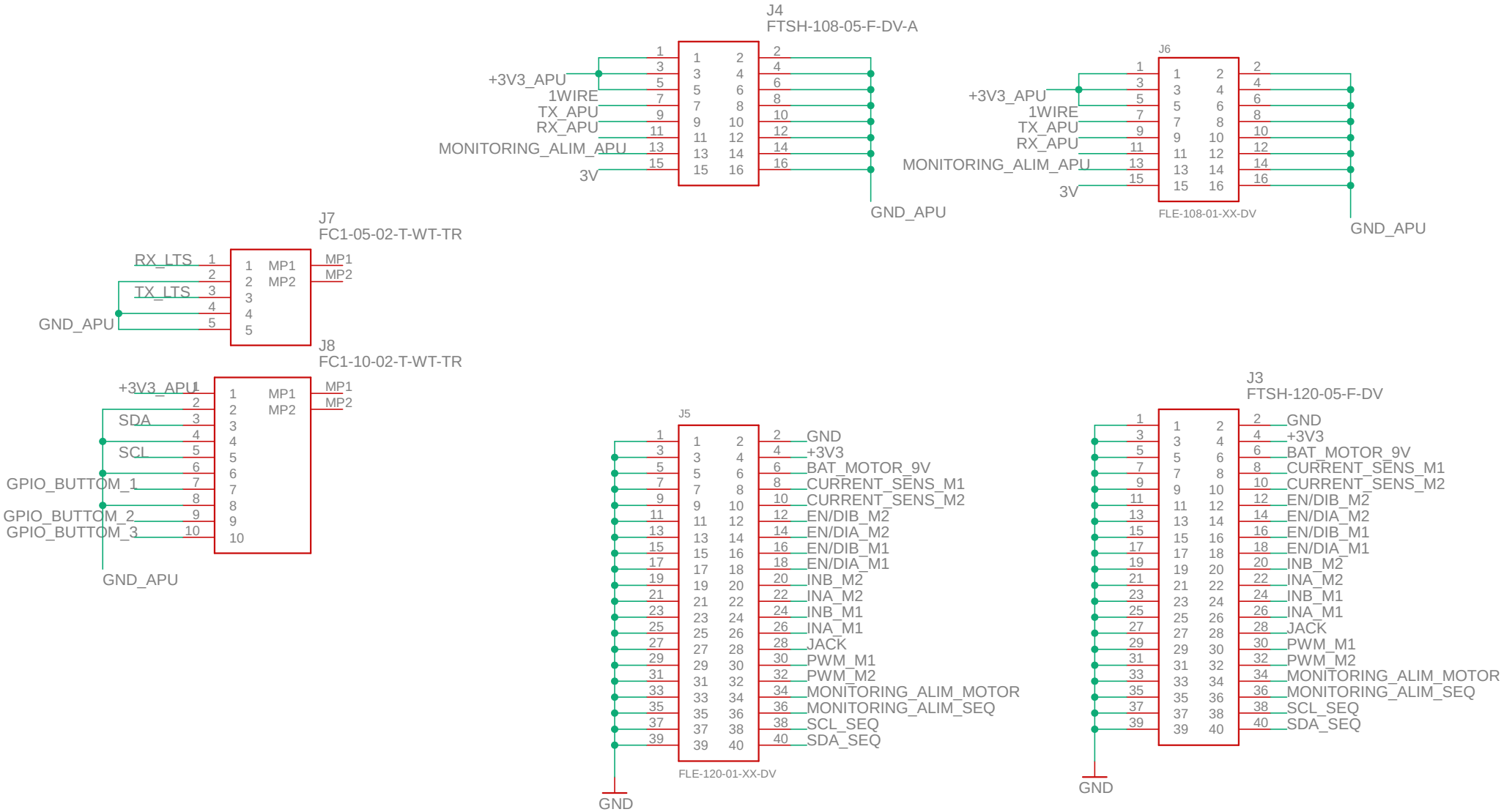

APU

10/3/2021 3:15 PM

Sheet: 2/3

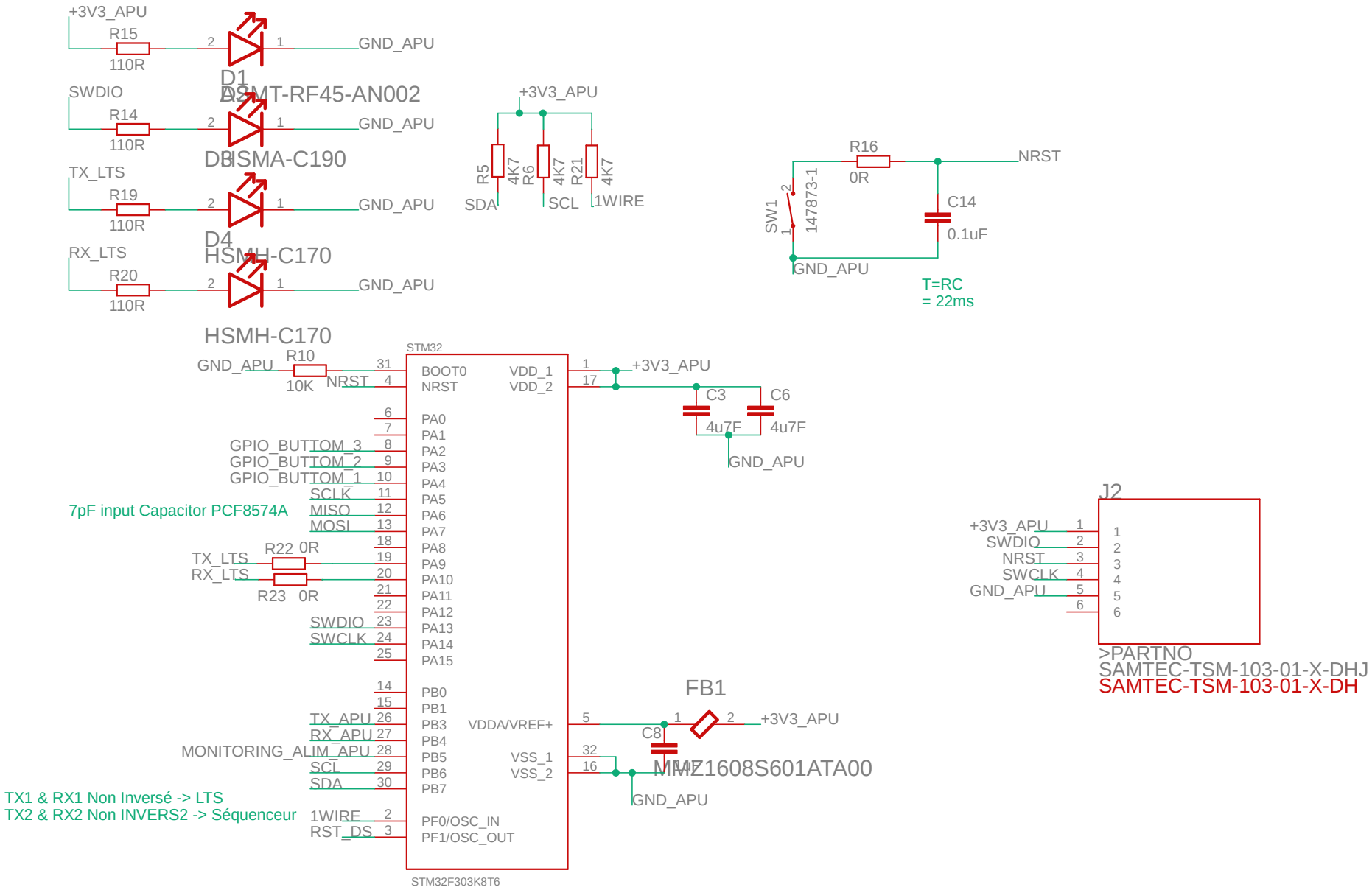

APU

10/3/2021 3:15 PM

Sheet: 3/3