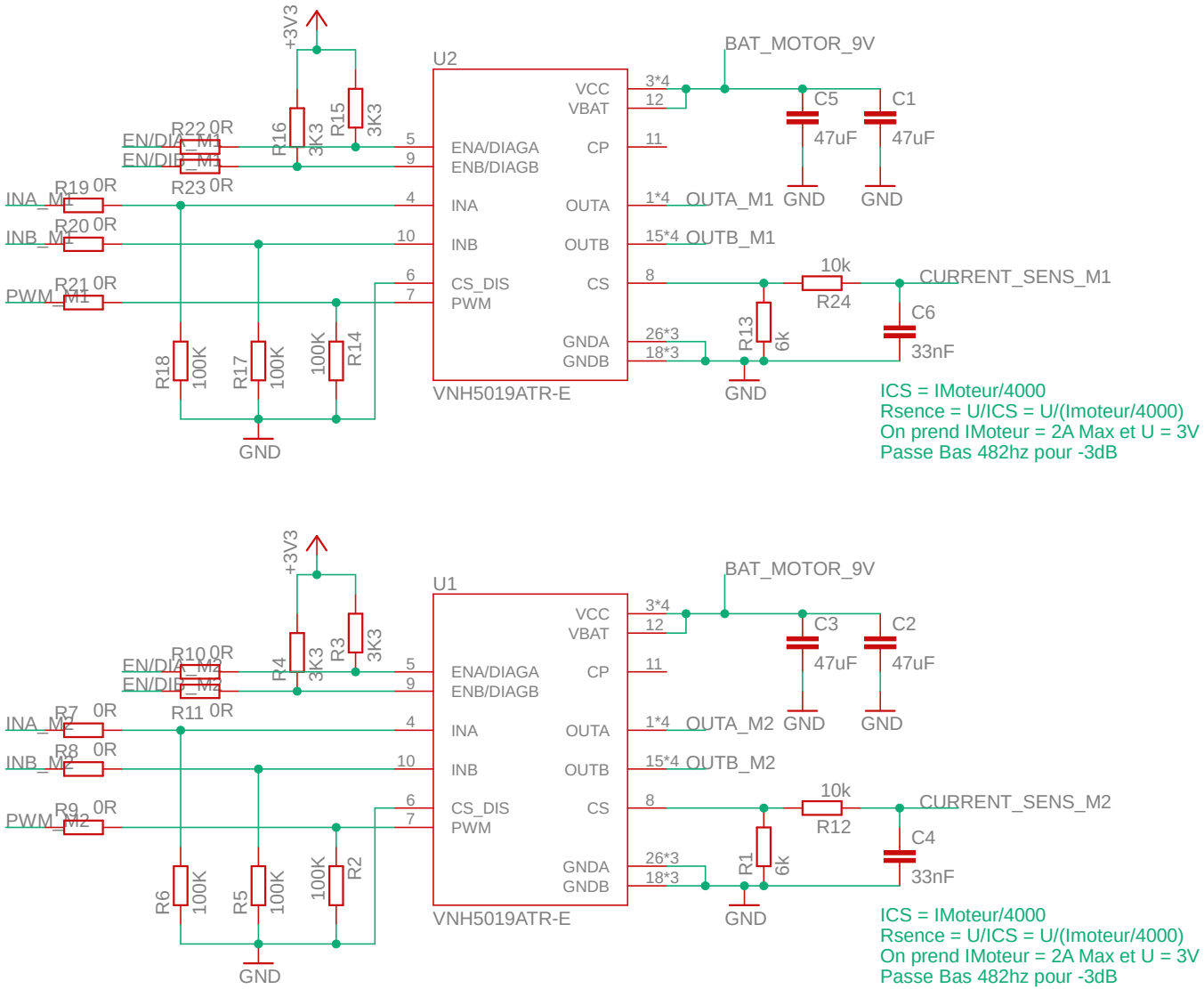

motor

2/16/2021 7:50 PM

Sheet: 1/2

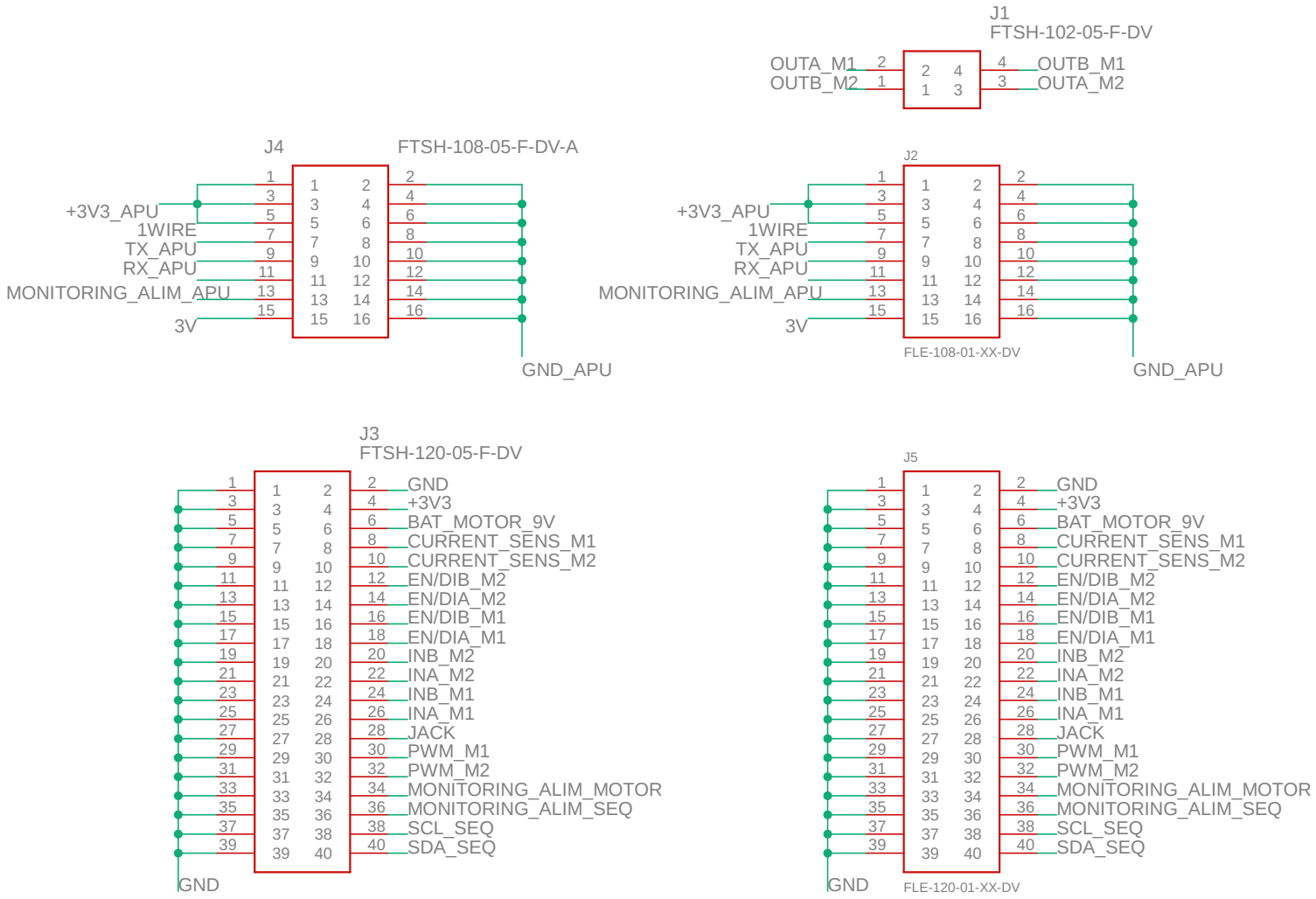

motor

2/16/2021 7:50 PM

Sheet: 2/2