Transmitter

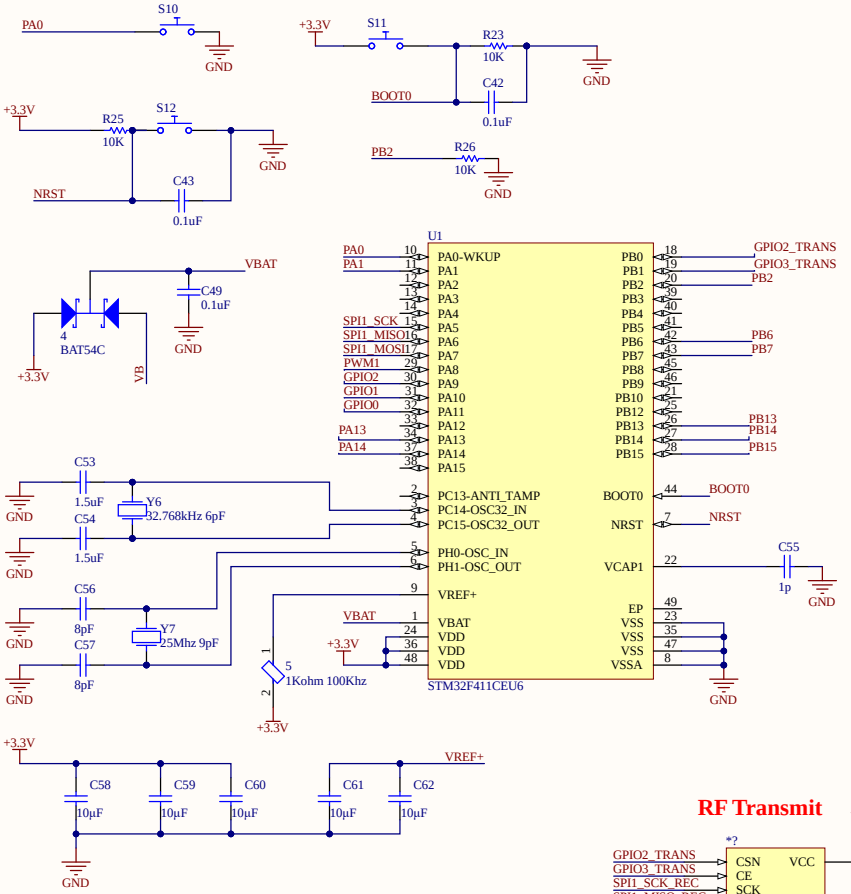

Power supply

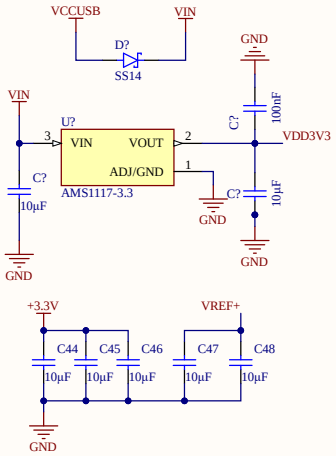

Programming Interface

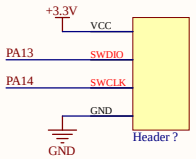

Receiver

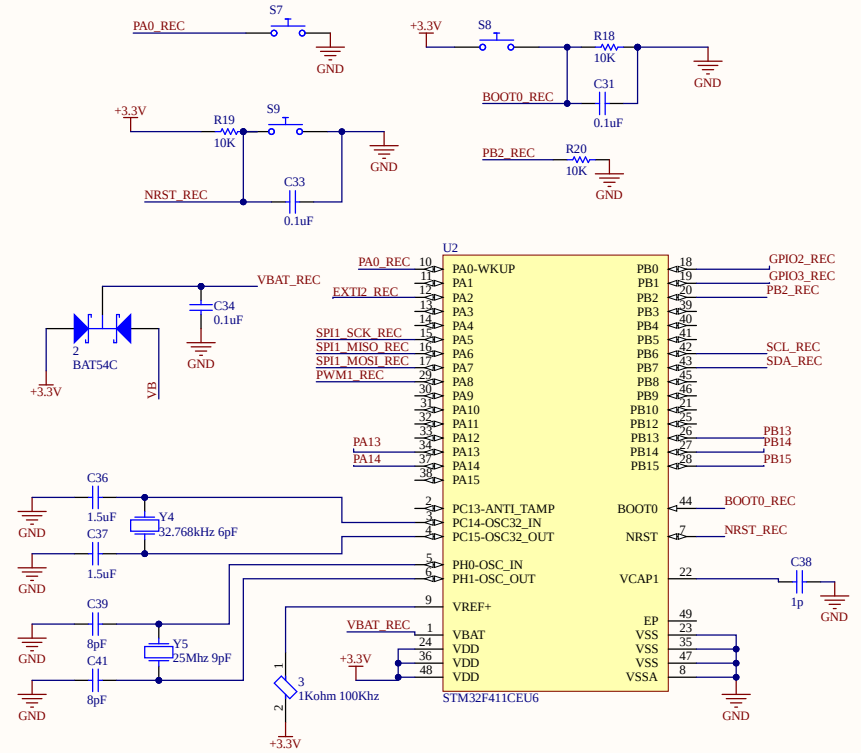

RF Transmit

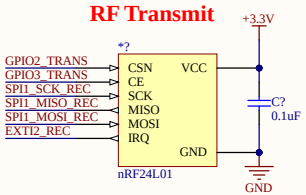

RF Receiver

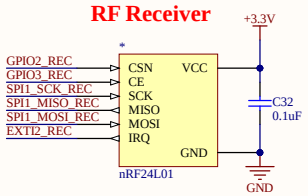

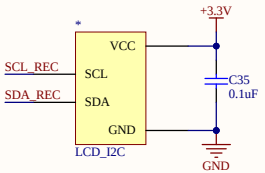

FUNCTION MODES

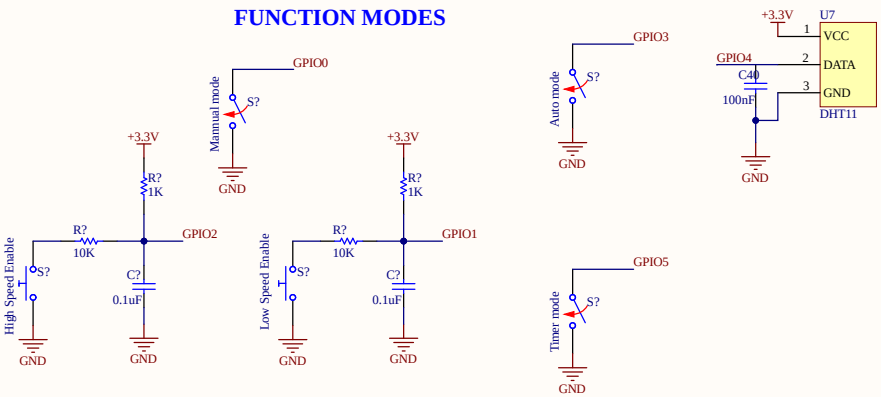

OUTPUT

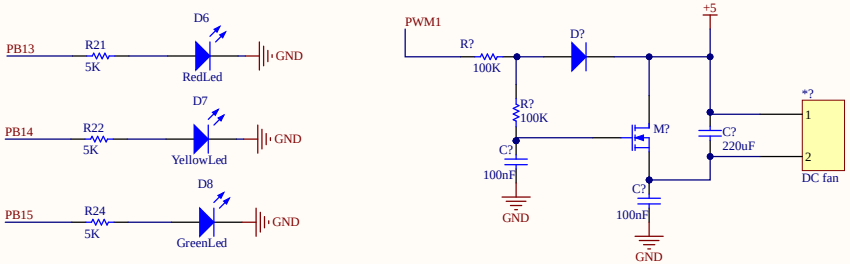

Title		
Size A3	Number	Revision
Date: 3/09/2026	Sheet of	
File: D:\TuongMinh\..\Schmatic_v2.SchDoc	Drawn By:	