Power supply

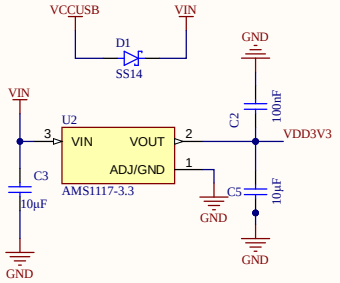

Function Modes

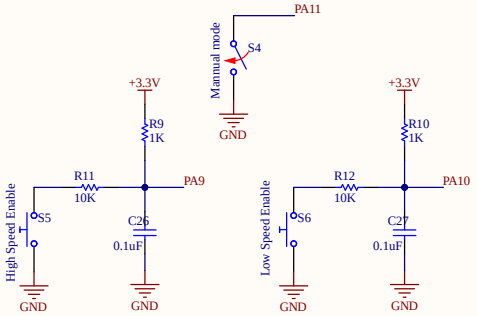

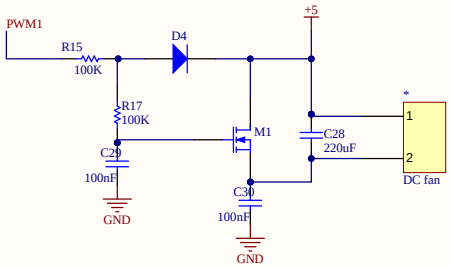

MCU

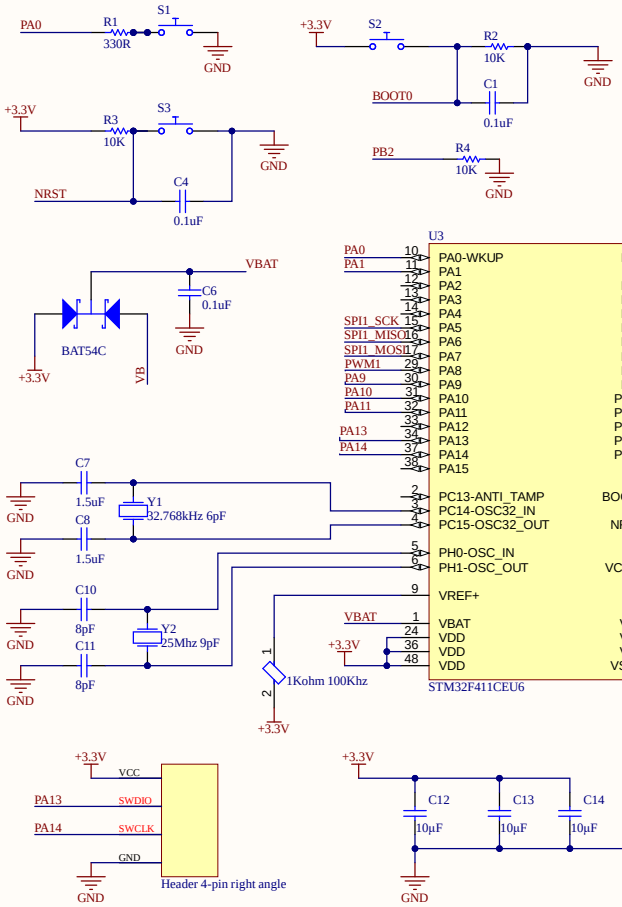

Peripherals

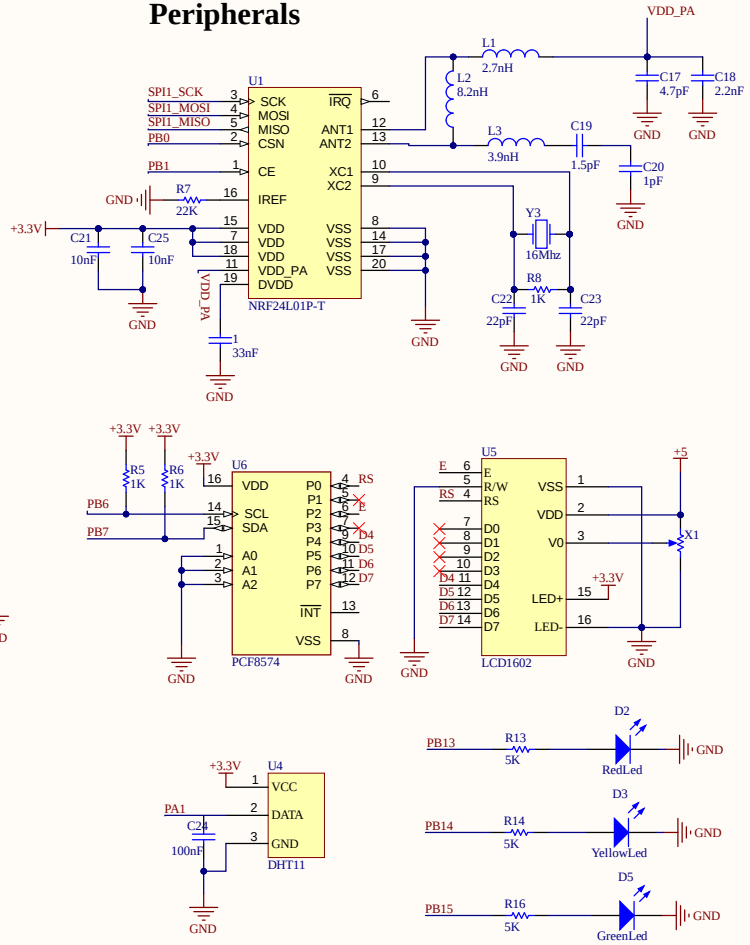

RF Remote Controlling Fan With 3-mode Operation	Course: **Embedded System Design**		
	Instructor: **MSc. Bui Quoc Bao**		
	Group: **04**		
Size A3	FCSM No.	DWG No.	Rev
Scale		Sheet	

Board Stack Report