ResearchGate

See discussions, stats, and author profiles for this publication at: https://www.researchgate.net/publication/340379630

FEEDI – A Smart Wearable Foot-Band for Navigation and Guidance Using Haptic Feedback

Chapter *in* Advances in Intelligent Systems and Computing · April 2020

DOI: 10.1007/978-3-030-44267-5_52

CITATIONS
2

READS
600

6 authors, including:

Simon Claus Stock
Rosenheim Technical University of Applied Sciences
26 PUBLICATIONS **113** CITATIONS

SEE PROFILE

Alain Bertemes
Karlsruhe Institute of Technology
1 PUBLICATION **2** CITATIONS

SEE PROFILE

Marco Stang
Karlsruhe Institute of Technology
19 PUBLICATIONS **80** CITATIONS

SEE PROFILE

Martin Sommer
Karlsruhe Institute of Technology
23 PUBLICATIONS **45** CITATIONS

SEE PROFILE

All content following this page was uploaded by Simon Claus Stock on 06 April 2020.

The user has requested enhancement of the downloaded file.

FEEDI - A Smart Wearable Foot-Band for Navigation and Guidance Using Haptic Feedback

Simon Stock(✉), Alain Bertemes(✉), Marco Stang, Martin Böhme, Daniel Grimm, and Wilhelm Stork

Karlsruhe Institute of Technology, Institute for Information Processing Technologies (ITIV), Engesserstraße 5, 76131 Karlsruhe, Germany
{simon.stock, marco.stang, martin.boehme, daniel.grimm, wilhelm.stork}@kit.edu, alain.bertemes@student.kit.edu

Abstract. In this paper, we introduce the design and implementation of a smart foot bracelet for navigation purposes. The foot-band is meant to be worn right above the ankle. FEEDI, as the wearable shall be called, guides pedestrians to their destination by giving them haptic feedback using four vibration motors.

That way, the user's attention is freed from any display and audio feedback, making him perceive more of his surroundings. Furthermore, the wearable could have interesting applications in the medical field. One example is guiding visually impaired individuals or helping people improve their general wellbeing with feedback regarding their physical activities. The band is able to record sensory data from an accelerometer, a gyroscope and a magnetometer. This opens the possibility to use that information for activity monitoring with deep learning methods. All code and further resources are available at https://github.com/Spackelter/FEEDI.

Keywords: Wearables · Navigation · Guidance · 3D printing · Additive manufacturing · Rapid prototyping · Haptic feedback · Tactile feedback · Vibration feedback · Data collection · Pedestrians · Sports

1 Introduction

Over the last decades, smartphones have become perpetual companions to us. They put a huge amount of diverse applications at our permanent disposal. Amongst them, there a lot of navigation apps able to guide us through everyday life. Whether it is to find the closest supermarket or a specific address, to do sightseeing or just to go for a walk, our electronic helpers are always at our side. However, conventional navigation methods have the disadvantage that they require the user to constantly look down at a display. This is not only uncomfortable but can also be distracting from the environment. In situations like in traffic, it can even be dangerous. Korpinen et al. [1] state that mobile phones can cause close call situations and accidents. This paper describes the prototyping process of a foot bracelet, which can guide the user to his destination using haptic feedback. For this purpose, the device contains four vibration motors fixed in the

© The Editor(s) (if applicable) and The Author(s), under exclusive license to Springer Nature Switzerland AG 2020
T. Ahram et al. (Eds.): IHIET 2020, AISC 1152, pp. 349–355, 2020.
https://doi.org/10.1007/978-3-030-44267-5_52

front, back and on both sides of the band respectively. As a result, a multitude of directions can be represented by making one or two motors vibrate at the same time with either identical or different intensities. Through a smartphone app, the user can fine tune the haptic feedback and select their destination.

The topic 'navigation using haptic feedback' has been tackled in a variety of different ways. With the idea to follow the trend of smartwatches, Dobbelstein et al. [2] built a wristband including four vibration motors for navigation purposes. In a similar project, Pielot et al. [3] built a belt containing vibration motors. Meier et al. [4] briefly inspected several devices each providing navigation information as haptic feedback to a different body part. They then went on to evaluate shoes fulfilling this task more in detail. Azenkot et al. [5] tested three smartphone-based haptic navigation methods. Amemiya et al. [6, 7] built and enhanced a circular apparatus capable of creating a pseudo-force into one of eight cardinal directions (multiples of 45°). The mentioned papers deemed their respective navigation methods as intuitive and effective. Meier et al. [4] even suggest that providing navigation information through haptic rather than visual feedback can help users decrease their stress level.

To the best of our knowledge, there is currently no published approach based on a foot bracelet like discussed in this paper. This implementation form combines the advantages of other shapes: It is slim, easy to put on, not tied to a specific piece of clothing and the feedback is very intuitive as the motors always face the same direction in respect to the user orientation.

2 Prototyping, Electrical Design and Program Design

The task of constructing the band was split up into multiple challenges. First, a general concept for the navigation process was needed. Building on this, the next step consisted in defining the fundamental functionalities of the band as well as selecting a set of electronic components able to fulfill them. We designed a 3D-printable shell that, at the same time, is slim and able to fit all the necessary electronics. The last task contained the challenges of wire-management and finding a closing mechanism allowing the user to easily put on and take off the band.

Figure 1 describes how the navigation task is executed. Through an app, the user can choose the target location and start the navigation. From that point on, smartphone and foot bracelet co-operate to guide the user towards his target. The phone periodically calculates the user position through GPS as well as the angle between the user and his target in respect to north. The latter is then transmitted via Bluetooth to the foot bracelet, which also calculates the user orientation in respect to north. Thereof, FEEDI calculates the angle between user and target location (see Fig. 1, right). By making one or two motors vibrate at the same time with identical or different intensities, each possible angle between them can be represented. Thus, if the band contains motors which are distributed around the leg, all possible directions can be represented. Using this technique, the band guides the user to his target by periodically vibrating towards it (angle ρ in Fig. 1).

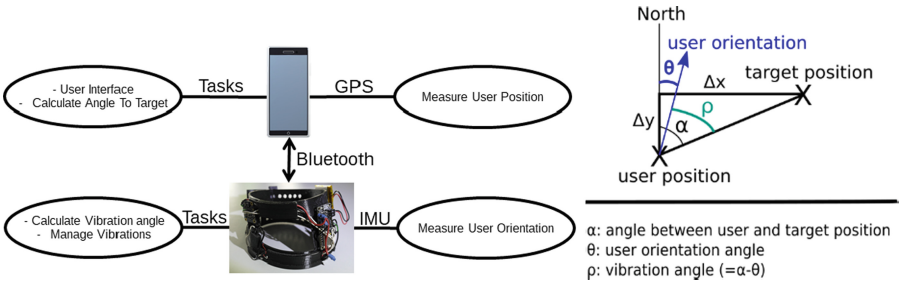

Fig. 1. Functional principle of FEEDI - *Left image*: Overall setup (sensor tasks and general tasks of the devices and communication channel between them) *Right image*: How the vibration angle ρ is calculated.

To fulfill its duties, the band needs a controller, Bluetooth capacities, a magnetometer to calculate the user orientation and vibration motors, which can be controlled individually. As the system needs to know the deflection of the user's leg in order to interpret the magnetometer data correctly, a gyroscope is needed. Therefore, we chose the Adafruit Feather 32u4 BLE as a microcontroller board. It includes Bluetooth capacities and a connector for powering the device using a Li-Po battery (3.7 V, 500 mAh). As an orientation sensor, Bosch's BNO055 IMU has been selected in form of an Adafruit breakout board. In addition to the needed sensors, the BNO055 contains an accelerometer, which can be used for auto-calibration of the user orientation based on Earth's gravitational field. The microcontroller board and the sensor module communicate via I2C. The Adafruit Feather 32u4 BLE also controls the intensities of the vibration motors through PWM. The vibration motors are consuming around 60 mA. However, the maximum output current of the microcontroller's logic pins is only 10 mA. Therefore, the motors are wired directly to its voltage pin (maximum output current: 400 mA) and can be pulled to ground through MOSFETs (see Fig. 2).

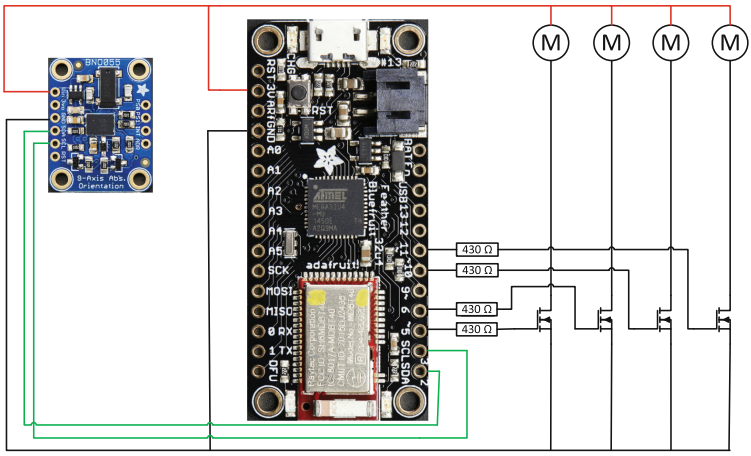

Fig. 2. Wiring diagram of FEEDI using the BNO055 Adafruit breakout board (*left*), the Adafruit Feather 32U4 BLE (*middle*), some 420 Ω resistors, MOS-FETs and vibration motors.

3 User Study – Vibration Perception at the Ankle

A study with 12 participants (4 female, 8 male, aged between 22 and 60 years, average age: 37.7 years, standard deviation: 16.8 years) was conducted to determine the number of vibration motors needed to display the direction of the target with sufficiently high resolution. For this purpose, the 'Vibration Perception Sock' represented in Fig. 3 (left) was built. It contains eight vibration motors arranged as displayed in Fig. 3 (right). As mentioned in the previous section, angles are represented by making one or two motors vibrate at the same time with identical or different intensities (controlled via PWM). As displayed in Fig. 3 (left), a rubber band was put around the sock to ensure that all the vibration motors have skin-contact.

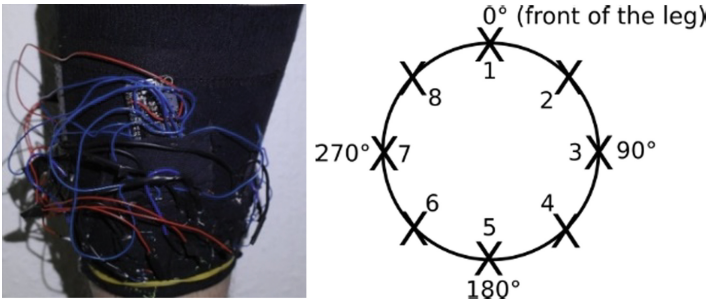

Fig. 3. 'Vibration Perception Sock'-setup. The crosses represent the vibration motor positions.

A series of 12 angles was displayed to them using all the 8 built-in motors. The same angles (in a different order to avoid influencing the results) were then displayed using only motors 1, 3, 5 and 7 and, finally, the procedure was repeated using only motors 2, 4, 6 and 8. The subjects were given the task to identify each of the represented angles. As a help, they were provided with a circle annotated with all angles that are integer multiples of 10°. The average value and standard deviation of the angular errors have been calculated for all 3 vibration modes. Furthermore, errors up to 30° have been judged neglectable for the navigation task (since it was deemed that the user only needs to roughly know the direction in which his target is lying) while all 'small' errors between 30° and 45° and 'big' errors above 45° have been counted for each of the vibration modes. The results are summarized in Table 1. As can be seen, the methods do not substantially differ from each other in effectiveness. Using these results, all 3 modes have been deemed adequate. Hence, to minimize wiring efforts, only 4 vibration motors are included in the band. The motors are placed in the front, on the left, on the right and in the back of the band as the test subjects unanimously judged the feedback as less natural when it came only from motors 2, 4, 6 and 8.

Table 1. Results of the 'Vibration Perception Sock' user study

Vibration mode	Average error	Standard deviation	Small errors (>30°, ≤45°)	Big errors (>45°)
(1) All 8 motors	15.8°	15.1°	15/132 (11.4%)	4/132 (3.0%)
(2) Motors 1,3,5 and 7	15.6°	16.6°	12/132 (9.1%)	7/132 (5.3%)
(3) Motors 2,4,6 and 8	15.6°	19.7°	14/132 (10.6%)	9/132 (6.9%)

4 Mechanical Design and Final Implementation

The electronic components of the band were chosen and wired as explained in Sect. 2 (See Fig. 2). The shell of the band was designed using a CAD program and built by an (FDM) 3D-printer. For the device to fit smoothly around the user's leg, the flexible filament PolyFlex™ (by PolyMaker) was chosen as shell material. During the design of the band, a few challenges occurred: The band needed to be as slim as possible, but still able to fit all of the electronic components, the wiring needed to be managed, the components needed to be fixed to the band and an easy-to-use closing mechanism needed to be found. The final design consists of two parts glued together using superglue and is represented in Fig. 4. For wire management purposes, cable channels are included in the design. The electronic components are fixed to the shell using self-adhesive hook-and-loop tape. The closing mechanism is inspired by watch buckles and allows the user to adjust the band's circumference between 26 cm and 33 cm (top part) and between 25 cm and 30 cm (bottom part). The buckle is printed from PLA.

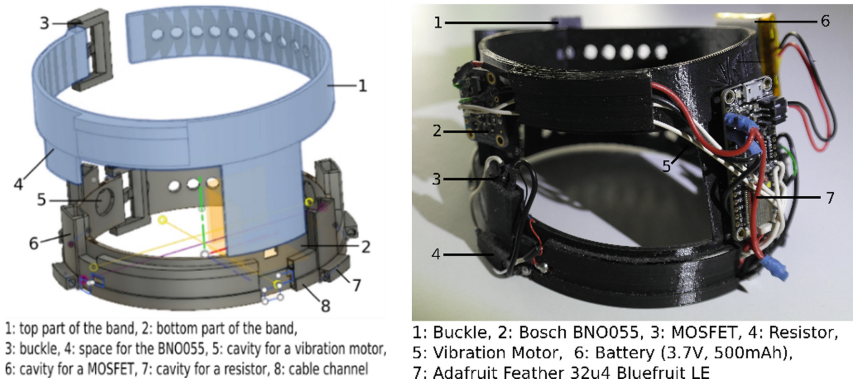

Fig. 4. Final CAD-design of the 3D-printable shell (*left*) and final prototype (*right*).

5 Evaluation

FEEDI fits the human leg smoothly and can be put on and off easily. Future iterations could involve slimming it down by integrating all of the electronic components onto a single board. The navigation works in an intuitive way.

The band could have further interesting applications. As it provides eyes-free navigation, it could be integrated into a guidance system for visually impaired people (like LIDARSEE, see [10]) or even be enhanced to work as a stand-alone device for that purpose. Some related projects specifically aim to build such a system [6, 7].

FEEDI contains an IMU which could be employed for tracking the user's position if a GPS signal loss occurs (for instance in the case of indoor navigation) as it has been done by Gädeke et al. [8]. Anastasopoulou et al. [9] used a barometer and an accelerometer to implement an effective algorithm for activity monitoring. This shows that, with just one additional sensor, the band's functionalities could be extended to help users track how much they exercise. In today's society, where obesity is an increasing problem, this could be a very helpful feature. Applying machine learning in this context might even allow for a more precise estimation of the user's energy expenditure.

6 Conclusion

We have designed and built a working prototype of a foot-band able to provide its user with navigation information via haptic feedback and thus guide him to his target location. The device is comfortable to wear and performs well. This could be a novel and intuitive concept entailing an improvement of safety and a reduction of stress in pedestrian navigation. Furthermore, the device's functionalities could be extended, enabling it for applications in the medical area. For one thing, as the band provides eyes-free directional feedback, it could be used for the guidance of visually impaired or blind people. Additionally, the sensory data measured by the band could be used for activity monitoring and thus help its users improve their health.

References

1. Korpinen, L., Pääkkönen, R.: Accidents and close call situations connected to the use of mobile phones. Accid. Anal. Prev. **45**, 75–82 (2012)
2. Dobbelstein, D., Henzler, P., Rukzio, E.: Unconstrained pedestrian navigation based on vibro-tactile feedback around the wristband of a smartwatch, pp. 2439–2445 (2016)
3. Pielot, M., Poppinga, B., Heuten, W., Boll, S.: PocketNavigator, p. 3131 (2012)
4. Meier, A., Matthies, D.J.C., Urban, B., Wettach, R.: Exploring vibrotactile feedback on the body and foot for the purpose of pedestrian navigation, pp. 1–11 (2015)
5. Azenkot, S., Ladner, R.E., Wobbrock, J.O.: Smartphone haptic feedback for nonvisual wayfinding, p. 281 (2011)
6. Amemiya, T., Sugiyama, H.: Navigation in eight cardinal directions with pseudo-attraction force for the visually impaired. In: IEEE International Conference on Systems, Man and Cybernetics, October 2009, pp. 27–32 (2009)

7. Amemiya, T., Sugiyama, H.: Haptic handheld wayfinder with pseudo-attraction force for pedestrians with visual impairments, p. 107 (2009)
8. Gädeke, T., Schmid, J., Zahnlecker, M., Stork, W., Muller-Glaser, K.D.: Smartphone pedestrian navigation by foot-IMU sensor fusion. In: 2012 Ubiquitous Positioning, Indoor Navigation, and Location Based Service, UPINLBS 2012 (2012)
9. Anastasopoulou, P., Tansella, M., Stumpp, J., Shammas, L., Hey, S.: Classification of human physical activity and energy expenditure estimation by accelerometry and barometry. In: Proceedings of the Annual International Conference of the IEEE Engineering in Medicine and Biology Society, EMBS, pp. 6451–6454 (2012)
10. LIDARSEE. https://www.photonikforschung.de/projekte/open-innovation/projekt/lidarsee.html. Accessed 19 Nov 2019

View publication stats