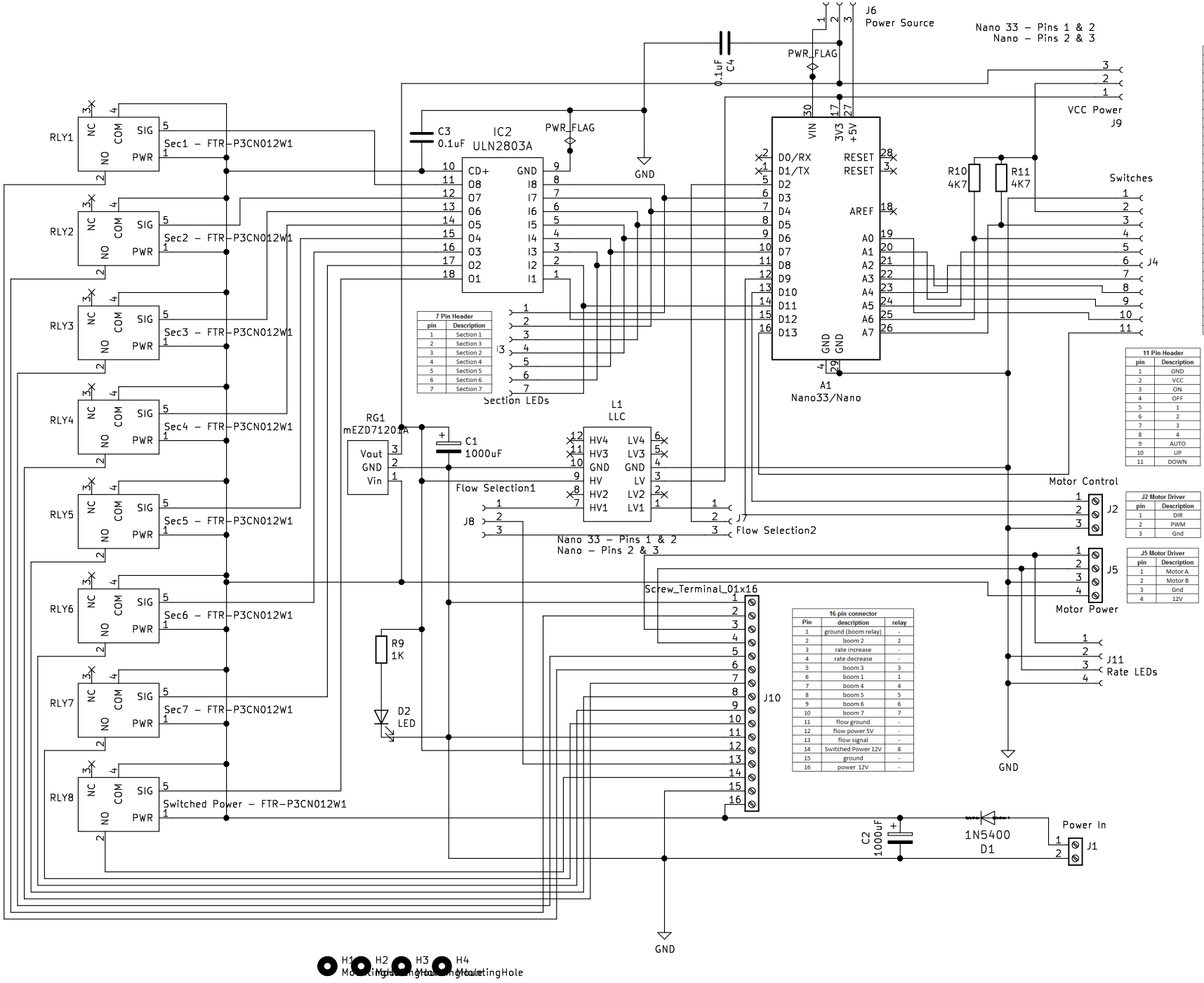

Nano		
Pin #	ID	AOG connection
1	TX	
2	RX	
3	Reset	
4	Ground	
5	D2	flow signal
6	D3	section 1 / relay 1
7	D4	section 2 / relay 2
8	D5	section 3 / relay 3
9	D6	section 4 / relay 4
10	D7	section 5 / relay 5
11	D8	section 6 / relay 6
12	D9	flow pwm
13	D10	flow dir
14	D11	section 7 / relay 7
15	D12	switched power / relay 8
16	D13	down
17	3V3	
18	AREF	
19	A0	up
20	A1	auto
21	A2	switch 4
22	A3	switch 3
23	A4	switch 2
24	A5	switch 1
25	A6	off
26	A7	on
27	5V	
28	Reset	
29	Ground	
30	VIN	

7 Pin Header	
pin	Description
1	Section 1
2	Section 3
3	Section 2
4	Section 4
5	Section 5
6	Section 6
7	Section 7

11 Pin Header	
pin	Description
1	GND
2	VCC
3	ON
4	OFF
5	1
6	2
7	3
8	4
9	AUTO
10	UP
11	DOWN

J2 Motor Driver	
pin	Description
1	DIR
2	PWM
3	Gnd

J5 Motor Driver	
pin	Description
1	Motor A
2	Motor B
3	Gnd
4	12V

16 pin connector		
Pin	description	relay
1	ground (boom relay)	-
2	boom 2	2
3	rate increase	-
4	rate decrease	-
5	boom 3	3
6	boom 1	1
7	boom 4	4
8	boom 5	5
9	boom 6	6
10	boom 7	7
11	flow ground	-
12	flow power 5V	-
13	flow signal	-
14	Switched Power 12V	8
15	ground	-
16	power 12V	-