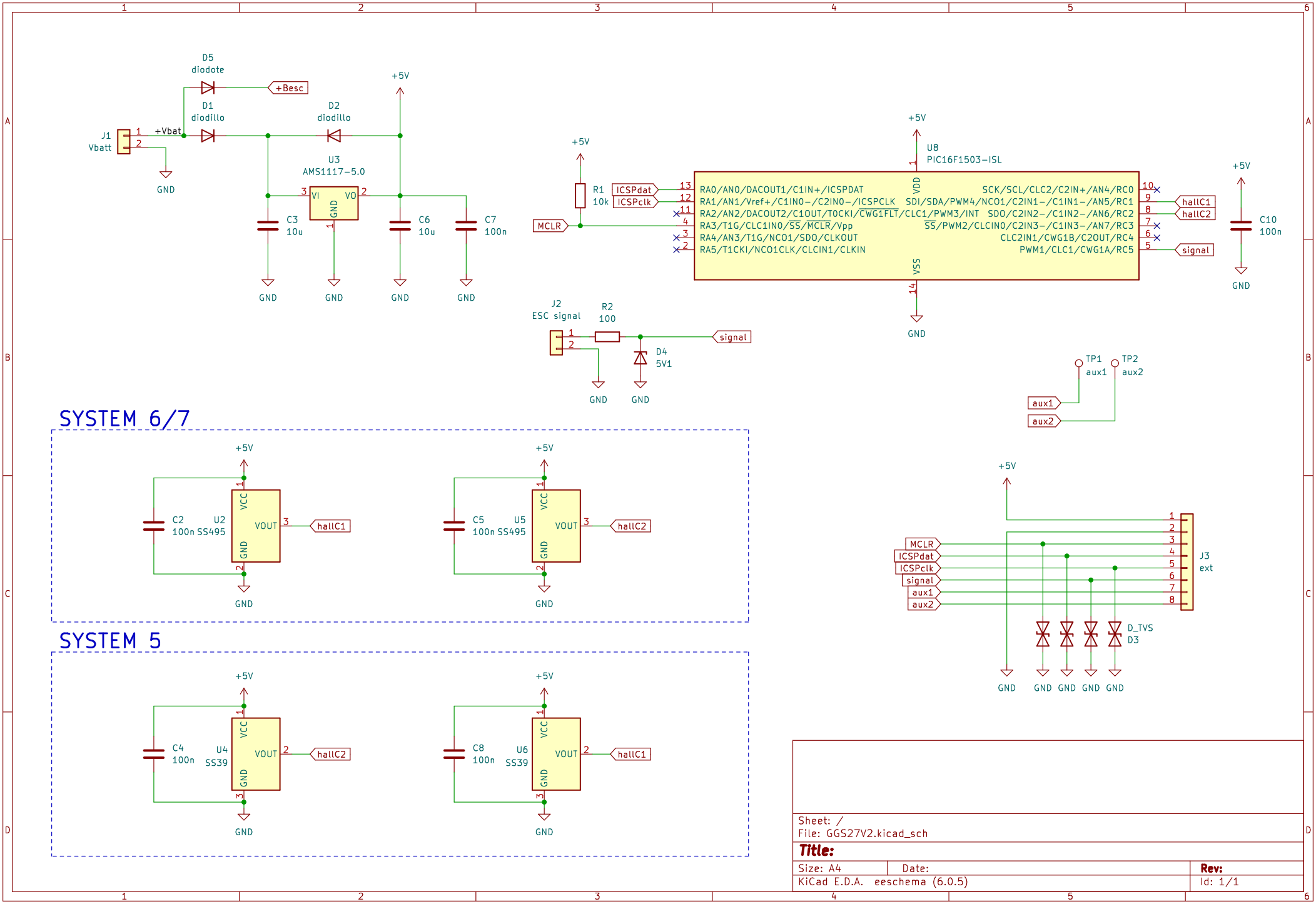
D5
diodote
+Besc
D1
diodillo
D2
diodillo
+5V
J1
Vbatt
+Vbat
GND
U3
AMS1117-5.0
VI
VO
GND
C3
10u
C6
10u
C7
100n
U8
PIC16F1503-ISL
VDD
VSS
R1
10k
ICSPdat
ICSPclk
MCLR
RA0/AN0/DACOUT1/C1IN+/ICSPDAT
RA1/AN1/Vref+/C1IN0-/C2IN0-/ICSPCLK
RA2/AN2/DACOUT2/C1OUT/T0CKI/CWG1FLT/CLC1/PWM3/INT
RA3/T1G/CLC1IN0/SS/MCLR/Vpp
RA4/AN3/T1G/NCO1/SDO/CLKOUT
RA5/T1CKI/NCO1CLK/CLCIN1/CLKIN
SCK/SCL/CLC2/C2IN+/AN4/RC0
SDI/SDA/PWM4/NCO1/C2IN1-/C1IN1-/AN5/RC1
SDO/C2IN2-/C1IN2-/AN6/RC2
SS/PWM2/CLCIN0/C2IN3-/C1IN3-/AN7/RC3
CLC2IN1/CWG1B/C2OUT/RC4
PWM1/CLC1/CWG1A/RC5
hallC1
hallC2
signal
C10
100n
J2
ESC signal
R2
100
D4
5V1
TP1
aux1
TP2
aux2
SYSTEM 6/7
C2
100n
U2
SS495
VCC
VOUT
GND
hallC1
C5
100n
U5
SS495
hallC2
SYSTEM 5
C4
100n
U4
SS39
C8
100n
U6
SS39
J3
ext
D_TVS
D3
Sheet: /
File: GGS27V2.kicad_sch
Title:
Size: A4
Date:
Rev:
KiCad E.D.A. eeschema (6.0.5)
Id: 1/1