BANGLADESH UNIVERSITY OF ENGINEERING AND TECHNOLOGY
DEPARTMENT OF ELECTRICAL AND ELECTRONIC ENGINEERING

EEE 304 (July 2025)

Digital Electronics Laboratory

Final Project Report

Section: A2 Group: 04

Smart Alarm System with Event Prioritization

Course Instructors:

Tanushri Medha Kundu,
Lecturer,
Department of EEE, BUET

Archishman Sarkar,
Adjunct Lecturer,
Department of EEE, BUET

Signature of Instructor: _____

Academic Honesty Statement:

IMPORTANT! Please carefully read and sign the Academic Honesty Statement, below. <u>Type the student ID and name, and put your signature</u>. *You will not receive credit for this project experiment unless this statement is signed in the presence of your lab instructor.*

"In signing this statement, We hereby certify that the work on this project is our own and that we have not copied the work of any other students (past or present), and cited all relevant sources while completing this project. We understand that if we fail to honor this agreement, We will each receive a score of ZERO for this project and be subject to failure of this course."

Signature: _____ **Full Name: K.M. Mostakim** **Student ID: 2106050**	**Signature:** _____ **Full Name: Zarifa Tabassum** **Student ID: 2106052**
Signature: _____ **Full Name: Rifah Tasnova** **Student ID: 2106053**	**Signature:** _____ **Full Name: Mishat Hasan Milon** **Student ID: 2106059**
Signature: _____ **Full Name: Khalid Mehebub** **Student ID: 2106065**	

Table of Contents

1 Abstract 1
2 Introduction 1
3 Design 2
3.1 Problem Formulation (PO(b)) 2
3.1.1 Identification of Scope 2
3.1.2 Literature Review 2
3.1.3 Formulation of Problem 3
3.1.4 Analysis 3
3.2 Design Method (PO(a)) 4
3.3 State Diagram 5
3.4 Simulation Model 6
3.5 Hardware Design 6
3.6 Full Source Code of Firmware 7
4 Implementation 9
4.1 Description 9
5 Design Analysis and Evaluation 12
5.1 Novelty 12
5.2 Design Considerations (PO(c)) 12
5.2.1 Considerations to public health and safety 12
5.2.2 Considerations to environment 12
5.2.3 Considerations to cultural and societal needs 13
5.3 Investigations (PO(d)) 13
5.3.1 Design of Experiment 13
5.3.2 Data Collection 14
5.3.3 Results and Analysis 14
5.3.4 Interpretation and Conclusions on Data 14
5.4 Limitations of Tools (PO(e)) 15
5.5 Impact Assessment (PO(f)) 15
5.5.1 Assessment of Societal and Cultural Issues 15
5.5.2 Assessment of Health and Safety Issues 16
5.5.3 Assessment of Legal Issues 16
5.6 Sustainability Evaluation (PO(g)) 16

5.7 Ethical Issues (PO(h)) 17
6 Reflection on Individual and Team work (PO(i)) 17
6.1 Individual Contribution of Each Member 17
6.2 Mode of TeamWork 17
6.3 Diversity Statement of Team 18
6.4 Log Book of Project Implementation 18
7 Communication to External Stakeholders (PO(j)) 18
7.1 Executive Summary 18
7.2 User Manual 19
7.3 YouTube Link 20
8 Project Management and Cost Analysis (PO(k)) 20
8.1 Bill of Materials 20
8.2 Calculation of Per Unit Cost of Prototype 20
8.3 Calculation of Per Unit Cost of Mass-Produced Unit 20
8.4 Timeline of Project Implementation 21
9 Future Work (PO(l)) 21
10 References 22

1 Abstract

This project presents a smart alarm system implemented on the Nexys A7-100T FPGA development board using Verilog HDL and Xilinx Vivado. The system monitors three security-related inputs: door intrusion, motion detection, and fire detection. A finite state machine is designed to process sensor inputs and generate corresponding alarm outputs with clear prioritization among emergency conditions. In addition to local visual and output indications on the hardware board, the system is integrated with a mobile application through an ESP-based communication interface so that alarm conditions can be observed in real time. The project combines digital design, hardware implementation, and user-oriented monitoring in a single platform. The developed prototype demonstrates how FPGA-based systems can be used to build reliable, fast, and expandable smart safety solutions for residential and institutional environments.

2 Introduction

Security and safety monitoring have become essential requirements in homes, laboratories, offices, and industrial spaces. Conventional alarm systems often rely on single-purpose microcontroller-based platforms and may not provide fast parallel response or structured prioritization among multiple emergency events. In this project, a smart alarm system has been designed using an FPGA platform to detect and respond to three important events: unauthorized door access, motion detection, and fire hazard.

The project is implemented on the Nexys A7-100T board using Xilinx Vivado. A finite state machine-based control architecture is used to ensure organized and deterministic system behavior. Depending on sensor inputs, the system activates different alarm outputs and LEDs. Fire detection is treated as the highest-priority event and remains latched until reset, while door and motion alarms are maintained for a fixed duration before returning to the idle state. This makes the system suitable for practical safety monitoring where different types of events require different response strategies.

A notable feature of this project is the addition of a mobile application interface. By using ESP as a communication bridge, the alarm status can be transmitted and viewed in real time on a mobile device. This extends the usability of the system beyond local hardware indication and introduces a user-friendly remote monitoring capability.

This problem can be considered a complex engineering problem because it involves real-time digital decision making, hardware-software interfacing, prioritization of asynchronous sensor events, timing control, and dependable implementation on actual hardware. The solution requires knowledge of digital electronics, finite state machine design, FPGA constraints, signal interfacing, and embedded communication. Alternative solutions could include a

purely microcontroller-based system, a PLC-based safety system, or a software-centric IoT alarm platform. However, the FPGA-based approach offers high speed, modularity, and deterministic behavior, making it well suited for this application.

3 Design

3.1 Problem Formulation (PO(b))

The objective of this project is to develop a smart alarm system capable of monitoring multiple safety and security inputs and generating appropriate outputs in real time. The design must reliably detect door activity, motion, and fire conditions, prioritize critical events, and provide both local and remote alarm indication. The system is expected to operate on FPGA hardware with a structured logic design that can be tested, simulated, and implemented practically.

3.1.1 Identification of Scope

The scope of this project includes the design and implementation of a digital alarm controller using FPGA-based hardware. The system accepts three sensor inputs: door sensor, motion sensor, and fire sensor. Based on these inputs, it produces alarm outputs and LED indications according to predefined logic. The design includes:

- FSM-based control logic in Verilog
- Real-time monitoring of three sensors
- Priority-based alarm handling
- Timed alarm persistence for selected events
- Hardware implementation on Nexys A7-100T
- Development using Xilinx Vivado
- Integration of a mobile application for real-time alarm observation through ESP communication

The scope does not include advanced wireless networking, battery-powered backup operation, cloud database storage, or full industrial-grade enclosure design. The current project focuses primarily on reliable digital logic implementation, hardware demonstration, and basic real-time monitoring.

3.1.2 Literature Review

Smart alarm systems are widely used in modern security and safety applications. Traditional alarm systems usually consist of individual detectors connected to a central controller that activates sirens, LEDs, or notifications when a threat is identified. In recent years, embedded and programmable platforms such as microcontrollers and FPGAs have been increasingly used to implement intelligent alarm systems due to their flexibility and real-time response capability.

Finite state machines are commonly used in digital system design for applications where the system behavior depends on current inputs and previous operating conditions. Alarm systems particularly benefit from FSM-based design because different states such as idle, warning, intrusion, and emergency can be represented clearly, and transitions can be controlled systematically. This approach improves readability, predictability, and scalability of the design.

Compared to microcontroller-based implementations, FPGA-based systems provide parallel processing capability, deterministic execution, and easier hardware-level customization. These advantages make FPGA suitable for real-time security monitoring where multiple inputs may occur simultaneously, and rapid response is required. Moreover, combining FPGA-based control with mobile monitoring enhances user accessibility and makes the system more practical for real-world use.

Based on these considerations, this project adopts an FPGA-centered design with structured FSM logic and extends it with a mobile application interface for real-time observation of alarm status.

3.1.3 Formulation of Problem

The problem addressed in this project is to design a digital smart alarm system that can monitor multiple sensors simultaneously and respond according to the severity and type of detected event. The system must satisfy the following requirements:

1. It must remain in an idle condition when no sensor is active.
2. It must activate a door alarm when the door sensor is triggered.
3. It must activate a motion alarm when the motion sensor is triggered.
4. It must activate a fire alarm when the fire sensor is triggered.
5. It must prioritize fire events over all other alarm conditions.
6. It must maintain selected alarms for a defined time duration even after the triggering condition is removed.
7. It must provide visible output through LEDs and dedicated output lines.
8. It must transmit alarm status to a mobile application for real-time viewing.

To solve this problem, the control unit is formulated as a finite state machine with four primary states: IDLE, DOOR_ALARM, MOTION_ALARM, and FIRE_ALARM. The system transitions among these states depending on sensor inputs and timing conditions. Fire alarm is designed as a latched critical state requiring manual reset, while door and motion alarms return to idle after a ten-second timeout.

3.1.4 Analysis

The alarm system was analyzed from both functional and implementation perspectives. Since multiple sensors are used, simultaneous or near-simultaneous input conditions may occur. Therefore, a priority structure is necessary. In this design, fire alarm is assigned the highest

priority because it represents the most dangerous condition. Motion alarm is given higher priority than door alarm, ensuring deterministic behavior when multiple triggers are active.

A state-machine-based design was chosen because it provides a clean way to define system operation. The design consists of present state logic, next-state logic, and output logic. The outputs depend only on the present state, making the system a Moore-type finite state machine. This simplifies output behavior and makes the circuit easier to verify.

Timing analysis is also important in this project. To avoid abrupt return to idle when door or motion signals disappear, counters are used to maintain the corresponding alarm states for ten seconds. With a 100 MHz system clock, a ten-second delay requires counting 1,000,000,000 clock cycles. This was incorporated into the design through dedicated counters for door and motion alarm states.

From a hardware point of view, the Nexys A7-100T board provides a suitable FPGA platform for implementation, while the XDC constraints file maps the clock, reset, sensor inputs, outputs, and LEDs to the required board pins. The addition of ESP-based communication further extends the design by allowing alarm data to be transferred to a mobile application. As a result, the complete system is not only a digital logic exercise but also a practical smart monitoring prototype.

The overall analysis shows that the proposed solution is modular, expandable, and suitable for real-time alarm monitoring applications. Future improvements can include more sensors, buzzer integration, wireless communication, and event logging.

3.2 Design Method (PO(a))

The smart alarm system was designed using a finite state machine approach in Verilog HDL. Based on the project requirements, four operating states were defined: IDLE, DOOR_ALARM, MOTION_ALARM, and FIRE_ALARM. This method was selected because it provides a clear and organized way to control multiple alarm conditions in a digital system.

The design process began by setting the transition conditions among states according to sensor inputs and alarm priority. Fire was treated as the highest-priority event, followed by motion and then door detection. To improve practical operation, timing control was added so that door and motion alarms remain active for a fixed period before returning to the idle state.

After defining the logic, the controller was coded in Verilog and implemented in Xilinx Vivado for the Nexys A7-100T board. The hardware connections were assigned through the constraint file. To extend the system for real-time monitoring, ESP was used as an interface between the FPGA outputs and the mobile application.

Thus, the design method combined FSM-based digital design, timing control, FPGA implementation, and mobile app interfacing to realize the complete alarm system.

3.3 State Diagram

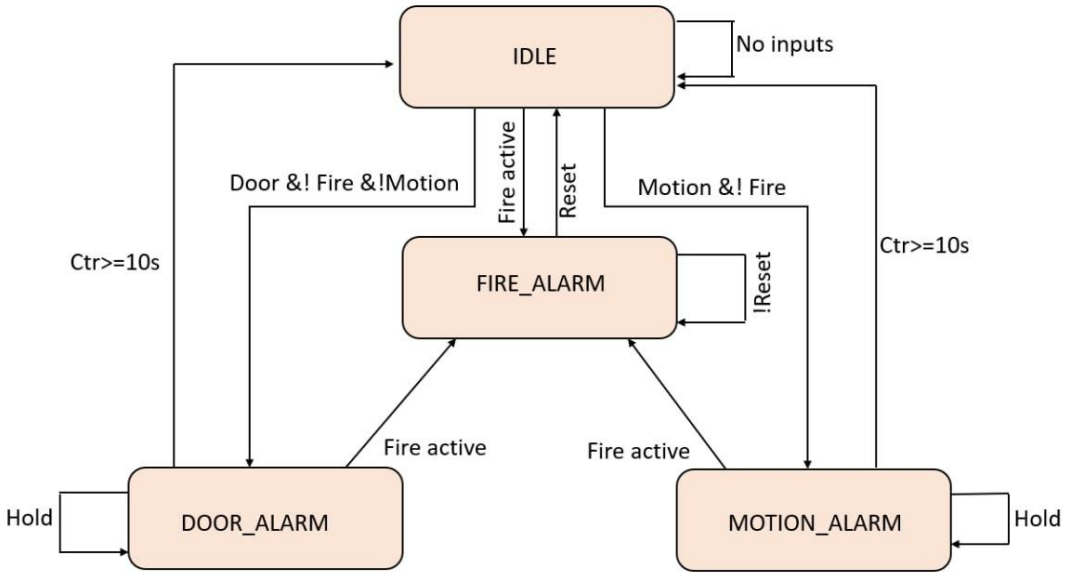

Figure 01 : State Diagram of FSM

This is the Moore-type FSM of the smart alarm system. It has 4 states: IDLE, DOOR_ALARM, MOTION_ALARM, and FIRE_ALARM.

IDLE State is the starting state. The system stays here as long as there are no sensor inputs active. From IDLE, three transitions are possible:

- If fire is detected → goes to FIRE_ALARM
- If motion is detected and no fire → goes to MOTION_ALARM
- If door is triggered and no fire and no motion → goes to DOOR_ALARM

The system enters DOOR_ALARM state when only the door sensor is triggered. It has a self-loop labeled "Hold" — meaning it stays in this state while the counter is still running. Three exits exist:

- If fire becomes active → immediately jumps to FIRE_ALARM
- If counter reaches 10 seconds (Ctr >= 10s) → returns to IDLE
- Fire can interrupt at any point, even mid-countdown

MOTION_ALARM State has same structure as DOOR_ALARM. Entered when motion is detected without fire. Also has a Hold self-loop. Exits:

- If fire becomes active → jumps to FIRE_ALARM
- If counter reaches 10 seconds → returns to IDLE

FIRE_ALARM State is the highest priority and most critical state. It has a self-loop labeled "!Reset" — meaning it stays here indefinitely as long as reset is not pressed. Notably:

- No sensor condition can exit this state — only a manual reset can
- Both DOOR_ALARM and MOTION_ALARM can be interrupted into this state at any time
- Once reset is pressed → returns to IDLE

3.4 Simulation Model

The simulation model was developed to verify the functional behavior of the smart alarm system before hardware implementation. The Verilog design was simulated in Vivado by applying clock, reset, and different combinations of sensor inputs.

The simulation was used to observe state transitions, output response, and timing behavior. Special attention was given to the priority of alarms and the ten-second hold operation for door and motion conditions. The fire alarm behavior was also checked to ensure that it remains active until reset.

By testing different input cases, the simulation confirmed that the system responds correctly to sensor activity and follows the intended alarm logic. This step helped validate the design before downloading it to the FPGA board.

3.5 Hardware Design

The hardware implementation of the smart alarm system was carried out on the Nexys A7-100T FPGA board using Xilinx Vivado. The board receives three sensor inputs for door, motion, and fire detection and processes them through the Verilog-based control logic.

A 100 MHz onboard clock is used for system operation, and a reset switch is provided to return the system to the idle state when required. The alarm outputs are connected to dedicated output pins, while three onboard LEDs indicate the active alarm condition. Proper pin assignment and I/O configuration were defined in the constraint file to ensure correct hardware operation.

The designed module was synthesized and implemented on the FPGA, where it continuously monitors the sensor inputs and produces the required outputs according to the defined logic. ESP was also connected as an interfacing unit so that the alarm status from the hardware can be viewed in real time through the mobile application.

Thus, the hardware design combines sensor interfacing, FPGA-based control, output indication, and app-based monitoring in a compact and practical implementation.

3.6 Full Source Code of Firmware

```
module smart_alarm_system (
    input clk,
    input reset,

    input fire_sensor,
    input door_sensor,
    input motion_sensor,

    output reg [2:0] led,
    output reg door_out,
    output reg motion_out,
    output reg fire_out
);

    parameter IDLE         = 2'b00;
    parameter DOOR_ALARM   = 2'b01;
    parameter MOTION_ALARM = 2'b10;
    parameter FIRE_ALARM   = 2'b11;

    parameter TEN_SEC = 32'd1000000000; // 10 sec @100MHz

    reg [1:0] state, next_state;

    reg [31:0] door_counter;
    reg [31:0] motion_counter;

    wire fire_active;
    assign fire_active = ~fire_sensor;   // Inverted
logic

    // ==================================================
    // State Register
    // ==================================================
    always @(posedge clk or posedge reset) begin
        if (reset)
            state <= IDLE;
        else
            state <= next_state;
    end

    // ==================================================
    // 10-second Counters
    // ==================================================
    always @(posedge clk or posedge reset) begin
        if (reset) begin
            door_counter   <= 0;
            motion_counter <= 0;
        end
        else begin
            // Door timer
            if (state == DOOR_ALARM) begin
                if (door_sensor)
                    door_counter <= 0;
                else if (door_counter < TEN_SEC)
                    door_counter <= door_counter + 1;
            end
            else
                door_counter <= 0;

            // Motion timer
            if (state == MOTION_ALARM) begin
                if (motion_sensor)
                    motion_counter <= 0;
                else if (motion_counter < TEN_SEC)
                    motion_counter <= motion_counter + 1;
            end
            else
                motion_counter <= 0;
        end
    end

    // ==================================================
    // Next-State Logic
    // ==================================================
    always @(*) begin
```

```
############################
## Clock (100 MHz)
############################
set_property PACKAGE_PIN E3 [get_ports clk]
set_property IOSTANDARD LVCMOS33 [get_ports clk]
create_clock -period 10.000 -name sys_clk [get_ports
clk]

############################
## Reset (SW15)
############################
set_property PACKAGE_PIN R15 [get_ports reset]
set_property IOSTANDARD LVCMOS33 [get_ports reset]

############################
## Switches
## Door sensor (JA1)
set_property PACKAGE_PIN C17 [get_ports door_sensor]
set_property IOSTANDARD LVCMOS33 [get_ports
door_sensor]
set_property PULLDOWN true [get_ports door_sensor]

## Motion sensor (JA2)
set_property PACKAGE_PIN D18 [get_ports
motion_sensor]
set_property IOSTANDARD LVCMOS33 [get_ports
motion_sensor]
set_property PULLDOWN true [get_ports motion_sensor]

## Fire sensor (JA3)
set_property PACKAGE_PIN E18 [get_ports fire_sensor]
set_property IOSTANDARD LVCMOS33 [get_ports
fire_sensor]
set_property PULLDOWN true [get_ports fire_sensor]
############################

## Door Output (JB1)
set_property PACKAGE_PIN D14 [get_ports door_out]
set_property IOSTANDARD LVCMOS33 [get_ports
door_out]

## Motion Output (JB2)
set_property PACKAGE_PIN F16 [get_ports motion_out]
set_property IOSTANDARD LVCMOS33 [get_ports
motion_out]

## Fire Output (JB3)
set_property PACKAGE_PIN G16 [get_ports fire_out]
set_property IOSTANDARD LVCMOS33 [get_ports
fire_out]


## LEDs
############################
set_property PACKAGE_PIN H17 [get_ports {led[0]}]
set_property IOSTANDARD LVCMOS33 [get_ports
{led[0]}]

set_property PACKAGE_PIN K15 [get_ports {led[1]}]
set_property IOSTANDARD LVCMOS33 [get_ports
{led[1]}]

set_property PACKAGE_PIN J13 [get_ports {led[2]}]
set_property IOSTANDARD LVCMOS33 [get_ports
{led[2]}]
```

```
        case (state)

            IDLE:
                if (fire_active)
                    next_state = FIRE_ALARM;
                else if (motion_sensor)
                    next_state = MOTION_ALARM;
                else if (door_sensor)
                    next_state = DOOR_ALARM;
                else
                    next_state = IDLE;

            DOOR_ALARM:
                if (fire_active)
                    next_state = FIRE_ALARM;
                else if (motion_sensor)
                    next_state = MOTION_ALARM;
                else if (door_counter >= TEN_SEC)
                    next_state = IDLE;
                else
                    next_state = DOOR_ALARM;

            MOTION_ALARM:
                if (fire_active)
                    next_state = FIRE_ALARM;
                else if (motion_counter >= TEN_SEC)
                    next_state = IDLE;
                else
                    next_state = MOTION_ALARM;

            FIRE_ALARM:
                next_state = FIRE_ALARM;   // Manual
reset only

            default:
                next_state = IDLE;
        endcase
    end

    // ==================================================
    // Output Logic
    // ==================================================
    always @(*) begin
        led        = 3'b000;
        door_out   = 0;
        motion_out = 0;
        fire_out   = 0;

        case (state)
            DOOR_ALARM: begin
                led        = 3'b001;
                door_out   = 1;
            end

            MOTION_ALARM: begin
                led        = 3'b010;
                motion_out = 1;
            end

            FIRE_ALARM: begin
                led      = 3'b100;
                fire_out = 1;
            end
        endcase
    end

endmodule
```

Table: Source Code for the main program

The code on the left side is the main module and design source in .v format. The code on the right side is the constraint file in .xdc format.

4 Implementation

4.1 Description

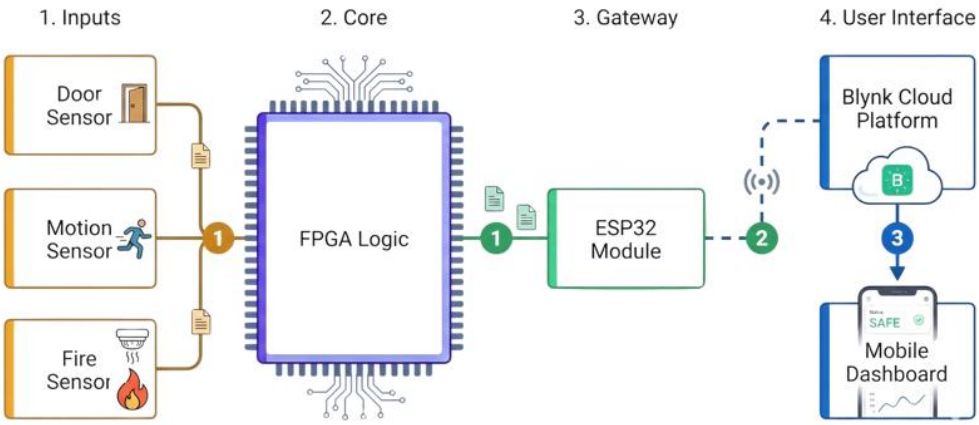

Figure 02 : System architecture block diagram

Figure 2 presents the overall system architecture of the implemented smart alarm system. The design is organized into four functional layers. The first layer consists of the three sensor inputs — door, motion, and fire — whose signals are fed into the second layer, which is the FPGA logic running on the Nexys A7-100T board. The processed alarm outputs are then passed to the third layer, an ESP32 module acting as a wireless gateway. Finally, the ESP32 communicates with the Blynk Cloud platform, which relays the alarm status to the mobile dashboard in the fourth layer. This pipeline ensures that every alarm event detected by the hardware is simultaneously visible on the physical board and on the user's mobile device in real time.

Figure 3 : Full hardware setup photo

Figure 3 shows a photograph of the complete assembled hardware prototype during active testing. The Nexys A7-100T FPGA board is visible at the top right, with its onboard LEDs lit to indicate system activity. The breadboard in the center holds the ESP32 module along with the interconnection wiring between all peripherals. A digital oscilloscope (the red unit on the

left) was used to observe signal waveforms at key I/O pins during the testing phase. Power to the breadboard and sensor modules is provided by an external breadboard power supply module, set to output 3.3V to remain within the FPGA's acceptable I/O voltage range. The mobile phone in the foreground displays the Blynk-based "home alarm" dashboard, showing the real-time status of the PIR, flame, and door channels — each reading 0 in the idle state, confirming that the app correctly reflects the system's current condition.

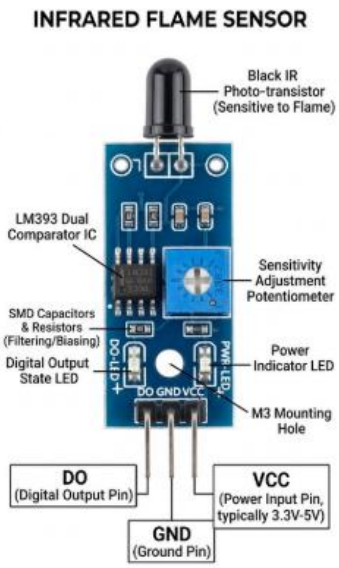

Figure 04 : Labeled diagram of the Infrared Flame Sensor module

Figure 4 illustrates the internal architecture of the infrared flame sensor module used in this project. The active sensing element is a black IR phototransistor that is sensitive to the wavelength of light emitted by flames. An onboard LM393 dual comparator IC processes the analog signal from the phototransistor and converts it to a clean digital output. A sensitivity adjustment potentiometer allows the detection threshold to be tuned for the environment. The module outputs a digital signal (DO pin) that goes active when a flame is detected, along with a power indicator LED for visual confirmation of module operation. The module interfaces with the FPGA through the GND and VCC (3.3V–5V) supply pins and the DO output pin, which is connected to the designated Pmod port on the Nexys A7 board.

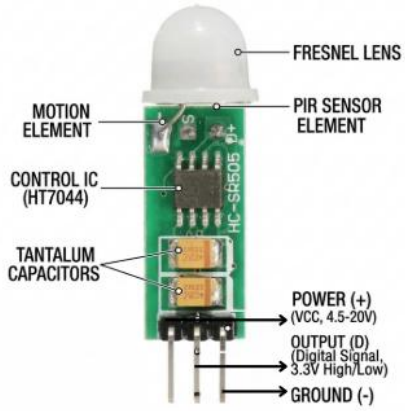

Figure 05 : Labeled diagram of the HC-SR505 PIR Motion Sensor

Figure 5 shows the HC-SR505 Mini Infrared PIR Motion Sensor selected for motion detection in this project. The sensor uses a passive infrared detection principle: a pyroelectric PIR sensor element, covered by a Fresnel lens that focuses ambient infrared radiation, detects changes in heat signature caused by movement. The HT7044 control IC on the module processes the sensor signal and generates a digital high output whenever motion is detected. Tantalum capacitors on the module provide filtering and stable power decoupling. The sensor outputs a 3.3V digital signal, making it directly compatible with the FPGA's Pmod I/O pins without the need for a level shifter.

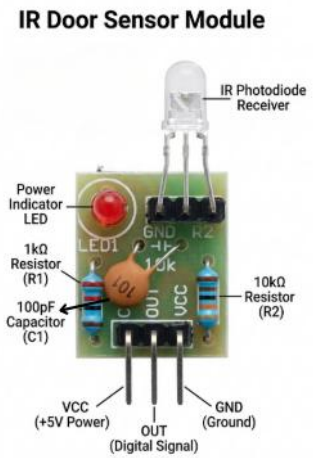

Figure 06 : Labeled diagram of the IR Door Sensor / Laser Receiving Module

Figure 6 presents the IR Door Sensor module, which in this implementation serves as the laser-receiving element for door intrusion detection. The module consists of an IR photodiode receiver that detects the presence of an infrared beam from an aligned laser transmitter. Under normal conditions, the laser beam continuously falls on the photodiode, keeping the output in a defined logic state. When an object or person interrupts the beam — such as when a door is opened — the photodiode no longer receives the signal, and the output transitions to the opposite state, triggering the door alarm in the FPGA. The module contains a 1kΩ current-limiting resistor (R1), a 10kΩ pull resistor (R2), and a 100pF filter capacitor (C1) for signal conditioning. Its three-pin interface (VCC, OUT, GND) connects directly to the Pmod header of the Nexys A7 board.

5 Design Analysis and Evaluation

5.1 Novelty

The novelty of this project lies in combining FPGA-based real-time alarm processing with mobile app-based monitoring in a single low-cost prototype. Unlike a basic alarm circuit, this system not only detects door, motion, and fire events with priority-based digital logic, but also allows the user to observe alarm conditions instantly through a mobile application using ESP interfacing.

5.2 Design Considerations (PO(c))

The design was developed by considering user safety, practical usability, and real-time monitoring requirements. In addition to technical performance, attention was given to health, environmental, and social aspects so that the system remains suitable for everyday use.

5.2.1 Considerations to public health and safety

Public health and safety were major considerations in this project, especially because the system includes fire detection and intrusion monitoring. Fire alarm was given the highest priority in the control logic so that the most dangerous condition is detected and indicated immediately. This is important because delayed fire response can lead to severe loss of life and property.

The system was also designed so that the fire alarm remains active until manual reset. This ensures that a critical emergency is not ignored due to a temporary signal change. Similarly, door and motion alarms improve safety by helping detect unauthorized access or suspicious movement within a monitored area.

The mobile app monitoring feature further supports safety by allowing users to observe alarm conditions in real time. This can help faster response in emergency situations, especially when the user is not directly watching the hardware unit.

5.2.2 Considerations to environment

Environmental consideration in this project mainly relates to efficient use of electronic resources and low-power digital implementation. Since the design is FPGA-based and uses digital logic only when required, it avoids unnecessary mechanical components and reduces wear-related waste.

The project also uses a compact hardware structure with limited external components, which helps minimize material usage in the prototype stage. In addition, the use of real-time fire detection can indirectly reduce environmental damage by helping prevent fire-related destruction of property and surrounding areas.

Although this project is a small-scale academic prototype, future improvements may focus on lower-power implementation, recyclable enclosure materials, and wireless monitoring to further improve environmental compatibility.

5.2.3 Considerations to cultural and societal needs

The project addresses an important social need by improving safety and security in homes, offices, laboratories, and similar environments. In many communities, people need affordable and easy-to-use systems that can provide warning against intrusion and fire hazards. This project supports that need through a simple but practical alarm design.

The addition of a mobile app also reflects present societal demand for smart and connected systems. People now prefer monitoring systems that provide real-time information in a convenient form. By making the alarm status visible on a mobile device, the system becomes more accessible and user-friendly.

From a cultural point of view, safety and protection of family, workplace, and personal property are common concerns across society. Therefore, the project has relevance in daily life and can be adapted to suit different local needs.

5.3 Investigations (PO(d))

5.3.1 Design of Experiment

The experiment was structured to validate the Finite State Machine (FSM) transitions under various sensor inputs. Using Xilinx Vivado's simulation environment, a testbench was created to force specific binary values onto the fire sensor, door sensor, and motion sensor pins. The test scenarios were specifically designed to check if the system could handle "race conditions", where two sensors trigger at the exact same time, to ensure the priority logic (Fire > Motion > Door) held true.

The hardware part was built using sensors of the respective events.

- HC-SR505 Mini Infrared PIR Motion Sensor – for detecting any motion
- Flame Sensor Fire Detection Module – for fire detection
- Laser Receiving Sensor Module and Laser – for detecting door intrusion

The sensors were integrated with respective pins of the FPGA board through some midway connections in the breadboard. Power has been supplied to the breadboard by a breadboard power supply module where the input voltage rating is 6.5-12V, and the output voltage rating is 3.3/5V. We have used the 3.3 V as FPGA board cannot operate beyond this voltage.

Necessary codes were run in Xilinx Vivado using Moore type FSM model to respond to the inputs immediately. The fire detection has been kept in highest priority and it is sustained till reset , while the door and motion detection has been maintained for a fixed duration.

A mobile application interface has been designed in order to make this alarm system more user friendly. Via Arduino the alarm status can be transmitted and observed in the app on a mobile device.

5.3.2 Data Collection

Data was collected by observing the waveform outputs in oscilloscope, the physical Nexys A7-100T board LEDs and in the app. Key metrics recorded included:

- **Clock Cycle Counts:** Verifying that the door counter and motion counter reached 1 times 10^9 cycles to provide exactly 10 seconds of delay at a 100 MHz clock frequency.
- **Logic Levels:** When any sensor works, it triggers the corresponding output turning on the LEDs. The priority system works as it prioritize the fire events over all other alarm conditions, keeping the fire LED on turning off the others. This phenomenon can also be observed using the application where 0 means off and 1 means on.
- **State Persistence:** Recording whether the system remained in the fire alarm state after the sensor signal was removed. Manual reset is to be done to stop the fire alarm.

5.3.3 Results and Analysis

The analysis confirmed that the implementation behaves as a Moore-type FSM, meaning the alarm outputs are strictly tied to the current state, preventing glitches from raw sensor noise.

- **Priority Hierarchy:** Analysis showed that if the system was in DOOR_ALARM and a fire active signal was detected, the next state immediately updated to FIRE_ALARM, overriding the door alarm.
- **Timeout Functionality:** The results verified that the DOOR_ALARM and MOTION_ALARM states successfully transitioned back to IDLE after the 10-second threshold was reached.
- **Latching Verification:** It was observed that the FIRE_ALARM state had no transition path back to IDLE except through the global reset (SW15), ensuring critical safety alerts cannot be accidentally cleared.

5.3.4 Interpretation and Conclusions on Data

The investigation concludes that the FPGA-based approach is superior to basic microcontroller solutions because it offers deterministic execution, the system response time is fixed and not subject to software hangs or processing loops. The data proves that the smart alarm system reliably categorizes security threats and provides a prioritized, timed response that is essential for residential and institutional safety.

5.4 Limitations of Tools (PO(e))

1. Xilinx Vivado is effective for design, simulation, and implementation, but it cannot fully represent real-world sensor behavior unless detailed models are added.
2. Practical issues such as sensor noise, false triggering, unstable signals, or connection errors may not appear clearly in simulation.
3. The Nexys A7-100T board provides strong digital processing capability, but it does not directly support mobile communication by itself.
4. Because of this, ESP had to be used as an additional interfacing device, which increases hardware dependency.
5. Adding ESP also makes the system slightly more complex in terms of connection and communication.
6. The mobile app is suitable for real-time status display, but it may have limitations in:

    - long-term data storage,
    - event logging,
    - cloud connectivity,
    - advanced notification features,
    - large-scale system expansion.

7. The current toolchain is well suited for an academic prototype, but it is not fully optimized for industrial-scale deployment.

Therefore, the tools were useful for implementation, but they still have limitations in simulation realism, communication flexibility, and scalability.

5.5 Impact Assessment (PO(f))

The developed smart alarm system has potential impact on safety, user awareness, and practical monitoring in everyday environments. Its effect can be assessed from social, health, and legal perspectives.

5.5.1 Assessment of Societal and Cultural Issues

From a societal perspective, the project contributes positively by promoting security awareness and emergency preparedness. A system that can detect motion, door intrusion, and fire in real time can help users feel safer in homes, offices, and educational environments. This may reduce the chance of unnoticed hazards and improve response time during emergencies.

The mobile app feature makes the system more aligned with modern social behavior, where users expect smart devices to provide immediate information. This increases convenience and encourages wider acceptance of such monitoring systems.

Culturally, the project is relevant because protection of people and property is a universal concern. The system can be adapted for different settings depending on local needs, making it socially meaningful even beyond the academic context.

5.5.2 Assessment of Health and Safety Issues

The strongest impact of the project is in the area of health and safety. Fire detection can help reduce the risk of injury, death, and property damage by providing rapid indication of a dangerous condition. Prioritizing fire alarm over other events strengthens the safety function of the design.

Door and motion monitoring also improve personal safety by identifying possible intrusion or suspicious movement. This is especially useful in places where continuous human supervision is not possible.

However, the safety effectiveness of the system depends on proper sensor functioning and correct installation. A false alarm may cause inconvenience, while a missed alarm may reduce trust in the system. Therefore, careful testing and reliable interfacing are important for safe practical deployment.

5.5.3 Assessment of Legal Issues

At the prototype level, the project does not raise major legal complications, but legal aspects become important if such a system is used in real applications. For example, installation of monitoring systems may need to comply with safety regulations, building codes, and electronic device standards.

If the system is used in shared or public spaces, user privacy and consent may also become relevant, especially when motion-based monitoring is involved. In addition, if mobile communication is extended to cloud or internet-based services in the future, data protection and cybersecurity regulations may need to be considered.

Therefore, while the present project is mainly an academic implementation, future real-world deployment should consider compliance with relevant safety, privacy, and electronic communication laws.

5.6 Sustainability Evaluation (PO(g))

The sustainability of the proposed smart alarm system is supported by its efficient digital design and minimal hardware requirements. The FPGA-based implementation ensures reliable operation with relatively low maintenance, while the compact structure reduces material usage. The system contributes to sustainability indirectly by enabling early detection of hazards such as fire, which can prevent large-scale damage to property and the environment. Additionally, the modular nature of the design allows future upgrades without complete system replacement, improving long-term usability. However, further

improvements such as low-power optimization and eco-friendly materials can enhance the sustainability of the system in real-world applications.

5.7 Ethical Issues (PO(h))

The ethical considerations of this project mainly relate to responsible use and user privacy. While the system is designed for safety and security, monitoring features such as motion detection may raise concerns if used without proper awareness or consent in shared spaces. It is important that users are informed about the presence and purpose of the system to avoid misuse. Additionally, the system should be designed to provide accurate and reliable alerts to prevent unnecessary panic or negligence due to false alarms. If extended to network-based applications in the future, data security and protection of user information will also become important ethical responsibilities.

6 Reflection on Individual and Team work (PO(i))

6.1 Individual Contribution of Each Member

Student ID	Contribution
2106050- K.M. Mostakim	Developing application
2106052-Zarifa Tabassum	Verilog Code and Simulation
2106053-Rifah Tasnova	Verilog Code and Simulation
2106059-Mishat Hasan Milon	Developing application
2106065-Khalid Mehebub	Hardware Implementation

6.2 Mode of TeamWork

The project was executed by a multidisciplinary team, with each member assigned specific roles based on their expertise. The team began with brainstorming sessions to outline the project objectives, technical specifications, and potential challenges. A clear roadmap was created, detailing the sequential steps for circuit design, prototyping, testing, and evaluation.

Regular team meetings were held to ensure all members were updated on progress and challenges. Communication tools such as telegram group and shared documents on platforms like Google Drive were used for seamless coordination. Tasks were divided into smaller, manageable units to streamline workflow and improve productivity.

Challenges encountered during the project were addressed through group discussions and peer review sessions. Team members collaborated to troubleshoot issues, such as unexpected circuit behavior or inconsistencies in data. The entire team worked collectively during the

testing phase to monitor the observations.

Feedback from testing was used to refine the design and improve performance. Team members shared knowledge, allowing individuals to learn about other aspects of the project The project culminated in a collaborative effort to compile the final report and present findings, with each team member contributing their expertise to create a comprehensive presentation for stakeholders. This collaborative approach ensured that the project leveraged the strengths of every team member, fostering efficiency, innovation, and success.

6.3 Diversity Statement of Team

Due to our diverse experiences, viewpoints, and skill sets, which foster creativity in our endeavor, our team of five students recognizes our diversity. We are adamant about fostering an inclusive workplace where everyone's opinions are respected. Together, we harmoniously blend our differences, using them as a catalyst for achieving the utmost success in our project.

6.4 Log Book of Project Implementation

Date	Milestone achieved
21 December	Distribution of projects to groups
10- 16 January	Formulation of ideas to implement the project
19 February	Hardware Implementation and Verilog code development
20- 26 February	Hardware Implementation, Verilog code modification, Application development, testing
1 March	Project completion and testing

7 Communication to External Stakeholders (PO(j))

7.1 Executive Summary

A smart alarm system has been developed using FPGA technology to improve safety and security in everyday environments. The system can detect door intrusion, motion activity, and fire hazards in real time and provide immediate alerts through LEDs and output signals. It also connects to a mobile application using ESP, allowing users to monitor alarm conditions remotely. Fire emergencies are given the highest priority to ensure quick response. This project demonstrates a reliable and low-cost solution for modern safety monitoring, combining fast digital processing with user-friendly mobile access for enhanced awareness and protection.

7.2 User Manual

1. Power ON the System

- Connect the Nexys A7-100T board to a power source and turn it on.
- Ensure the FPGA is properly programmed with the design.

2. Reset the System

- Use the reset switch (SW15) to initialize the system.
- The system will start in the IDLE state with no alarms active.

3. Sensor Operation

- **Door Sensor**: Activate to simulate door intrusion.
- **Motion Sensor**: Activate to simulate movement detection.
- **Fire Sensor**: Activate (active-low) to simulate fire condition.

4. Alarm Indication

- LED indicators show the active alarm:
  - LED[0] → Door Alarm
  - LED[1] → Motion Alarm
  - LED[2] → Fire Alarm
- Corresponding output pins also become active.

5. Alarm Behavior

- Door and motion alarms remain active for approximately 10 seconds after the sensor is deactivated.
- Fire alarm remains active until the system is reset.

6. Mobile App Monitoring

- Ensure ESP is properly connected to the FPGA outputs.
- Open the mobile application to view real-time alarm status.

7. Reset After Fire Alarm

- Press the reset switch to return the system to IDLE.

8. Safety Note

- Ensure proper sensor connections before operation.
- Avoid incorrect wiring to prevent malfunction.

7.3 YouTube Link

https://www.youtube.com/watch?v=PkwltHFsIFA

Please press Ctrl + click on the above link or copy paste the link in your browser to see a complete demonstration of our project.

8 Project Management and Cost Analysis (PO(k))

8.1 Bill of Materials

Material	Price (BDT)
HC-SR505 Mini Infrared PIR Motion Sensor	105
Flame Sensor Fire Detection Module	50
Laser Receiving Sensor Module and Laser	200
Nexys A7-100T board and Xilinx Vivado Software	Complementary in lab
ESP32	500
Wires and others	520
Total	**1375**

8.2 Calculation of Per Unit Cost of Prototype

The cost of the prototype is calculated based on the components listed in the bill of materials. Since the Nexys A7-100T FPGA board and Xilinx Vivado software were provided by the laboratory, their cost is not included in the prototype calculation.

Thus, the per unit cost of the developed prototype is 1375 BDT or 11.2 USD, excluding the FPGA board and software license.

8.3 Calculation of Per Unit Cost of Mass-Produced Unit

For mass production, the cost of FPGA board and software must be considered. The approximate costs are:

- Nexys A7-100T board ≈ 350 USD ≈ 38,500 BDT (approx.)
- Vivado software license ≈ 3000 USD ≈ 330,000 BDT (approx.)

However, in real-world production, such high-cost development boards and licensed software are not used per unit. Instead, the design would be migrated to a low-cost FPGA or microcontroller platform, and the software cost would be distributed over many units.

Assuming a simplified direct cost addition for understanding:

- Prototype components = 1375 BDT
- FPGA board cost ≈ 38,500 BDT

Estimated single-unit cost (with board) ≈ 39,875 BDT

If software cost is included per unit (not practical but theoretical):

- Total cost ≈ 39,875 + 330,000 ≈ 369,875 BDT (approximately 3015 USD)

In practical mass production:

- Software cost is a one-time investment.
- Hardware cost per unit can be significantly reduced using cheaper alternatives.

Therefore, the realistic mass-produced unit cost can be reduced close to the prototype cost range (around 3000 BDT) by using optimized hardware.

8.4 Timeline of Project Implementation

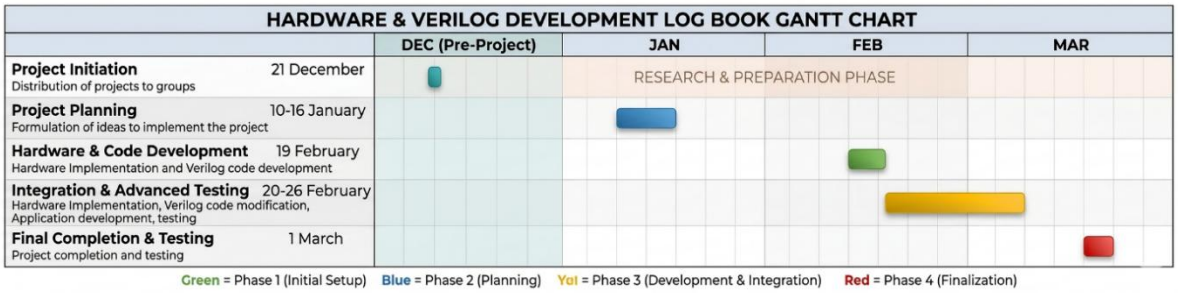

Figure 07 : Gantt chart of Project Implementation

9 Future Work (PO(l))

The proposed smart alarm system can be further enhanced to improve its functionality, efficiency, and real-world usability. The following points highlight possible future developments and extensions of the current design:

 Integrate additional sensors such as:

- gas sensor,
- temperature sensor,
- smoke sensor for more comprehensive safety monitoring.

 Replace ESP interface with wireless modules (Wi-Fi/Bluetooth) for direct communication and remote access.

 Add IoT-based connectivity to enable:

- cloud integration,
- remote monitoring from anywhere,
- real-time notifications (SMS, email, app alerts).

- Incorporate advanced algorithms to:
  - reduce false alarms,
  - improve detection accuracy,
  - enable smarter decision-making.
- Implement data logging and storage to keep record of past alarm events.
- Improve power efficiency for long-term continuous operation.
- Enhance the mobile application with:
  - better user interface,
  - detailed status display,
  - alert customization options.
- Add buzzer or siren system for stronger real-time alert indication.
- Develop a more compact and user-friendly hardware enclosure for practical deployment.
- Expand the system to support multi-room or multi-zone monitoring.
- Upgrade the prototype into a scalable and commercially viable smart security system.

10 References

- Chandrasiri, Ravi & Chandrasiri, Sanjeevi. (2016). FPGA Based Real-Time Wireless Home Control Solutions for Lighting, Security, HVAC And AV Systems.
- Piyare, R. (2013). Internet of Things: Ubiquitous home control and monitoring system using Android-based smart phone. *International Journal of Internet of Things*, 2(1), 5–11.
- Xilinx Inc., *Vivado Design Suite User Guide*, 2023.
- Nexys A7 Reference Manual. https://digilent.com/reference/programmable-logic/nexys-a7/reference-manual?srsltid=AfmBOoorKHGnN8wRm8fb_aVv-vFkfI_vJRiQ4TDrOtjmZkkVmwcPeHwt