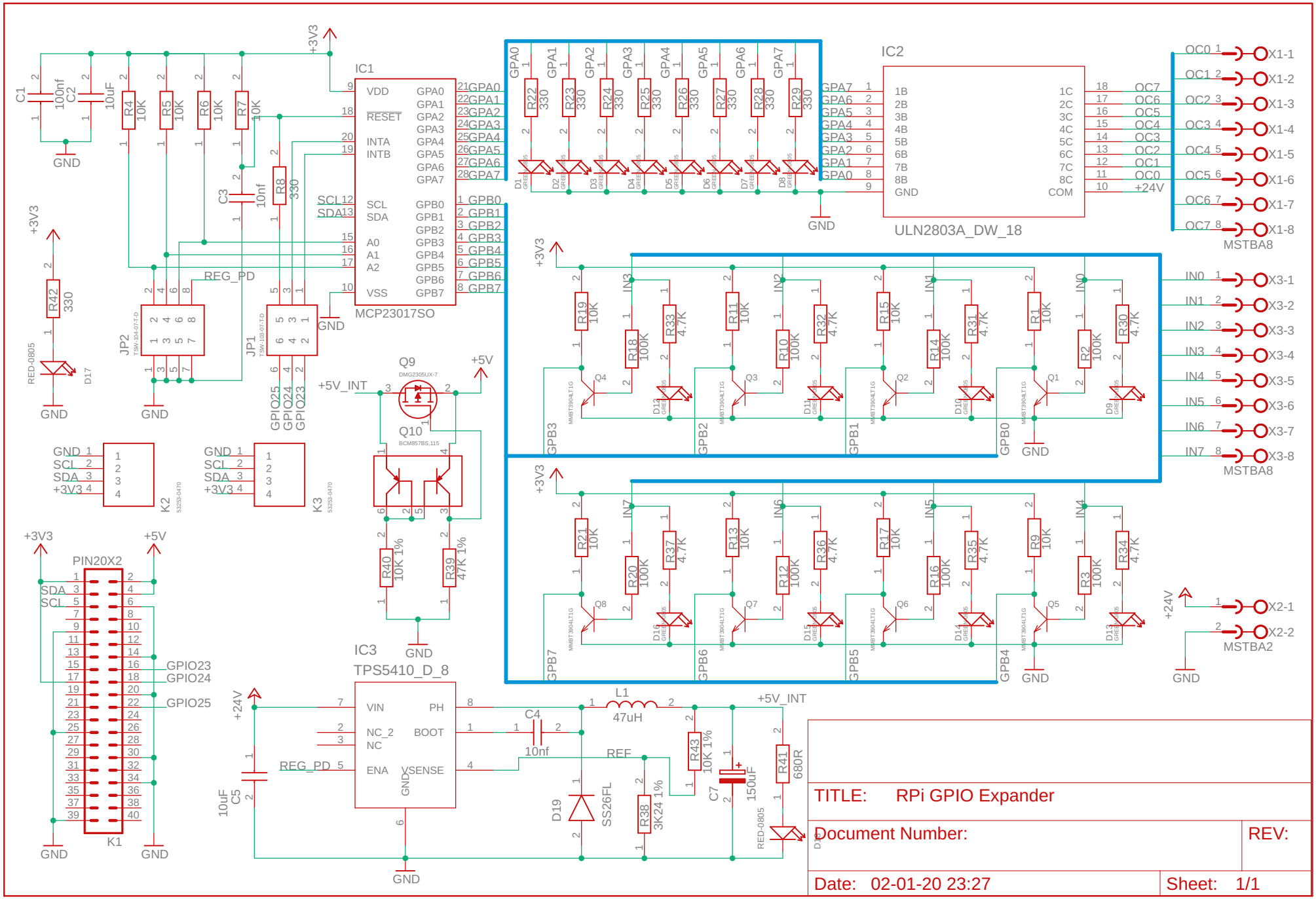
IC1
MCP23017SO
IC2
ULN2803A_DW_18
MSTBA8
MSTBA2
IC3
TPS5410_D_8
K1
PIN20X2
K2
K3
JP1
JP2
Q9
Q10
L1
47uH
C4
10nf
C7
150uF
D19
SS26FL
R43
10K 1%
R38
3K24 1%
R41
680R
R40
10K 1%
R39
47K 1%
+3V3
+5V
+5V_INT
+24V
GND
REG_PD
SCL
SDA
GPIO23
GPIO24
GPIO25
TITLE: RPi GPIO Expander
Document Number:
REV:
Date: 02-01-20 23:27
Sheet: 1/1