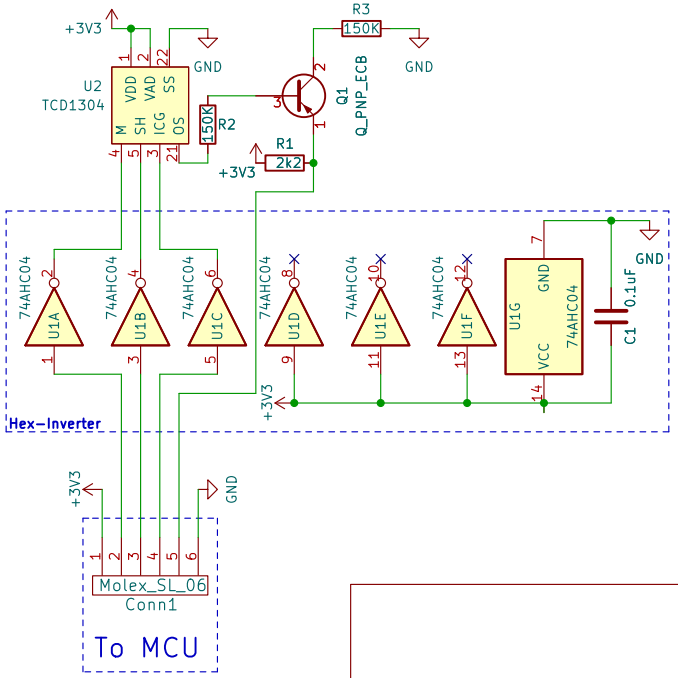

H1 MountingHole
H2 MountingHole
H3 MountingHole
H4 MountingHole

MRDT

Sheet: /
File: CCD_Board.kicad_sch

Title: CCD Board

Size: A5	Date:	**Rev: 1**
KiCad E.D.A. eeschema (6.0.7)		Id: 1/1