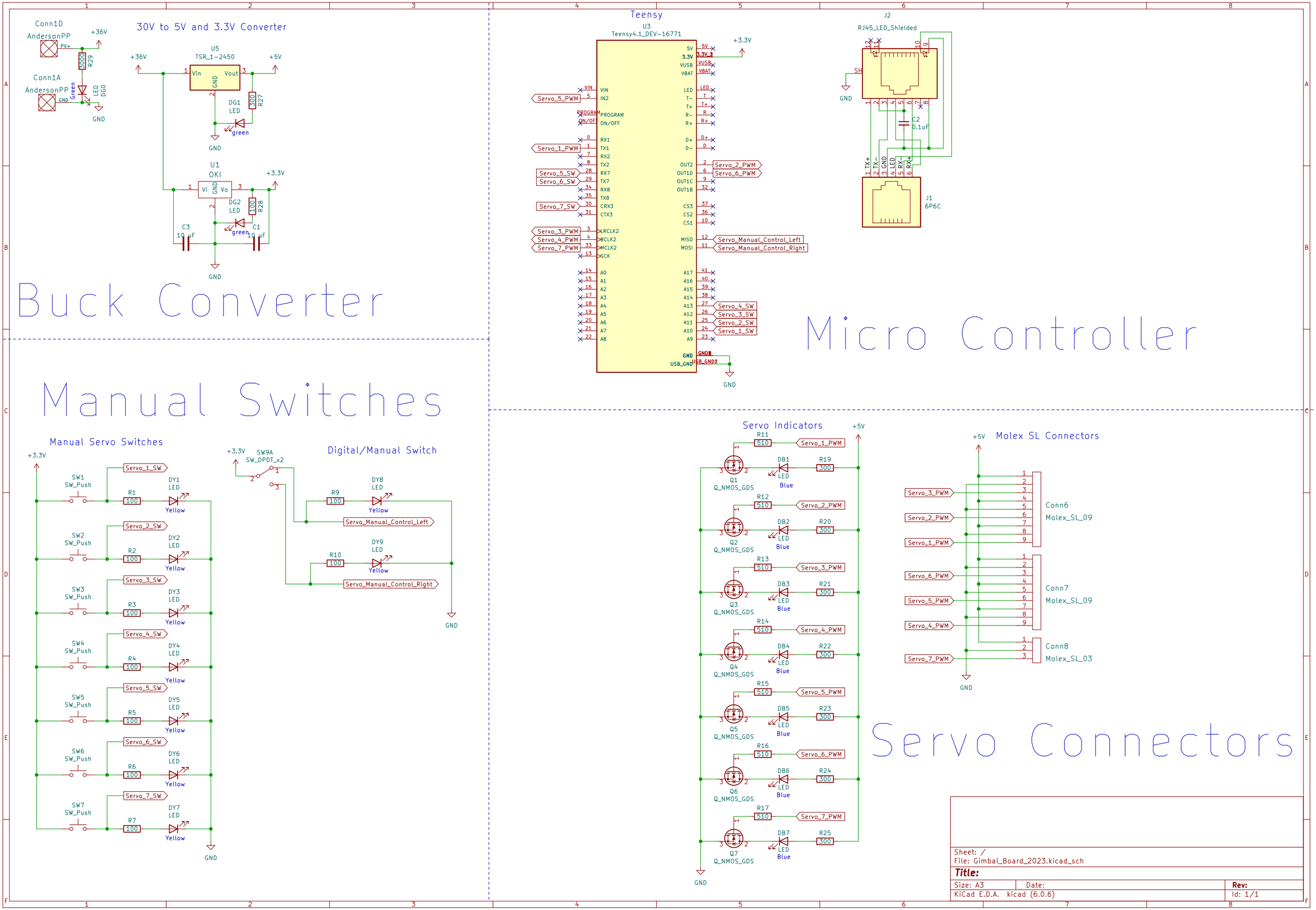

Buck Converter
30V to 5V and 3.3V Converter
Conn1D
AndersonPP
Conn1A
AndersonPP
+36V
R29
3000
Green
LED
DG0
GND
U5
TSR_1-2450
Vin
Vout
GND
+5V
DG1
LED
R27
300
green
U1
OKI
Vi
Vo
+3.3V
DG2
LED
R28
100
C3
10 uF
C1
10 uF
Teensy
U3
Teensy4.1_DEV-16771
+3.3V
Servo_5_PWM
Servo_1_PWM
Servo_5_SW
Servo_6_SW
Servo_7_SW
Servo_3_PWM
Servo_4_PWM
Servo_7_PWM
Servo_2_PWM
Servo_6_PWM
Servo_Manual_Control_Left
Servo_Manual_Control_Right
Servo_4_SW
Servo_3_SW
Servo_2_SW
Servo_1_SW
J2
RJ45_LED_Shielded
C2
0.1uF
J1
6P6C
Micro Controller
Manual Switches
Manual Servo Switches
+3.3V
SW1
SW_Push
SW2
SW_Push
SW3
SW_Push
SW4
SW_Push
SW5
SW_Push
SW6
SW_Push
SW7
SW_Push
Servo_1_SW
Servo_2_SW
Servo_3_SW
Servo_4_SW
Servo_5_SW
Servo_6_SW
Servo_7_SW
R1
R2
R3
R4
R5
R6
R7
100
DY1
DY2
DY3
DY4
DY5
DY6
DY7
LED
Yellow
GND
Digital/Manual Switch
+3.3V
SW9A
SW_DPDT_x2
R9
R10
DY8
DY9
Servo_Manual_Control_Left
Servo_Manual_Control_Right
Servo Indicators
+5V
R11
R12
R13
R14
R15
R16
R17
510
Q1
Q2
Q3
Q4
Q5
Q6
Q7
Q_NMOS_GDS
DB1
DB2
DB3
DB4
DB5
DB6
DB7
LED
Blue
R19
R20
R21
R22
R23
R24
R25
300
Molex SL Connectors
Conn6
Molex_SL_09
Conn7
Molex_SL_09
Conn8
Molex_SL_03
Servo Connectors
Sheet: /
File: Gimbal_Board_2023.kicad_sch
Title:
Size: A3
Date:
Rev:
KiCad E.D.A. kicad (6.0.6)
Id: 1/1