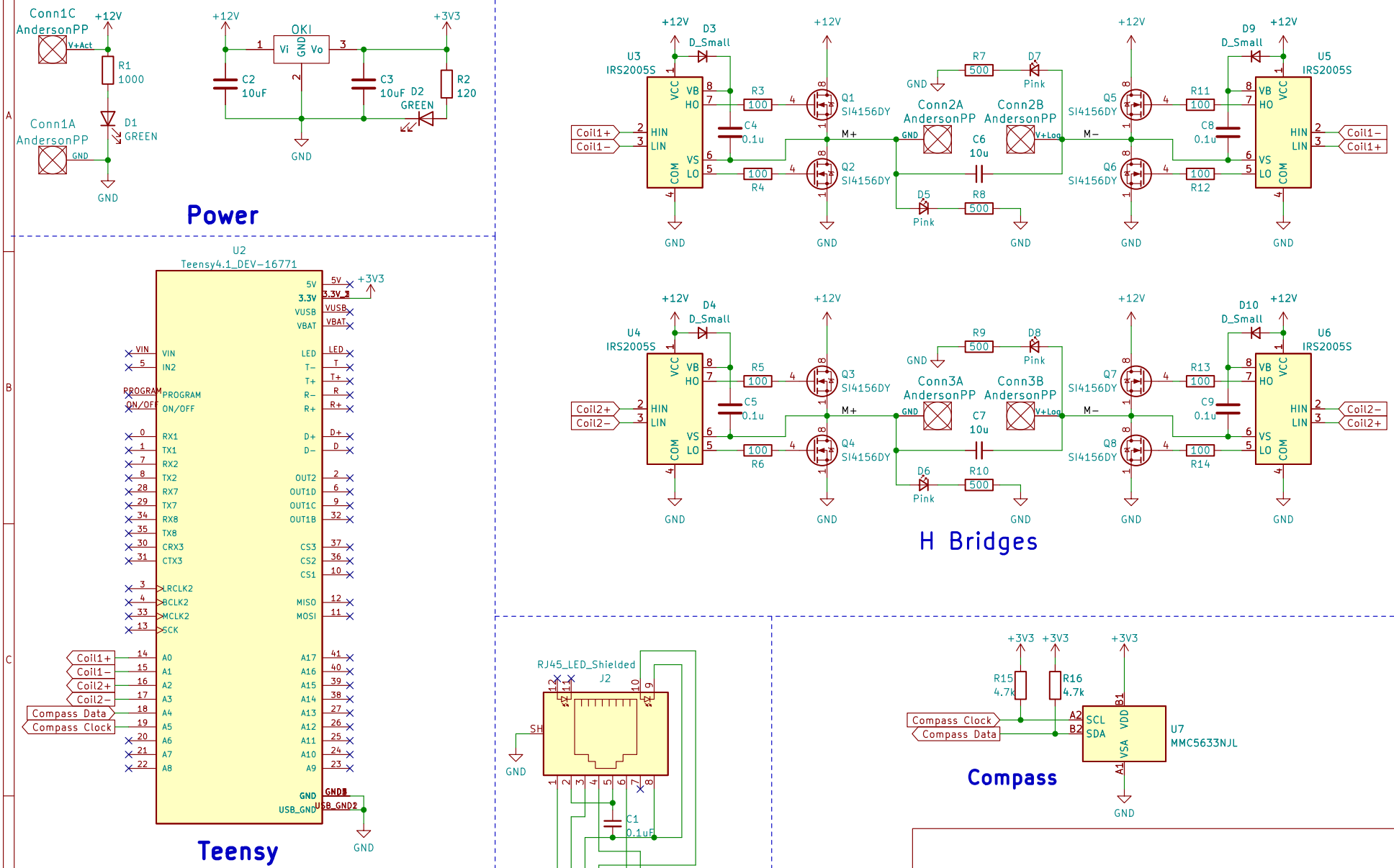
Power
Conn1C AndersonPP
Conn1A AndersonPP
+12V
R1 1000
D1 GREEN
GND
OKI
Vi Vo GND
C2 10uF
C3 10uF
+3V3
R2 120
D2 GREEN
H Bridges
U3 IRS2005S
U4 IRS2005S
U5 IRS2005S
U6 IRS2005S
D3 D_Small
D4 D_Small
D9 D_Small
D10 D_Small
R3 100
R4 100
R5 100
R6 100
R7 500
R8 500
R9 500
R10 500
R11 100
R12 100
R13 100
R14 100
C4 0.1u
C5 0.1u
C6 10u
C7 10u
C8 0.1u
C9 0.1u
Q1 SI4156DY
Q2 SI4156DY
Q3 SI4156DY
Q4 SI4156DY
Q5 SI4156DY
Q6 SI4156DY
Q7 SI4156DY
Q8 SI4156DY
D5 Pink
D6 Pink
D7 Pink
D8 Pink
Conn2A AndersonPP
Conn2B AndersonPP
Conn3A AndersonPP
Conn3B AndersonPP
Coil1+
Coil1−
Coil2+
Coil2−
M+
M−
Teensy
U2 Teensy4.1_DEV−16771
Compass Data
Compass Clock
Ethernet
RJ45_LED_Shielded J2
J1 Molex_uF_SV_06
C1 0.1uF
Compass
U7 MMC5633NJL
R15 4.7k
R16 4.7k
SCL
SDA
Mars Rover Design Team
Sheet: /
File: SignalStack_Board.kicad_sch
Title: Signal Stack Board
Size: A4
Date:
Rev:
KiCad E.D.A. kicad (6.0.7)
Id: 1/1