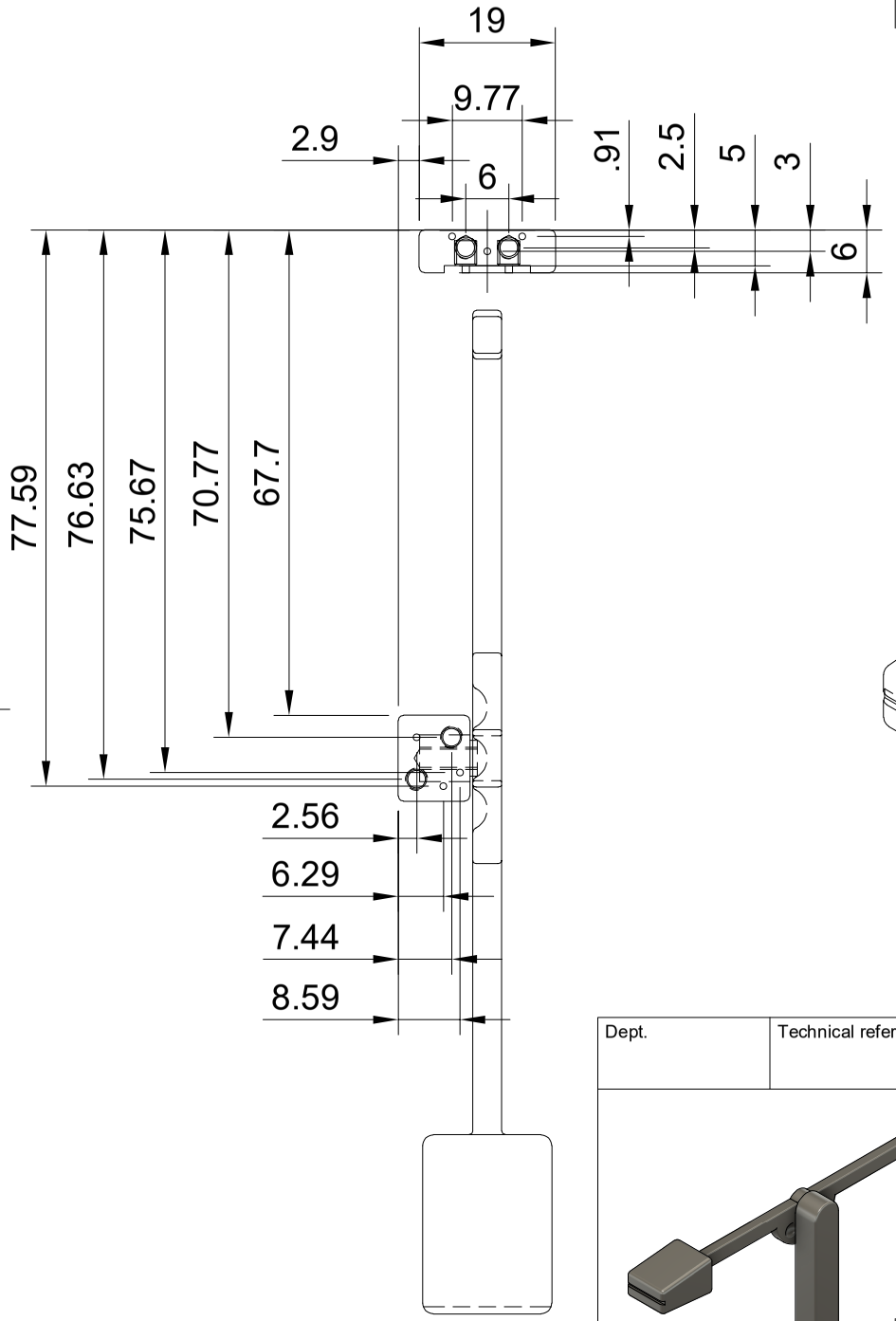

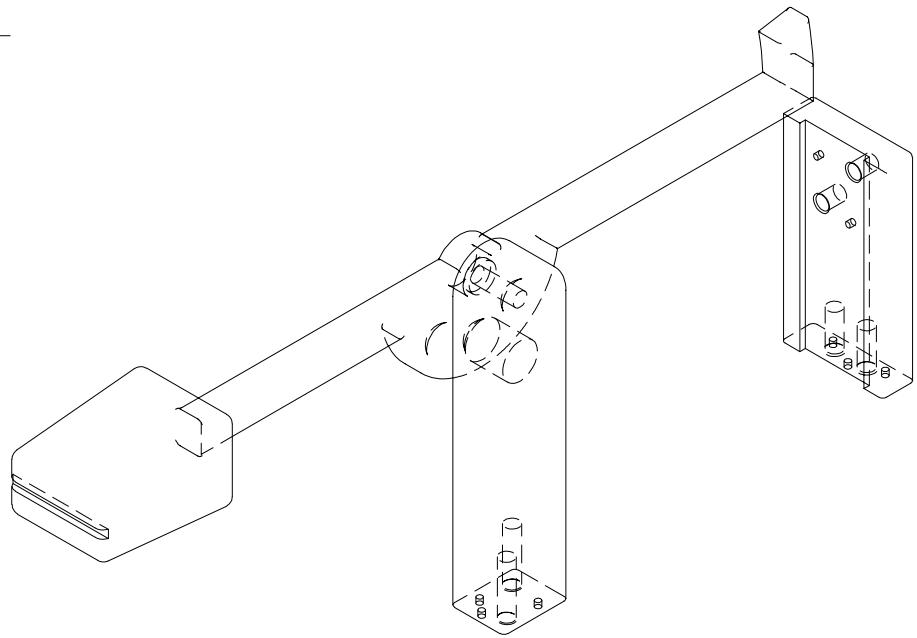

Dept.	Technical reference	Created by Adrian Helfer 01.06.25	Approved by	
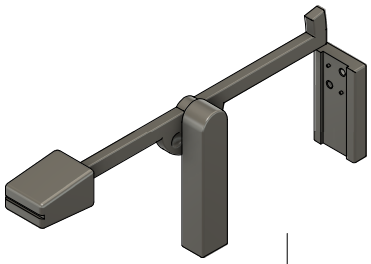		Document type	Document status	
		Title Flip Lever Baugruppe	DWG No.	
			Rev. / Date of issue	Sheet 1/1