FORDATA
FOR DATA DISPLAY

Classic LCDs & LEDs

LCD MODULE

COB(Chip On Board) SERIES

On - line catalogue (V6.0)
www.fordata.cn

Copyright©2015 FORDATA electronic co., Ltd. All rights reserved.

FORDATA ELECTRONIC CO.,LTD
PROFESSIONAL LCD SUPPLIER FROM CHINA

USAGE GUIDE

ITEM NUMBER	DISPLAY FORMAT	OVERALL SIZE
FDCC0801A	HR. X 1LINE	84.0X44.0
FDCC0801B	8CHR. X 1LINE	69.0X27.0
FDCC0802B	8CHR. X 2LINES	58.0X32.0
FDCC0802C	8CHR. X 2LINES	40.0X35.4
FDCC1601A	16CHR. X 1LINE	151.0X40.0
FDCC1601B	16CHR. X 1LINE	122.0X33.0

Click the item number in the list to get to the right page of products.

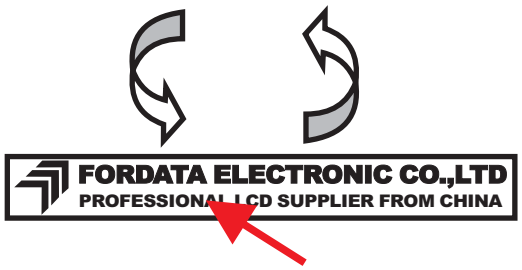

Click the logo on the up-left corner of each page to return.

Print out the PDF pages.

Load the printed pages into the document bags for a complete catalgue

FORDATA ELECTRONIC CO.,LTD
PROFESSIONAL LCD SUPPLIER FROM CHINA

NUMBER SYSTEM

1	2	3	4	5	6	—	7	8	9	10	11	12	—	13	14	15	16
F	C	08	01	A	23	—	F	S	Y	Y	B	W	—	5	2	L	E

No.	REMARKS	DESCRIPTION
1	COMPANY ABBRAVIATED	F = FORDATA
2	STANDARD MODULE TYPE	C = Character type standard LCD module (COB version) G = Graphic type standard LCD module (COB version)
3	Character (FC series)	08, 10, 12, 16, 20, 24, 40, = Character number Per line
	Graphic (FG series)	80, 100, 120, 122, 128, 160 ... ... = Row Dots Quantity
4	Character (FC series)	01, 02, 04, = Character Lines
	Graphic (FG series)	32, 64, 80, 128, 160 ... ... =Column Dots Quantity
5	Serial Number	A~Z which is decided by the sizes of viewing area
6	Identifying Code	00~99 which is decided by all the other aspects for the same viewing area
7	Polarizer type	R = Positive Reflective M = Positive Transmissive B = Super Black technology New! F = Positive Transflective N = Negative Transmissive
8	Backlight type	N = No Backlight S = Edge Type LED Backlight (Standard version) H = Edge Type LED Backlight (Long life span version) New! E = EL backlight without Invertor C = CCFL backlight without Invertor L = Array Type LED Backlight F = EL backlight with Invertor T = CCFL backlight with Invertor
9	Backlight color	N = No Backlight R = Red B = Blue Y = Yellow-Green A = Amber G = Green W = White C = Blue-Green Q = RedGreenBlue three color New!
10	LCD panel type	T = TN G = Gray STN H = HTN B = Blue STN Y = Yellow-Green STN F = FSTN
11	Viewing angle	B = Bottom 6:00 T = Top 12:00 R = Right 3:00 L = Left 9:00
12	Operation temperature range	S = 0℃ ~ 50℃ (Single Supply Voltage) W = -20℃ ~ 70℃ (Single Supply Voltage) T = -30℃ ~ 80℃ (Single Supply Voltage) D = 0℃ ~ 50℃ (Dual Supply Voltage) H = -20℃ ~ 70℃ (Dual Supply Voltage) E = -30℃ ~ 80℃ (Dual Supply Voltage)
13	Driving Voltage Code (This code was updated from 2015-JAN-1ST)	

	Vlcm=3. 0V	Vlcm=3. 3V	Vlcm=3. 6V	Vlcm=5.0V
Vled=3. 0V	9	A	3	4
Vled=3. 3V	T	B	K	F
Vled=4. 2V	9	A	3	4
Vled=5. 0V	8	C	2	5
NO/EL/CCFL	1	N	7	6

14	Backlight Connect Method	0 = PIN1 LED-, PIN2 LED+ 1 = PIN15(17/19) LED+, PIN16(18/20) LED- 2 = PIN15(17/19) LED-, PIN16(18/20) LED+ 3 = PIN15(17/19) LED+, PIN16(18/20) NC 4 = PIN15(17/19) NC, PIN16(18/20) LED+ 5 = PINA LED+, PINK LED- 6 = No / EL / CCFL Backlight
15	IC Manufacturer Code	A~Z or 01~99 which is decided by different IC manufacturers
16	Font Set	A~Z or 01~99 which is decided by different font maps

FORDATA ELECTRONIC CO.,LTD
PROFESSIONAL LCD SUPPLIER FROM CHINA

COB SERIES

CHARACTER TYPE LCD MODULE

ITEM NUMBER	DISPLAY FORMAT	OVERALL SIZE	VIEWING AREA	HOLE-HOLE	CHARACTER SIZE	DOT SIZE	DUTY
FDCC0801A	8CHR. X 1LINE	84.0X44.0	61.0X15.8	79.0X36.0	6.45X10.75	1.25X1.30	1/8
FDCC0801B	8CHR. X 1LINE	69.0X27.0	45.2X13.8	65.40	4.20X7.71	0.80X0.92	1/8
FDCC0802B	8CHR. X 2LINES	58.0X32.0	38.0X16.0	53.0X27.0	2.96X5.56	0.56X0.66	1/16
FDCC0802C	8CHR. X 2LINES	40.0X35.4	30.4X13.9	36.0X30.9	2.95X4.75	0.55X0.55	1/16
FDCC1601A	16CHR. X 1LINE	151.0X40.0	120.0X23.0	143.0X32.0	6.00X14.54	1.152X1.765	1/16
FDCC1601B	16CHR. X 1LINE	122.0X33.0	99.0X13.0	115.0X25.0	4.84X9.22	0.92X1.10	1/16
FDCC1601E	16CHR. X 1LINE	80.0X36.0	64.0X13.8	75.0X31.0	3.07X6.56	0.55X0.75	1/16
FDCC1602A	16CHR. X 2LINES	122.0X44.0	99.0X24.0	115.0X37.0	5.20X9.55	1.00X1.15	1/16
FECC1602B	16CHR. X 2LINES	85.0X36.0	63.0X16.4	80.0X31.0	3.00X5.23	0.56X0.61	1/16
FECC1602C	16CHR. X 2LINES	85.0X32.6	64.5X16.4	79.0X29.2	3.00X5.23	0.56X0.61	1/16
FECC1602D	16CHR. X 2LINES	85.0X29.5	64.5X16.4	81.0X24.0	3.00X5.23	0.56X0.61	1/16
FECC1602E	16CHR. X 2LINES	84.0X44.0	64.5X16.4	79/76X36.0	3.00X5.23	0.56X0.61	1/16
FECC1602G	16CHR. X 2LINES	80.0X36.0	64.5X16.4	75.0X31.0	3.00X5.23	0.56X0.61	1/16
FDCC1602L	16CHR. X 2LINES	65.5X36.7	54.0X14.4	60.5X31.7	2.55X4.99	0.47X0.58	1/16
FDCC1602N	16CHR. X 2LINES	80.0X36.0	64.0X13.8	75.0X31.0	2.95X4.35	0.55X0.50	1/16
FDCC1602P	16CHR. X 2LINES	122.0X44.0	99.0X24.0	115.0X37.0	4.84X9.66	0.92X1.10	1/16
FDCC1604A	16CHR. X 4LINES	87.0X60.0	61.8X25.2	82.0X55.0	2.95X4.75	0.55X0.55	1/16
FDCC2002C	20CHR. X 2LINES	146.0X43.0	123.0X23.0	139.0X36.0	4.84X9.22	0.92X1.10	1/16
FDCC2002D	20CHR. X 2LINES	116.0X37.0	83.0X18.6	108.0X29.0	3.20X5.95	0.60X0.65	1/16
FDCC2004B	20CHR. X 4LINES	98.0X60.0	76.0X25.2	93.0X55.0	2.95X4.75	0.55X0.55	1/16
FDCC2004C	20CHR. X 4LINES	77.0X47.0	60.0X22.0	70.0X40.0	2.30X4.03	0.42X0.46	1/16
FDCC2004D	20CHR. X 4LINES	146.0X62.5	123.0X42.5	139.0X55.5	4.84X9.22	0.92X1.10	1/16
FDCC2004F	20CHR. X 4LINES	98.0X60.0	76.0X26.0	93.0X55.0	2.95X4.75	0.55X0.55	1/16
FDCC2402E	24CHR. X 2LINES	116.0X37.0	83.0X18.6	108.0X29.0	2.70X5.55	0.50X0.65	1/16
FDCC4002B	40CHR. X 2LINES	182.0X33.5	152.5X16.5	175.0X26.5	3.20X5.55	0.60X0.65	1/16
FDCC4004A	40CHR. X 4LINES	190.0X54.0	147.0X29.5	183.0X47.0	2.78X4.89	0.50X0.55	1/16

GRAPHIC TYPE LCD MODULE

ITEM NUMBER	DISPLAY FORMAT	MODULE SIZE	VIEWING AREA	HOLE-HOLE	DOT SIZE	DUTY	CONTROLLER
FDCG12232D	122X32 Dot Matrix	84.0X44.0	64.0X17.9	79.5/76.0X36.0	0.40X0.45	1/32	SED1520D0A
FDCG12232G	122X32 Dot Matrix	84.0X44.0	64.0X17.9	76.0X36.0	0.40X0.45	1/32	SED1520DAA
FDCG12864B	128X64 Dot Matrix	93.0X70.0	72.0X40.0	88.0X64.0	0.48X0.48	1/64	KS0108B
FDCG12864E	128X64 Dot Matrix	78.0X70.0	62.0X44.0	68.0X65.0	0.40X0.56	1/64	KS0108B
FDCG12864G	128X64 Dot Matrix	87.0X71.0	62.0X44.0	75.0X67.0	0.40X0.56	1/64	KS0108B
FDCG12864H	128X64 Dot Matrix	75.0X52.7	60.0X32.5	70.0X49.7	0.39X0.39	1/64	KS0108B
FDCG12864K	128X64 Dot Matrix	78.0X70.0	62.0X44.0	68.0X65.0	0.40X0.56	1/64	T6963C
FDCG12864N	128X64 Dot Matrix	75.0X52.7	60.0X32.5	70.0X49.7	0.39X0.39	1/64	T6963C
FECG24064B	240X64 Dot Matrix	180.0X65.0	134.0X40.4	176.0X54.0	0.49X0.49	1/64	T6963C
FDCG128128A	128X128 Dot Matrix	92.0X106.0	73.0X73.0	85.0X99.0	0.50X0.50	1/128	T6963C
FECG240128A	240X128 Dot Matrix	144.0X104.0	114.0X64.0	138.0X97.0	0.40X0.40	1/128	T6963C

FORDATA ELECTRONIC CO.,LTD

PROFESSIONAL LCD SUPPLIER FROM CHINA

FDCC0801A

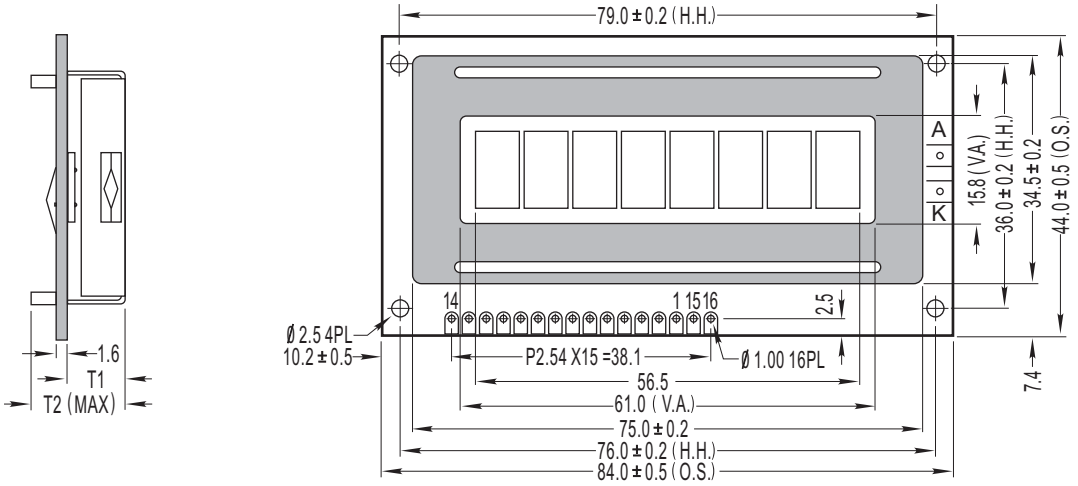

* O.S.=Overall Size
* V.A.=Viewing Area
* H.H.=Hole -Hole

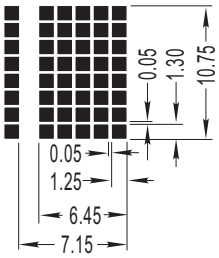

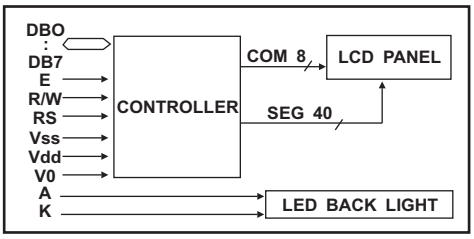

ITEM	T1	T2	UNIT
LED backlight	8.6	13.5	mm
EL or without backlight	4.7	10.0	mm

FEATURE

1. 5X8 dots with cursor
2. Built- in controller (SPLC780D or Equivalent)
3. +5V power supply (Also available for +3.0V)
4. 1/8 duty cycle
5. BKL to be driven by pin1,pin2,or pin15,pin16 or A,K
6. N.V. Optional

ABSOLUTE MAXIMUM RATINGS

ITEM	SYMBOL	MIN	MAX	UNIT
POWER SUPPLY (LOGIC)	Vdd	-0.3	7.0	V
POWER SUPPLY (LCD)	V0	Vdd -13.5	Vdd +0.3	V
INPUT VOLTAGE	Vin	-0.3	Vdd +0.3	V

PIN ASSIGNMENT

PIN	SYMBOL	FUNCTION
1	Vss	GND
2	Vdd	Power Supply
3	V0	Contrast Adjust
4	RS	Register Select Signal
5	R/W	Data Read/Write
6	E	Enable Signal
7-14	DB0-DB7	Data Bus Line
15(A)	LED+	Power supply for BKL(+)
16(K)	LED-	Power supply for BKL(-)

MECHANICAL SPECIFICATIONS

CHARACTER NUMBER	8W X 1H	—
OVERALL SIZE	84.00W X 44.00H	mm
VIEWING AREA	61.00W X 15.80H	mm
HOLE - HOLE	79.00W X 36.00H	mm
CHARACTER SIZE	6.45W X 10.75H	mm
CHARACTER PITCH	0.70W	mm
DOT SIZE	1.25W X 1.30H	mm
DOT PITCH	0.05W X 0.05H	mm

ELECTRONICAL CHARACTERISTICS

ITEM	SYMBOL	CONDITION	STANDARD			UNIT
			MIN	TYP	MAX	
Input voltage	Vdd	+5V	4.7	5.0	5.5	V
		+3.3V	2.7	3.0	3.3	V
Supply current	Idd	Vdd=5V	---	1.3	2.5	mA
Recommended LCD driving voltage for normal temp version module	Vdd-V0	0 °C	4.7	5.0	5.5	V
		25 °C	4.3	4.5	4.7	
		50 °C	4.1	4.3	4.5	
LED forward voltage	V_F	25 °C	---	4.2	4.6	V
LED forward current	I_F	25 °C	---	70	---	mA
EL power supply current	EL	AC 400Hz V_{EL} =110V	----	---	---	mA

DISPLAY CHARACTER ADDRESS CODE

Display position	*1 2 3 4 5 6 7 8*
DDRAM address	*00 01 02 -- -- -- 07*

FORDATA ELECTRONIC CO.,LTD

PROFESSIONAL LCD SUPPLIER FROM CHINA

FDCC0801B

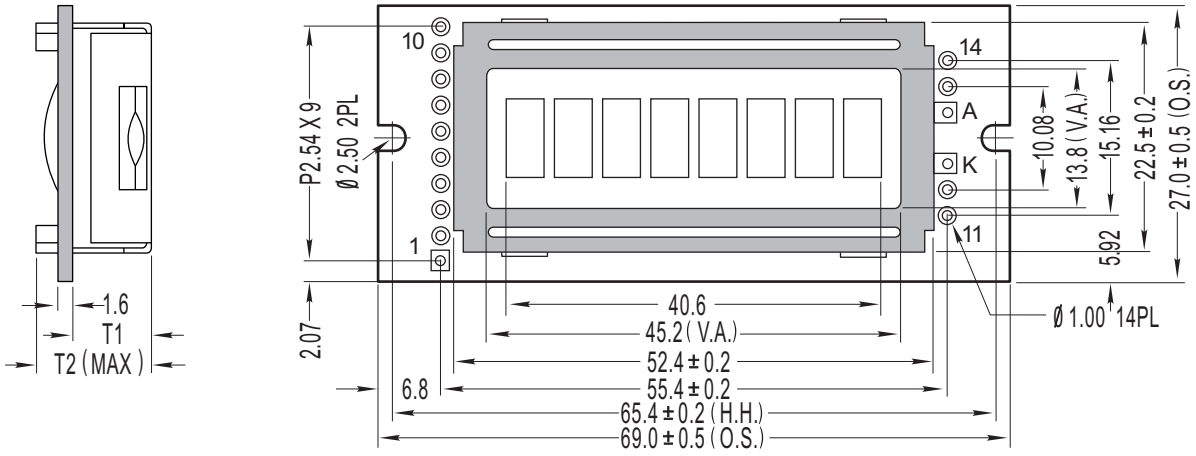

* O.S.=Overall Size
* V.A.=Viewing Area
* H.H.=Hole -Hole

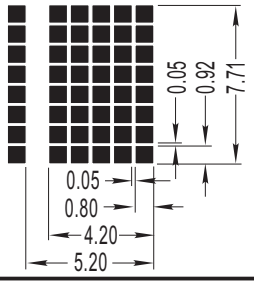

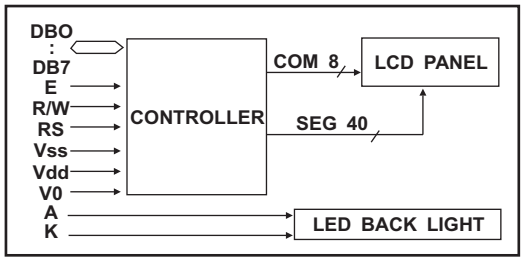

ITEM	T1	T2	UNIT
LED backlight	8.6	13.0	mm
EL or without backlight	4.0	8.0	mm

FEATURE

1. 5X8 dots with cursor
2. Built- in controller (SPLC780D or Equivalent)
3. +5V power supply (Also available for +3.0V)
4. 1/8 duty cycle
5. BKL to be driven by pin1,pin2 or A,K
6. N.V. Optional

ABSOLUTE MAXIMUM RATINGS

ITEM	SYMBOL	MIN	MAX	UNIT
POWER SUPPLY (LOGIC)	Vdd	-0.3	7.0	V
POWER SUPPLY (LCD)	V0	Vdd -13.5	Vdd +0.3	V
INPUT VOLTAGE	Vin	-0.3	Vdd +0.3	V

PIN ASSIGNMENT

PIN	SYMBOL	FUNCTION
1	Vss	GND
2	Vdd	Power Supply
3	V0	Contrast Adjust
4	RS	Register Select Signal
5	R/W	Data Read/Write
6	E	Enable Signal
7-14	DB0-DB7	Data Bus Line
A	LED+	Power supply for BKL(+)
K	LED-	Power supply for BKL(-)

MECHANICAL SPECIFICATIONS

CHARACTER NUMBER	8W X 1H	—
OVERALL SIZE	69.00W X 27.00H	mm
VIEWING AREA	45.20W X 13.80H	mm
HOLE - HOLE	65.40W	mm
CHARACTER SIZE	4.20W X 7.71H	mm
CHARACTER PITCH	1.00W	mm
DOT SIZE	0.80W X 0.92H	mm
DOT PITCH	0.05W X 0.05H	mm

ELECTRONICAL CHARACTERISTICS

ITEM	SYMBOL	CONDITION	STANDARD			UNIT
			MIN	TYP	MAX	
Input voltage	Vdd	+5V	4.7	5.0	5.5	V
		+3.3V	2.7	3.0	3.3	V
Supply current	Idd	Vdd=5V	---	1.3	2.5	mA
Recommended LCD driving voltage for normal temp version module	Vdd-V0	0 °C	4.7	5.0	5.5	V
		25 °C	4.3	4.5	4.7	
		50 °C	4.1	4.3	4.5	
LED forward voltage	V_F	25 °C	---	4.2	4.6	V
LED forward current	I_F	25 °C	---	70	---	mA
EL power supply current	EL	AC 400Hz V_{EL} =110V	----	---	---	mA

DISPLAY CHARACTER ADDRESS CODE

Display position	*1 2 3 4 5 6 7 8*
DDRAM address	*00 01 02 -- -- -- 07*

FORDATA ELECTRONIC CO.,LTD

PROFESSIONAL LCD SUPPLIER FROM CHINA

FDCC0802B

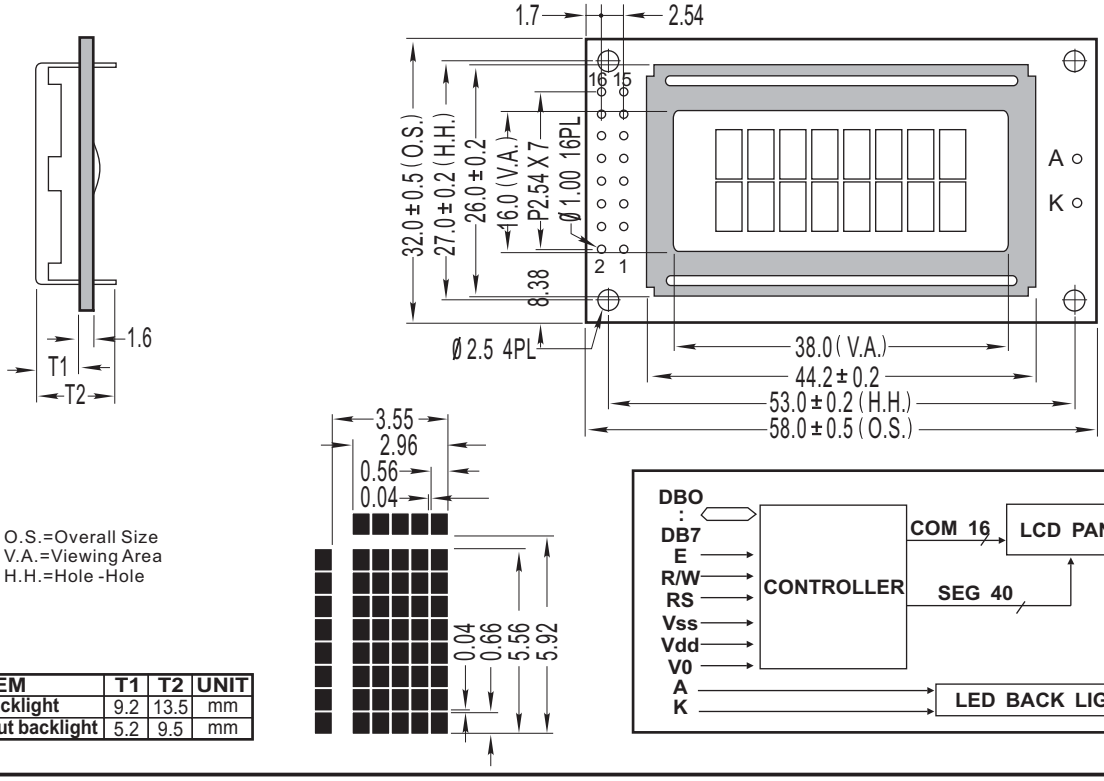

* O.S.=Overall Size
* V.A.=Viewing Area
* H.H.=Hole -Hole

ITEM	T1	T2	UNIT
LED backlight	9.2	13.5	mm
EL or without backlight	5.2	9.5	mm

FEATURE

1. 5X8 dots with cursor
2. Built- in controller (SPLC780D or Equivalent)
3. +5V power supply (Also available for +3.0V)
4. 1/16 duty cycle
5. BKL to be driven by pin1,pin2 or A,K
6. N.V. Optional

ABSOLUTE MAXIMUM RATINGS

ITEM	SYMBOL	MIN	MAX	UNIT
POWER SUPPLY (LOGIC)	Vdd	-0.3	7.0	V
POWER SUPPLY (LCD)	V0	Vdd -13.5	Vdd +0.3	V
INPUT VOLTAGE	Vin	-0.3	Vdd +0.3	V

PIN ASSIGNMENT

PIN	SYMBOL	FUNCTION
1	Vss	GND
2	Vdd	Power Supply
3	V0	Contrast Adjust
4	RS	Register Select Signal
5	R/W	Data Read/Write
6	E	Enable Signal
7-14	DB0-DB7	Data Bus Line
A	LED+	Power supply for BKL(+)
K	LED-	Power supply for BKL(-)

MECHANICAL SPECIFICATIONS

CHARACTER NUMBER	8W X 2H	—
OVERALL SIZE	58.00W X 32.00H	mm
VIEWING AREA	38.00W X 16.00H	mm
HOLE - HOLE	53.00WX27.00H	mm
CHARACTER SIZE	2.96W X 5.56H	mm
CHARACTER PITCH	0.59WX0.36H	mm
DOT SIZE	0.56W X 0.66H	mm
DOT PITCH	0.04W X 0.04H	mm

ELECTRONICAL CHARACTERISTICS

ITEM	SYMBOL	CONDITION	STANDARD			UNIT
			MIN	TYP	MAX	
Input voltage	Vdd	+5V	4.7	5.0	5.5	V
		+3.3V	2.7	3.0	3.3	V
Supply current	Idd	Vdd=5V	---	1.3	2.5	mA
Recommended LCD driving voltage for normal temp version module	Vdd-V0	0 °C	4.7	5.0	5.5	V
		25 °C	4.3	4.5	4.7	
		50 °C	4.1	4.3	4.5	
LED forward voltage	V_F	25 °C	---	4.2	4.6	V
LED forward current	I_F	25 °C	---	70	---	mA
EL power supply current	EL	AC 400Hz V_{EL} =110V	----	---	---	mA

DISPLAY CHARACTER ADDRESS CODE

Display position	1	2	3	4	5	6	7	8
DDRAM address	00	01	02	--	--	--	--	07
DDRAM address	40	41	42	--	--	--	--	47

FORDATA ELECTRONIC CO.,LTD

PROFESSIONAL LCD SUPPLIER FROM CHINA

FDCC0802C

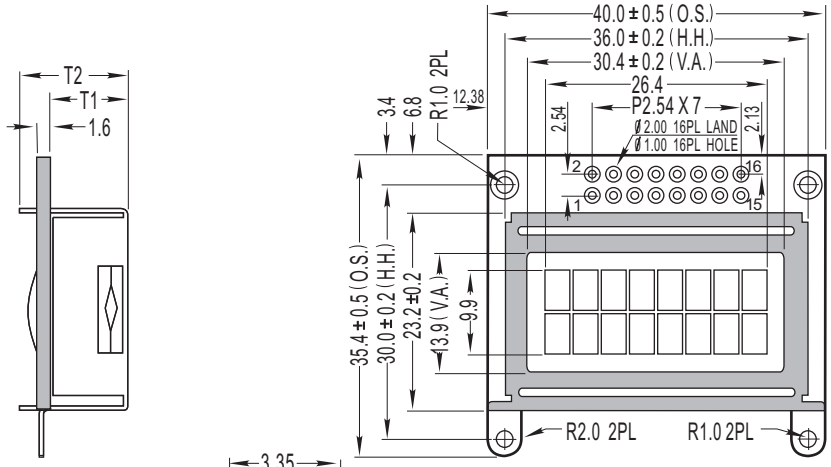

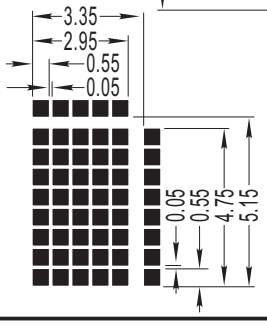

* O.S.=Overall Size
* V.A.=Viewing Area
* H.H.=Hole -Hole

ITEM	T1	T2	UNIT
LED backlight	9.0	13.0	mm
EL or without backlight	3.7	8.5	mm

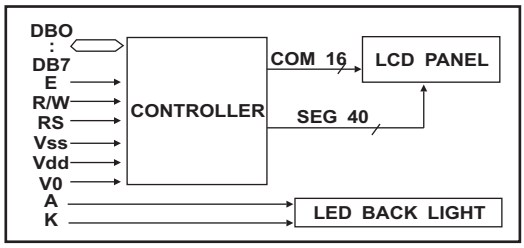

FEATURE

1. 5X8 dots with cursor
2. Built- in controller (SPLC780D or Equivalent)
3. +5V power supply (Also available for +3.0V)
4. 1/16 duty cycle
5. BKL to be driven by pin15,pin16
6. N.V. Optional

MECHANICAL SPECIFICATIONS

CHARACTER NUMBER	8W X 2H	—
OVERALL SIZE	40.00W X 35.40H	mm
VIEWING AREA	30.40W X 13.90H	mm
HOLE - HOLE	36.00WX30.90H	mm
CHARACTER SIZE	2.95W X 4.75H	mm
CHARACTER PITCH	0.40WX0.40H	mm
DOT SIZE	0.55W X 0.55H	mm
DOT PITCH	0.05W X 0.05H	mm

ABSOLUTE MAXIMUM RATINGS

ITEM	SYMBOL	MIN	MAX	UNIT
POWER SUPPLY (LOGIC)	Vdd	-0.3	7.0	V
POWER SUPPLY (LCD)	V0	Vdd -13.5	Vdd +0.3	V
INPUT VOLTAGE	Vin	-0.3	Vdd +0.3	V

ELECTRONICAL CHARACTERISTICS

ITEM	SYMBOL	CONDITION	STANDARD			UNIT
			MIN	TYP	MAX	
Input voltage	Vdd	+5V	4.7	5.0	5.5	V
		+3.3V	2.7	3.0	3.3	V
Supply current	Idd	Vdd=5V	---	1.3	2.5	mA
Recommended LCD driving voltage for normal temp version module	Vdd-V0	0 °C	4.7	5.0	5.5	V
		25 °C	4.3	4.5	4.7	
		50 °C	4.1	4.3	4.5	
LED forward voltage	V_F	25 °C	---	4.2	4.6	V
LED forward current	I_F	25 °C	---	70	---	mA
EL power supply current	EL	AC 400Hz V_{EL} =110V	----	---	---	mA

PIN ASSIGNMENT

PIN	SYMBOL	FUNCTION
1	Vss	GND
2	Vdd	Power Supply
3	V0	Contrast Adjust
4	RS	Register Select Signal
5	R/W	Data Read/Write
6	E	Enable Signal
7-14	DB0-DB7	Data Bus Line
15	LED+	Power supply for BKL(+)
16	LED-	Power supply for BKL(-)

DISPLAY CHARACTER ADDRESS CODE

Display position	*1 2 3 4 5 6 7 8*
DDRAM address	*00 01 02 -- -- -- 07*
DDRAM address	*40 41 42 -- -- -- 47*

FORDATA ELECTRONIC CO.,LTD

PROFESSIONAL LCD SUPPLIER FROM CHINA

FDCC1601A

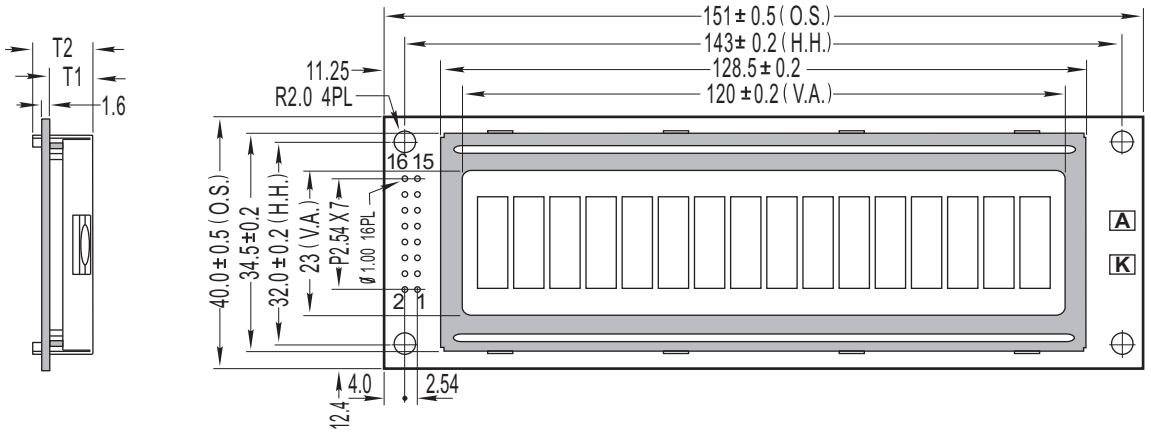

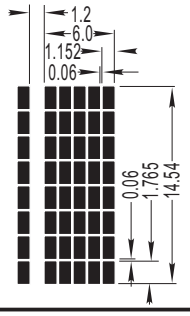

* O.S.=Overall Size
* V.A.=Viewing Area
* H.H.=Hole -Hole

ITEM	T1	T2	UNIT
LED backlight	8.6	13.5	mm
EL or without backlight	5.0	9.5	mm

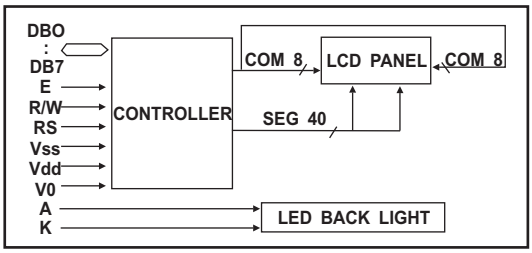

FEATURE

1. 5X8 dots with cursor
2. Built- in controller (SPLC780D or Equivalent)
3. +5V power supply (Also available for +3.0V)
4. 1/16 duty cycle
5. BKL to be driven by pin1,pin2,or pin15,pin16 or A,K
6. N.V. Optional

ABSOLUTE MAXIMUM RATINGS

ITEM	SYMBOL	MIN	MAX	UNIT
POWER SUPPLY (LOGIC)	Vdd	-0.3	7.0	V
POWER SUPPLY (LCD)	V0	Vdd -13.5	Vdd +0.3	V
INPUT VOLTAGE	Vin	-0.3	Vdd +0.3	V

PIN ASSIGNMENT

PIN	SYMBOL	FUNCTION
1	Vss	GND
2	Vdd	Power Supply
3	V0	Contrast Adjust
4	RS	Register Select Signal
5	R/W	Data Read/Write
6	E	Enable Signal
7-14	DB0-DB7	Data Bus Line
15(A)	LED+	Power supply for BKL(+)
16(K)	LED-	Power supply for BKL(-)

MECHANICAL SPECIFICATIONS

CHARACTER NUMBER	16W X 1H	—
OVERALL SIZE	151.00W X 40.00H	mm
VIEWING AREA	120.00W X 23.00H	mm
HOLE - HOLE	143.00W X 32.00H	mm
CHARACTER SIZE	6.00W X 14.54H	mm
CHARACTER PITCH	1.20W	mm
DOT SIZE	1.152W X 1.765H	mm
DOT PITCH	0.06W X 0.06H	mm

ELECTRONICAL CHARACTERISTICS

ITEM	SYMBOL	CONDITION	STANDARD			UNIT
			MIN	TYP	MAX	
Input voltage	Vdd	+5V	4.7	5.0	5.5	V
		+3.3V	2.7	3.0	3.3	V
Supply current	Idd	Vdd=5V	---	2.0	4.0	mA
Recommended LCD driving voltage for normal temp version module	Vdd-V0	0 °C	4.7	5.0	5.5	V
		25 °C	4.3	4.5	4.7	
		50 °C	4.1	4.3	4.5	
LED forward voltage	V_F	25 °C	---	4.2	4.6	V
LED forward current	I_F	25 °C	---	300	---	mA
EL power supply current	EL	AC 400Hz V_{EL} =110V	----	---	---	mA

DISPLAY CHARACTER ADDRESS CODE

Display position	1	2	3	4	5	6	7	8	9	10	11	12	13	14	15	16
DDRAM address	00	01	02	--	--	--	07	40	41	42	--	--	--			47

FORDATA ELECTRONIC CO.,LTD

PROFESSIONAL LCD SUPPLIER FROM CHINA

FDCC1601B

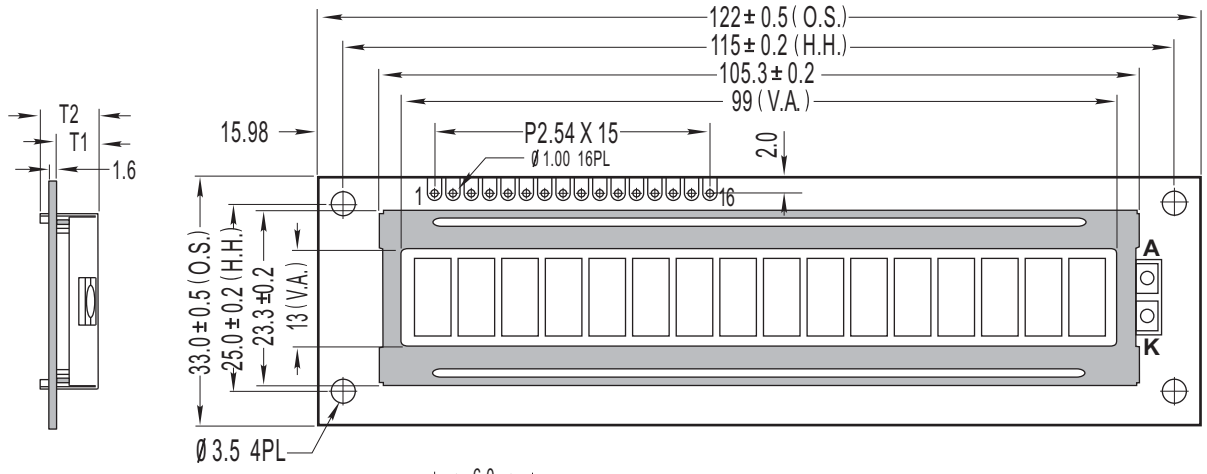

* O.S.=Overall Size
* V.A.=Viewing Area
* H.H.=Hole -Hole

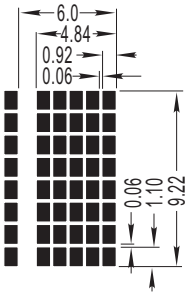

ITEM	T1	T2	UNIT
LED backlight	9.8	15.2	mm
EL or without backlight	4.5	9.5	mm

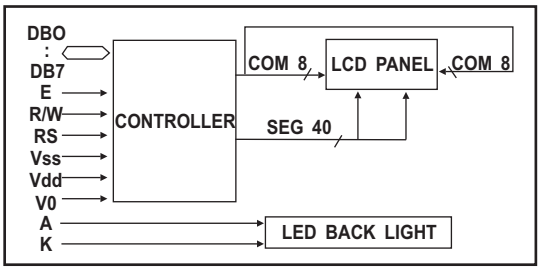

FEATURE

1. 5X8 dots with cursor
2. Built- in controller (SPLC780D or Equivalent)
3. +5V power supply (Also available for +3.0V)
4. 1/16 duty cycle
5. BKL to be driven by pin1,pin2,or pin15,pin16 or A,K
6. N.V. Optional

ABSOLUTE MAXIMUM RATINGS

ITEM	SYMBOL	MIN	MAX	UNIT
POWER SUPPLY (LOGIC)	Vdd	-0.3	7.0	V
POWER SUPPLY (LCD)	V0	Vdd -13.5	Vdd +0.3	V
INPUT VOLTAGE	Vin	-0.3	Vdd +0.3	V

PIN ASSIGNMENT

PIN	SYMBOL	FUNCTION
1	Vss	GND
2	Vdd	Power Supply
3	V0	Contrast Adjust
4	RS	Register Select Signal
5	R/W	Data Read/Write
6	E	Enable Signal
7-14	DB0-DB7	Data Bus Line
15(A)	LED+	Power supply for BKL(+)
16(K)	LED-	Power supply for BKL(-)

MECHANICAL SPECIFICATIONS

CHARACTER NUMBER	16W X 1H	—
OVERALL SIZE	122.00W X 33.00H	mm
VIEWING AREA	99.00W X 13.00H	mm
HOLE - HOLE	115.00W X 25.00H	mm
CHARACTER SIZE	4.84W X 9.22H	mm
CHARACTER PITCH	1.16W	mm
DOT SIZE	0.92W X 1.10H	mm
DOT PITCH	0.06W X 0.06H	mm

ELECTRONICAL CHARACTERISTICS

ITEM	SYMBOL	CONDITION	STANDARD			UNIT
			MIN	TYP	MAX	
Input voltage	Vdd	+5V	4.7	5.0	5.5	V
		+3.3V	2.7	3.0	3.3	V
Supply current	Idd	Vdd=5V	---	1.5	4.0	mA
Recommended LCD driving voltage for normal temp version module	Vdd-V0	0 °C	4.7	5.0	5.5	V
		25 °C	4.3	4.5	4.7	
		50 °C	4.1	4.3	4.5	
LED forward voltage	V_F	25 °C	---	4.2	4.6	V
LED forward current	I_F	25 °C	---	180	---	mA
EL power supply current	EL	AC 400Hz V_{EL} =110V	----	---	---	mA

DISPLAY CHARACTER ADDRESS CODE

Display position	1	2	3	4	5	6	7	8	9	10	11	12	13	14	15	16
DDRAM address	00	01	02	--	--	--	07	40	41	42	--	--	--			47

FORDATA ELECTRONIC CO.,LTD

PROFESSIONAL LCD SUPPLIER FROM CHINA

FDCC1601E

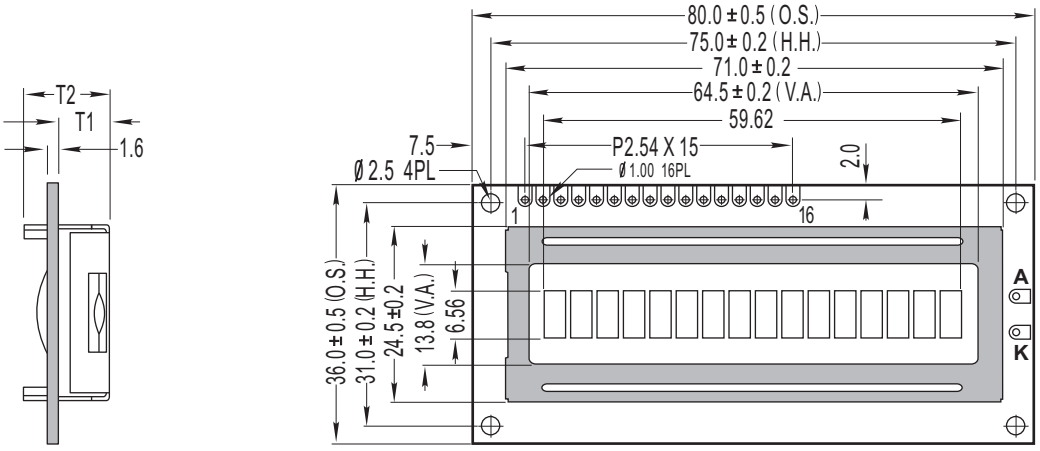

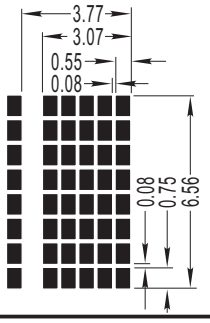

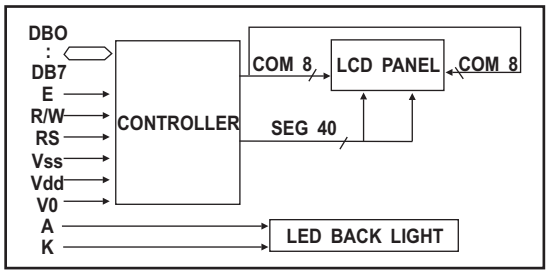

* O.S.=Overall Size
* V.A.=Viewing Area
* H.H.=Hole -Hole

ITEM	T1	T2	UNIT
LED backlight	8.5	13.5	mm
EL or without backlight	4.5	9.5	mm

FEATURE

1. 5X8 dots with cursor
2. Built- in controller (SPLC780D or Equivalent)
3. +5V power supply (Also available for +3.0V)
4. 1/16 duty cycle
5. BKL to be driven by pin1,pin2,or pin15,pin16 or A,K
6. N.V. Optional

ABSOLUTE MAXIMUM RATINGS

ITEM	SYMBOL	MIN	MAX	UNIT
POWER SUPPLY (LOGIC)	Vdd	-0.3	7.0	V
POWER SUPPLY (LCD)	V0	Vdd -13.5	Vdd +0.3	V
INPUT VOLTAGE	Vin	-0.3	Vdd +0.3	V

PIN ASSIGNMENT

PIN	SYMBOL	FUNCTION
1	Vss	GND
2	Vdd	Power Supply
3	V0	Contrast Adjust
4	RS	Register Select Signal
5	R/W	Data Read/Write
6	E	Enable Signal
7-14	DB0-DB7	Data Bus Line
15(A)	LED+	Power supply for BKL(+)
16(K)	LED-	Power supply for BKL(-)

MECHANICAL SPECIFICATIONS

CHARACTER NUMBER	16W X 1H	—
OVERALL SIZE	80.00W X 36.00H	mm
VIEWING AREA	64.00W X 13.80H	mm
HOLE - HOLE	75.00W X 31.00H	mm
CHARACTER SIZE	3.07W X 6.56H	mm
CHARACTER PITCH	0.70W	mm
DOT SIZE	0.55W X 0.75H	mm
DOT PITCH	0.08W X 0.08H	mm

ELECTRONICAL CHARACTERISTICS

ITEM	SYMBOL	CONDITION	STANDARD			UNIT
			MIN	TYP	MAX	
Input voltage	Vdd	+5V	4.7	5.0	5.5	V
		+3.3V	2.7	3.0	3.3	V
Supply current	Idd	Vdd=5V	---	1.3	4.0	mA
Recommended LCD driving voltage for normal temp version module	Vdd-V0	0 °C	4.7	5.0	5.5	V
		25 °C	4.3	4.5	4.7	
		50 °C	4.1	4.3	4.5	
LED forward voltage	V_F	25 °C	---	4.2	4.6	V
LED forward current	I_F	25 °C	---	110	---	mA
EL power supply current	EL	AC 400Hz V_{EL} =110V	----	---	---	mA

DISPLAY CHARACTER ADDRESS CODE

Display position	*1*	*2*	*3*	*4*	*5*	*6*	*7*	*8*	*9*	*10*	*11*	*12*	*13*	*14*	*15*	*16*
DDRAM address	*00*	*01*	*02*	*--*	*--*	*--*	*07*	*40*	*41*	*42*	*--*	*--*	*--*			*47*

FORDATA ELECTRONIC CO.,LTD

PROFESSIONAL LCD SUPPLIER FROM CHINA

FDCC1602A

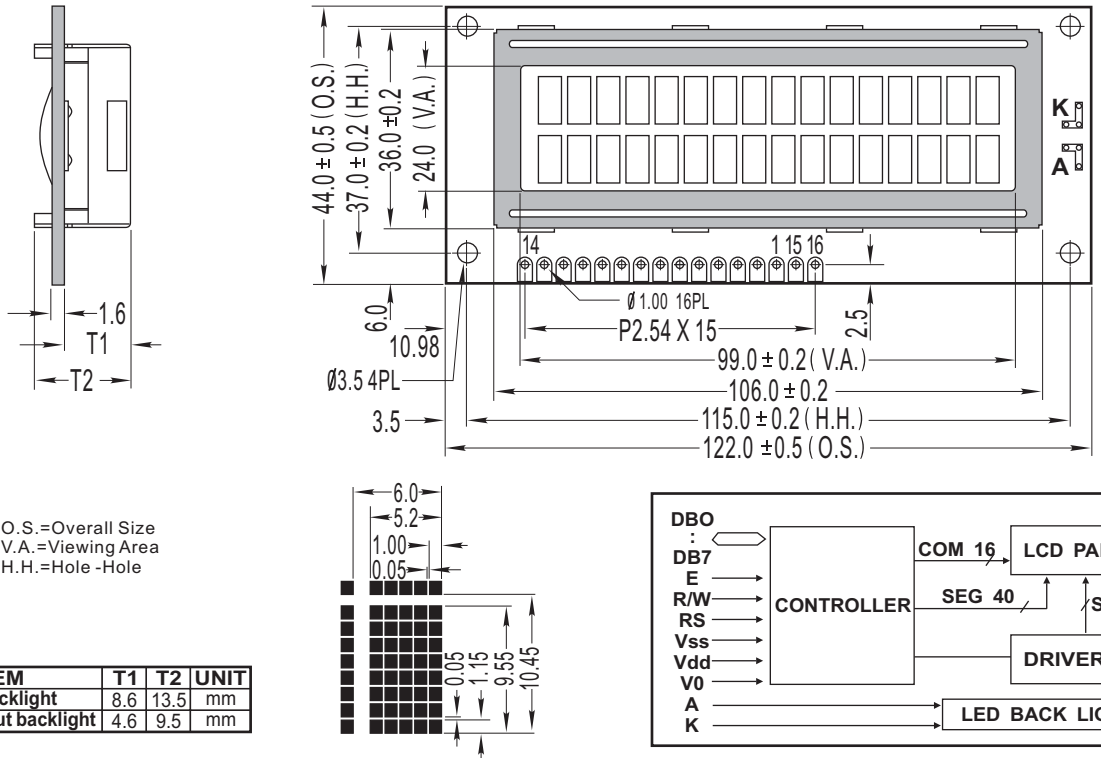

* O.S.=Overall Size
* V.A.=Viewing Area
* H.H.=Hole -Hole

ITEM	T1	T2	UNIT
LED backlight	8.6	13.5	mm
EL or without backlight	4.6	9.5	mm

FEATURE

1. 5X8 dots with cursor
2. Built- in controller (SPLC780D or Equivalent)
3. +5V power supply (Also available for +3.0V)
4. 1/16 duty cycle
5. BKL to be driven by pin1,pin2,or pin15,pin16 or A,K
6. N.V. Optional

ABSOLUTE MAXIMUM RATINGS

ITEM	SYMBOL	MIN	MAX	UNIT
POWER SUPPLY (LOGIC)	Vdd	-0.3	7.0	V
POWER SUPPLY (LCD)	V0	Vdd -13.5	Vdd +0.3	V
INPUT VOLTAGE	Vin	-0.3	Vdd +0.3	V

PIN ASSIGNMENT

PIN	SYMBOL	FUNCTION
1	Vss	GND
2	Vdd	Power Supply
3	V0	Contrast Adjust
4	RS	Register Select Signal
5	R/W	Data Read/Write
6	E	Enable Signal
7-14	DB0-DB7	Data Bus Line
15(A)	LED+	Power supply for BKL(+)
16(K)	LED-	Power supply for BKL(-)

MECHANICAL SPECIFICATIONS

CHARACTER NUMBER	16W X 2H	—
OVERALL SIZE	122.00W X 44.00H	mm
VIEWING AREA	99.00W X 24.00H	mm
HOLE - HOLE	115.00W X 37.00H	mm
CHARACTER SIZE	5.20W X 9.55H	mm
CHARACTER PITCH	0.80W X 0.90H	mm
DOT SIZE	1.00W X 1.15H	mm
DOT PITCH	0.05W X 0.05H	mm

ELECTRONICAL CHARACTERISTICS

ITEM	SYMBOL	CONDITION	STANDARD			UNIT
			MIN	TYP	MAX	
Input voltage	Vdd	+5V	4.7	5.0	5.5	V
		+3.3V	2.7	3.0	3.3	V
Supply current	Idd	Vdd=5V	---	1.5	4.0	mA
Recommended LCD driving voltage for normal temp version module	Vdd-V0	0 °C	4.7	5.0	5.5	V
		25 °C	4.3	4.5	4.7	
		50 °C	4.1	4.3	4.5	
LED forward voltage	V_F	25 °C	---	4.2	4.6	V
LED forward current	I_F	25 °C	---	240	---	mA
EL power supply current	EL	AC 400Hz V_{EL} =110V	----	---	---	mA

DISPLAY CHARACTER ADDRESS CODE

Display position	*1*	*2*	*3*	*4*	*5*	*6*	*7*	*8*	*9*	*10*	*11*	*12*	*13*	*14*	*15*	*16*
DDRAM address	*00*	*01*	*02*	--	--	--	--	--								*0F*
DDRAM address	*40*	*41*	*42*	--	--	--	--	--								*4F*

FORDATA ELECTRONIC CO.,LTD

PROFESSIONAL LCD SUPPLIER FROM CHINA

FECC1602B

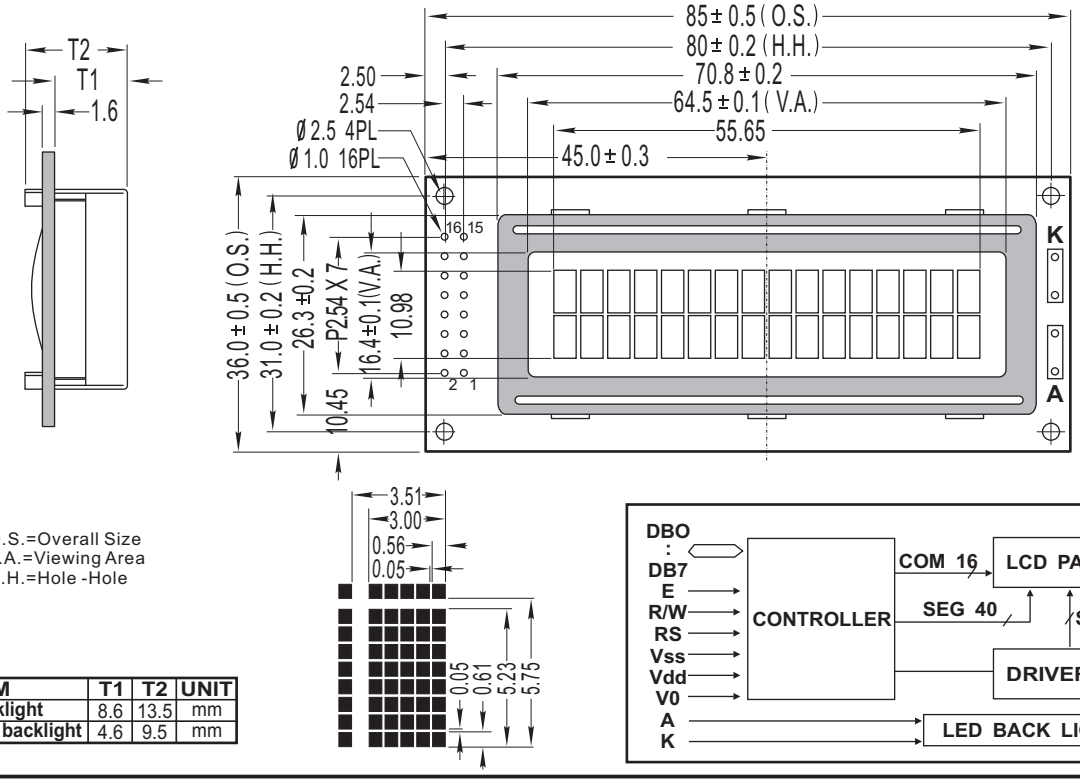

* O.S.=Overall Size
* V.A.=Viewing Area
* H.H.=Hole -Hole

ITEM	T1	T2	UNIT
LED backlight	8.6	13.5	mm
EL or without backlight	4.6	9.5	mm

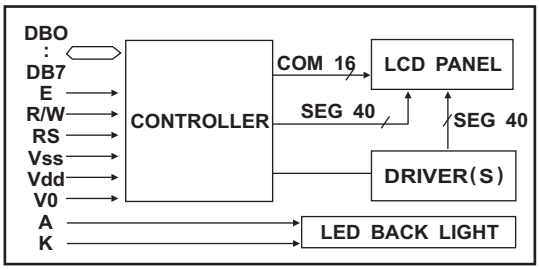

FEATURE

1. 5X8 dots with cursor
2. Built- in controller (SPLC780D or Equivalent)
3. +5V power supply (Also available for +3.0V)
4. 1/16 duty cycle
5. BKL to be driven by pin1,pin2,or pin15,pin16 or A,K
6. N.V. Optional

ABSOLUTE MAXIMUM RATINGS

ITEM	SYMBOL	MIN	MAX	UNIT
POWER SUPPLY (LOGIC)	Vdd	-0.3	7.0	V
POWER SUPPLY (LCD)	V0	Vdd -13.5	Vdd +0.3	V
INPUT VOLTAGE	Vin	-0.3	Vdd +0.3	V

PIN ASSIGNMENT

PIN	SYMBOL	FUNCTION
1	Vss	GND
2	Vdd	Power Supply
3	V0	Contrast Adjust
4	RS	Register Select Signal
5	R/W	Data Read/Write
6	E	Enable Signal
7-14	DB0-DB7	Data Bus Line
15(A)	LED+	Power supply for BKL(+)
16(K)	LED-	Power supply for BKL(-)

MECHANICAL SPECIFICATIONS

CHARACTER NUMBER	16W X 2H	—
OVERALL SIZE	85.00W X 36.00H	mm
VIEWING AREA	63.00W X 16.40H	mm
HOLE - HOLE	80.00W X 31.00H	mm
CHARACTER SIZE	3.00W X 5.23H	mm
CHARACTER PITCH	0.51W X 0.52H	mm
DOT SIZE	0.56W X 0.61H	mm
DOT PITCH	0.05W X 0.05H	mm

ELECTRONICAL CHARACTERISTICS

ITEM	SYMBOL	CONDITION	STANDARD			UNIT
			MIN	TYP	MAX	
Input voltage	Vdd	+5V	4.7	5.0	5.5	V
		+3.3V	2.7	3.0	3.3	V
Supply current	Idd	Vdd=5V	---	1.5	4.0	mA
Recommended LCD driving voltage for normal temp version module	Vdd-V0	0 °C	4.7	5.0	5.5	V
		25 °C	4.3	4.5	4.7	
		50 °C	4.1	4.3	4.5	
LED forward voltage	V_F	25 °C	---	--	---	V
LED forward current	I_F	25 °C	---	---	---	mA
EL power supply current	EL	AC 400Hz V_{EL} =110V	----	---	---	mA

DISPLAY CHARACTER ADDRESS CODE

Display position	1	2	3	4	5	6	7	8	9	10	11	12	13	14	15	16
DDRAM address	00	01	02	--	--	--	--	--								0F
DDRAM address	40	41	42	--	--	--	--	--								4F

FORDATA ELECTRONIC CO.,LTD

PROFESSIONAL LCD SUPPLIER FROM CHINA

FECC1602C

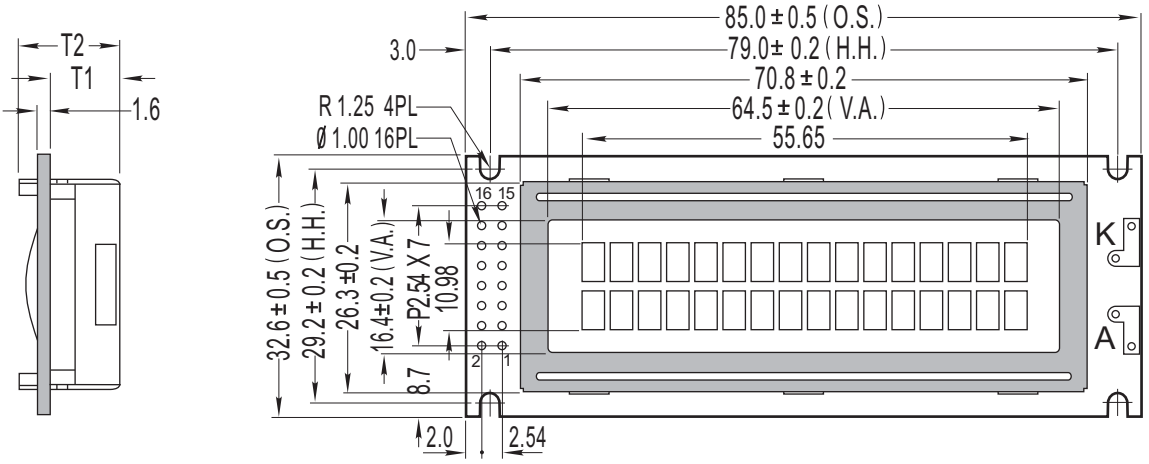

* O.S.=Overall Size
* V.A.=Viewing Area
* H.H.=Hole -Hole

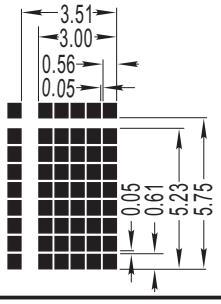

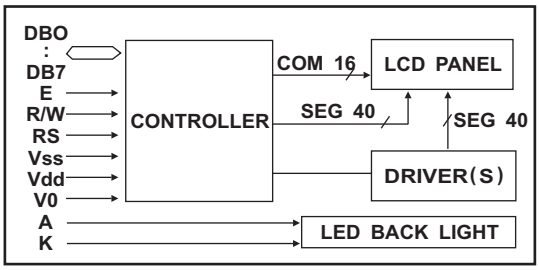

ITEM	T1	T2	UNIT
LED backlight	8.6	13.5	mm
EL or without backlight	4.6	9.5	mm

FEATURE

1. 5X8 dots with cursor
2. Built- in controller (SPLC780D or Equivalent)
3. +5V power supply (Also available for +3.0V)
4. 1/16 duty cycle
5. BKL to be driven by pin1,pin2,or pin15,pin16 or A,K
6. N.V. Optional

ABSOLUTE MAXIMUM RATINGS

ITEM	SYMBOL	MIN	MAX	UNIT
POWER SUPPLY (LOGIC)	Vdd	-0.3	7.0	V
POWER SUPPLY (LCD)	V0	Vdd -13.5	Vdd +0.3	V
INPUT VOLTAGE	Vin	-0.3	Vdd +0.3	V

PIN ASSIGNMENT

PIN	SYMBOL	FUNCTION
1	Vss	GND
2	Vdd	Power Supply
3	V0	Contrast Adjust
4	RS	Register Select Signal
5	R/W	Data Read/Write
6	E	Enable Signal
7-14	DB0-DB7	Data Bus Line
15(A)	LED+	Power supply for BKL(+)
16(K)	LED-	Power supply for BKL(-)

MECHANICAL SPECIFICATIONS

CHARACTER NUMBER	16W X 2H	—
OVERALL SIZE	85.00W X 32.60H	mm
VIEWING AREA	64.50W X 16.40H	mm
HOLE - HOLE	79.00W X 29.20H	mm
CHARACTER SIZE	3.00W X 5.23H	mm
CHARACTER PITCH	0.51W X 0.52H	mm
DOT SIZE	0.56W X 0.61H	mm
DOT PITCH	0.05W X 0.05H	mm

ELECTRONICAL CHARACTERISTICS

ITEM	SYMBOL	CONDITION	STANDARD			UNIT
			MIN	TYP	MAX	
Input voltage	Vdd	+5V	4.7	5.0	5.5	V
		+3.3V	2.7	3.0	3.3	V
Supply current	Idd	Vdd=5V	---	1.5	4.0	mA
Recommended LCD driving voltage for normal temp version module	Vdd-V0	0 °C	4.7	4.8	5.5	V
		25 °C	4.3	4.5	4.7	
		50 °C	4.1	4.3	4.5	
LED forward voltage	V_F	25 °C	---	4.2	4.6	V
LED forward current	I_F	25 °C	---	120	---	mA
EL power supply current	EL	AC 400Hz V_{EL} =110V	----	---	---	mA

DISPLAY CHARACTER ADDRESS CODE

Display position	*1*	*2*	*3*	*4*	*5*	*6*	*7*	*8*	*9*	*10*	*11*	*12*	*13*	*14*	*15*	*16*
DDRAM address	*00*	*01*	*02*	--	--	--	--	--								*0F*
DDRAM address	*40*	*41*	*42*	--	--	--	--	--								*4F*

FORDATA ELECTRONIC CO.,LTD

PROFESSIONAL LCD SUPPLIER FROM CHINA

FECC1602D

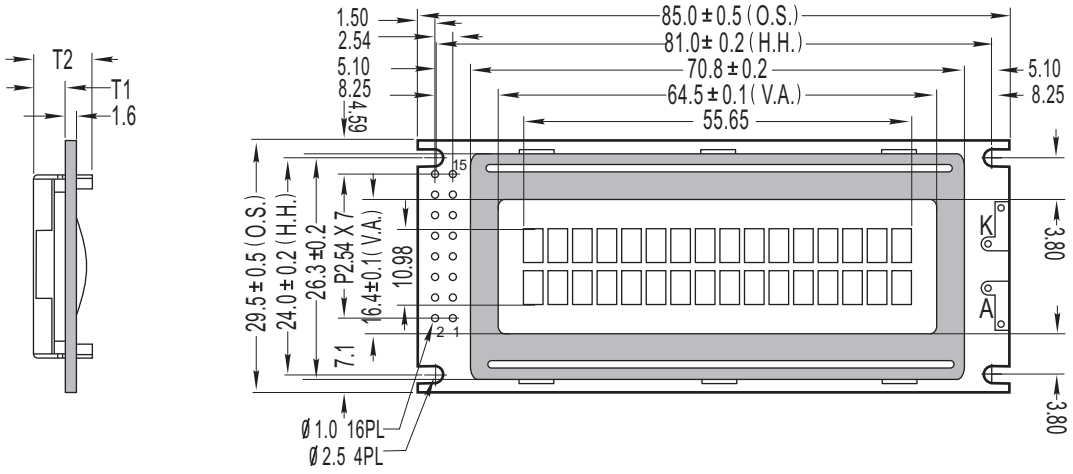

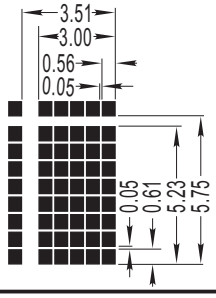

* O.S.=Overall Size
* V.A.=Viewing Area
* H.H.=Hole -Hole

ITEM	T1	T2	UNIT
LED backlight	8.6	13.5	mm
EL or without backlight	4.6	9.5	mm

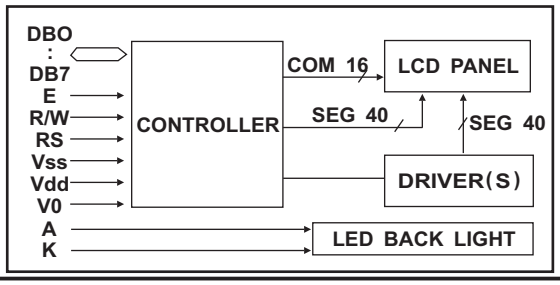

FEATURE

1. 5X8 dots with cursor
2. Built- in controller (SPLC780D or Equivalent)
3. +5V power supply (Also available for +3.0V)
4. 1/16 duty cycle
5. BKL to be driven by pin1,pin2,or pin15,pin16 or A,K
6. N.V. Optional

ABSOLUTE MAXIMUM RATINGS

ITEM	SYMBOL	MIN	MAX	UNIT
POWER SUPPLY (LOGIC)	Vdd	-0.3	7.0	V
POWER SUPPLY (LCD)	V0	Vdd -13.5	Vdd +0.3	V
INPUT VOLTAGE	Vin	-0.3	Vdd +0.3	V

PIN ASSIGNMENT

PIN	SYMBOL	FUNCTION
1	Vdd	Power Supply
2	Vss	GND
3	V0	Contrast Adjust
4	RS	Register Select Signal
5	R/W	Data Read/Write
6	E	Enable Signal
7-14	DB0-DB7	Data Bus Line
A	LED+	Power supply for BKL(+)
K	LED-	Power supply for BKL(-)

MECHANICAL SPECIFICATIONS

CHARACTER NUMBER	16W X 2H	—
OVERALL SIZE	85.00W X 29.50H	mm
VIEWING AREA	64.50W X 16.40H	mm
HOLE - HOLE	81.00W X 24.00H	mm
CHARACTER SIZE	3.00W X 5.23H	mm
CHARACTER PITCH	0.51W X 0.52H	mm
DOT SIZE	0.56W X 0.61H	mm
DOT PITCH	0.05W X 0.05H	mm

ELECTRONICAL CHARACTERISTICS

ITEM	SYMBOL	CONDITION	STANDARD			UNIT
			MIN	TYP	MAX	
Input voltage	Vdd	+5V	4.7	5.0	5.5	V
		+3.3V	2.7	3.0	3.3	V
Supply current	Idd	Vdd=5V	---	1.5	4.0	mA
Recommended LCD driving voltage for normal temp version module	Vdd-V0	0 °C	4.7	4.8	5.5	V
		25 °C	4.3	4.5	4.7	
		50 °C	4.1	4.3	4.5	
LED forward voltage	V_F	25 °C	---	4.2	4.6	V
LED forward current	I_F	25 °C	---	120	---	mA
EL power supply current	EL	AC 400Hz V_{EL} =110V	----	---	---	mA

DISPLAY CHARACTER ADDRESS CODE

Display position	*1*	*2*	*3*	*4*	*5*	*6*	*7*	*8*	*9*	*10*	*11*	*12*	*13*	*14*	*15*	*16*
DDRAM address 00 01 02	--	--	--	--	--											*0F*
DDRAM address 40 41 42	--	--	--	--	--											*4F*

FORDATA ELECTRONIC CO.,LTD

PROFESSIONAL LCD SUPPLIER FROM CHINA

FECC1602E

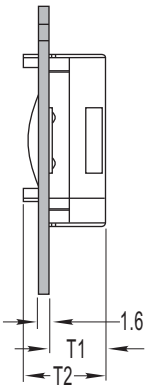

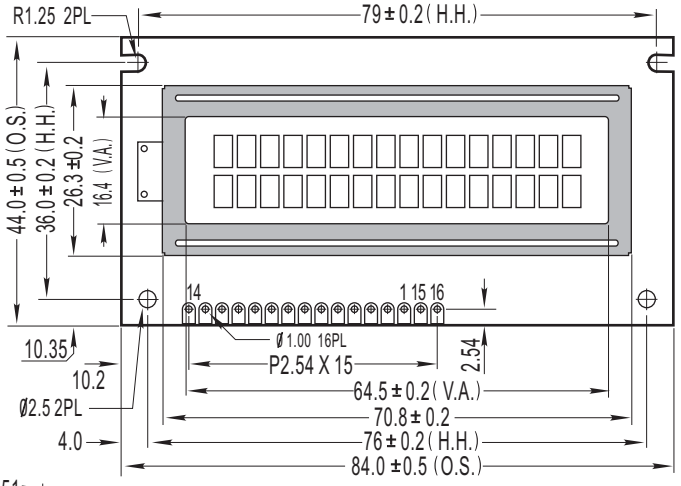

* O.S.=Overall Size
* V.A.=Viewing Area
* H.H.=Hole -Hole

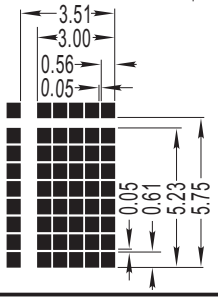

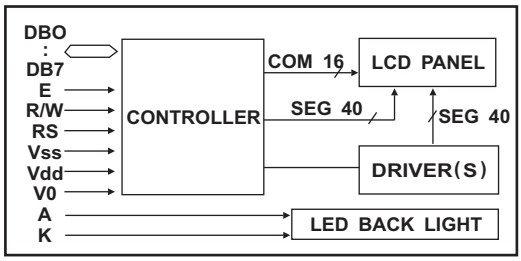

ITEM	T1	T2	UNIT
LED backlight	8.6	13.5	mm
EL or without backlight	4.6	9.5	mm

FEATURE

1. 5X8 dots with cursor
2. Built- in controller (SPLC780D or Equivalent)
3. +5V power supply (Also available for +3.0V)
4. 1/16 duty cycle
5. BKL to be driven by pin1,pin2,or pin15,pin16 or A,K
6. N.V. Optional

MECHANICAL SPECIFICATIONS

CHARACTER NUMBER	16W X 2H	—
OVERALL SIZE	84.00W X 44.00H	mm
VIEWING AREA	64.50W X 16.40H	mm
HOLE - HOLE	79/76W X 36.00H	mm
CHARACTER SIZE	3.00W X 5.23H	mm
CHARACTER PITCH	0.51W X 0.52H	mm
DOT SIZE	0.56W X 0.61H	mm
DOT PITCH	0.05W X 0.05H	mm

ABSOLUTE MAXIMUM RATINGS

ITEM	SYMBOL	MIN	MAX	UNIT
POWER SUPPLY (LOGIC)	Vdd	-0.3	7.0	V
POWER SUPPLY (LCD)	V0	Vdd -13.5	Vdd +0.3	V
INPUT VOLTAGE	Vin	-0.3	Vdd +0.3	V

ELECTRONICAL CHARACTERISTICS

ITEM	SYMBOL	CONDITION	STANDARD			UNIT
			MIN	TYP	MAX	
Input voltage	Vdd	+5V	4.7	5.0	5.5	V
		+3.3V	2.7	3.0	3.3	V
Supply current	Idd	Vdd=5V	---	1.5	4.0	mA
Recommended LCD driving voltage for normal temp version module	Vdd-V0	0 °C	4.7	5.0	5.5	V
		25 °C	4.3	4.5	4.7	
		50 °C	4.1	4.3	4.5	
LED forward voltage	V_F	25 °C	---	--	---	V
LED forward current	I_F	25 °C	---	---	---	mA
EL power supply current	EL	AC 400Hz V_{EL} =110V	----	---	---	mA

PIN ASSIGNMENT

PIN	SYMBOL	FUNCTION
1	Vss	GND
2	Vdd	Power Supply
3	V0	Contrast Adjust
4	RS	Register Select Signal
5	R/W	Data Read/Write
6	E	Enable Signal
7-14	DB0-DB7	Data Bus Line
15(A)	LED+	Power supply for BKL(+)
16(K)	LED-	Power supply for BKL(-)

DISPLAY CHARACTER ADDRESS CODE

Display position	*1*	*2*	*3*	*4*	*5*	*6*	*7*	*8*	*9*	*10*	*11*	*12*	*13*	*14*	*15*	*16*
DDRAM address	*00*	*01*	*02*	--	--	--	--	--								*0F*
DDRAM address	*40*	*41*	*42*	--	--	--	--	--								*4F*

FORDATA ELECTRONIC CO.,LTD

PROFESSIONAL LCD SUPPLIER FROM CHINA

FECC1602G

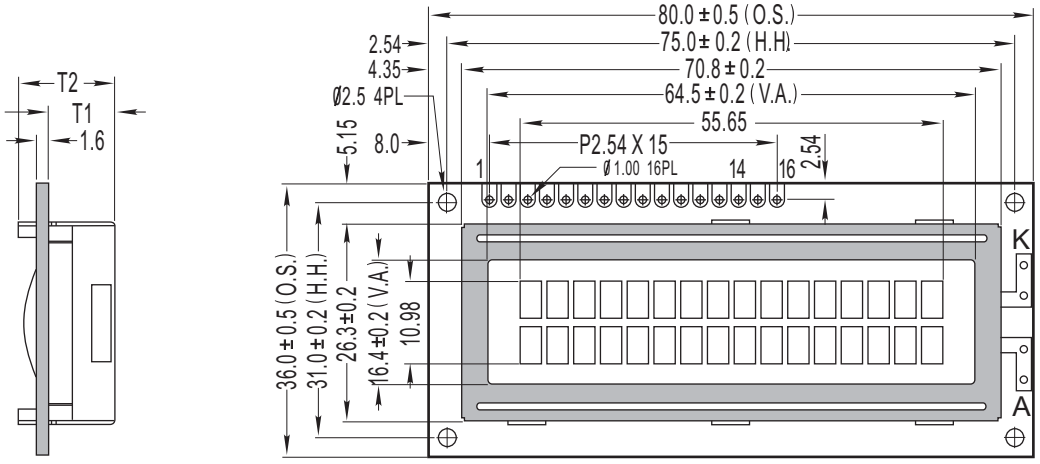

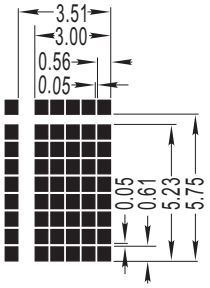

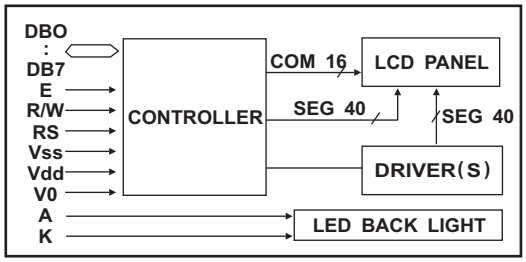

* O.S.=Overall Size
* V.A.=Viewing Area
* H.H.=Hole -Hole

ITEM	T1	T2	UNIT
LED backlight	8.6	13.5	mm
EL or without backlight	4.6	9.5	mm

FEATURE

1. 5X8 dots with cursor
2. Built- in controller (SPLC780D or Equivalent)
3. +5V power supply (Also available for +3.0V)
4. 1/16 duty cycle
5. BKL to be driven by pin1,pin2,or pin15,pin16 or A,K
6. N.V. Optional

ABSOLUTE MAXIMUM RATINGS

ITEM	SYMBOL	MIN	MAX	UNIT
POWER SUPPLY (LOGIC)	Vdd	-0.3	7.0	V
POWER SUPPLY (LCD)	V0	Vdd -13.5	Vdd +0.3	V
INPUT VOLTAGE	Vin	-0.3	Vdd +0.3	V

PIN ASSIGNMENT

PIN	SYMBOL	FUNCTION
1	Vss	GND
2	Vdd	Power Supply
3	V0	Contrast Adjust
4	RS	Register Select Signal
5	R/W	Data Read/Write
6	E	Enable Signal
7-14	DB0-DB7	Data Bus Line
15(A)	LED+	Power supply for BKL(+)
16(K)	LED-	Power supply for BKL(-)

MECHANICAL SPECIFICATIONS

CHARACTER NUMBER	16W X 2H	—
OVERALL SIZE	80.00W X 36.00H	mm
VIEWING AREA	64.50W X 16.40H	mm
HOLE - HOLE	75.00W X 31.00H	mm
CHARACTER SIZE	3.00W X 5.23H	mm
CHARACTER PITCH	0.51W X 0.52H	mm
DOT SIZE	0.56W X 0.61H	mm
DOT PITCH	0.05W X 0.05H	mm

ELECTRONICAL CHARACTERISTICS

ITEM	SYMBOL	CONDITION	STANDARD			UNIT
			MIN	TYP	MAX	
Input voltage	Vdd	+5V	4.7	5.0	5.5	V
		+3.3V	2.7	3.0	3.3	V
Supply current	Idd	Vdd=5V	---	1.5	4.0	mA
Recommended LCD driving voltage for normal temp version module	Vdd-V0	0 °C	4.7	5.0	5.5	V
		25 °C	4.3	4.5	4.7	
		50 °C	4.1	4.3	4.5	
LED forward voltage	V_F	25 °C	---	4.2	4.6	V
LED forward current	I_F	25 °C	---	120	160	mA
EL power supply current	EL	AC 400Hz V_{EL} =110V	----	---	---	mA

DISPLAY CHARACTER ADDRESS CODE

Display position	*1*	*2*	*3*	*4*	*5*	*6*	*7*	*8*	*9*	*10*	*11*	*12*	*13*	*14*	*15*	*16*
DDRAM address	*00*	*01*	*02*	--	--	--	--	--								*0F*
DDRAM address	*40*	*41*	*42*	--	--	--	--	--								*4F*

FORDATA ELECTRONIC CO.,LTD

PROFESSIONAL LCD SUPPLIER FROM CHINA

FDCC1602L

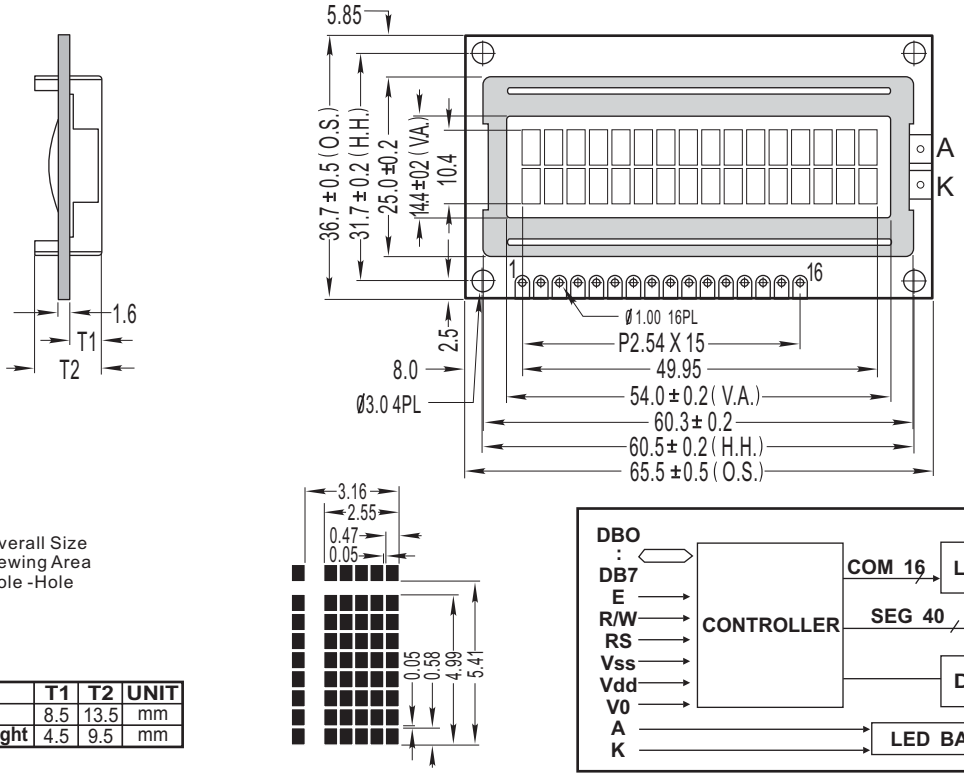

* O.S.=Overall Size
* V.A.=Viewing Area
* H.H.=Hole -Hole

ITEM	T1	T2	UNIT
LED backlight	8.5	13.5	mm
EL or without backlight	4.5	9.5	mm

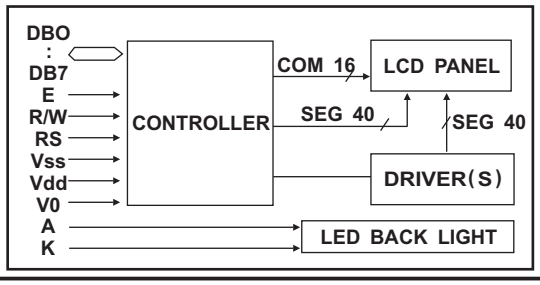

FEATURE

1. 5X8 dots with cursor
2. Built- in controller (SPLC780D or Equivalent)
3. +5V power supply (Also available for +3.0V)
4. 1/16 duty cycle
5. BKL to be driven by pin1,pin2,or pin15,pin16 or A,K
6. N.V. Optional

ABSOLUTE MAXIMUM RATINGS

ITEM	SYMBOL	MIN	MAX	UNIT
POWER SUPPLY (LOGIC)	Vdd	-0.3	7.0	V
POWER SUPPLY (LCD)	V0	Vdd -13.5	Vdd +0.3	V
INPUT VOLTAGE	Vin	-0.3	Vdd +0.3	V

PIN ASSIGNMENT

PIN	SYMBOL	FUNCTION
1	Vss	GND
2	Vdd	Power Supply
3	V0	Contrast Adjust
4	RS	Register Select Signal
5	R/W	Data Read/Write
6	E	Enable Signal
7-14	DB0-DB7	Data Bus Line
15(A)	LED+	Power supply for BKL(+)
16(K)	LED-	Power supply for BKL(-)

MECHANICAL SPECIFICATIONS

CHARACTER NUMBER	16W X 2H	—
OVERALL SIZE	65.50W X 36.70H	mm
VIEWING AREA	54.00W X 14.40H	mm
HOLE - HOLE	60.50W X 31.70H	mm
CHARACTER SIZE	2.55W X 4.99H	mm
CHARACTER PITCH	0.61W X 0.42H	mm
DOT SIZE	0.47W X 0.58H	mm
DOT PITCH	0.05W X 0.05H	mm

ELECTRONICAL CHARACTERISTICS

ITEM	SYMBOL	CONDITION	STANDARD			UNIT
			MIN	TYP	MAX	
Input voltage	Vdd	+5V	4.7	5.0	5.5	V
		+3.3V	2.7	3.0	3.3	V
Supply current	Idd	Vdd=5V	---	1.5	4.0	mA
Recommended LCD driving voltage for normal temp version module	Vdd-V0	0 °C	4.7	5.0	5.5	V
		25 °C	4.3	4.5	4.7	
		50 °C	4.1	4.3	4.5	
LED forward voltage	V_F	25 °C	---	4.2	4.6	V
LED forward current	I_F	25 °C	---	120	---	mA
EL power supply current	EL	AC 400Hz V_{EL} =110V	----	---	---	mA

DISPLAY CHARACTER ADDRESS CODE

Display position	1	2	3	4	5	6	7	8	9	10	11	12	13	14	15	16
DDRAM address	00	01	02	--	--	--	--	--								0F
DDRAM address	40	41	42	--	--	--	--	--								4F

FORDATA ELECTRONIC CO.,LTD

PROFESSIONAL LCD SUPPLIER FROM CHINA

FDCC1602N

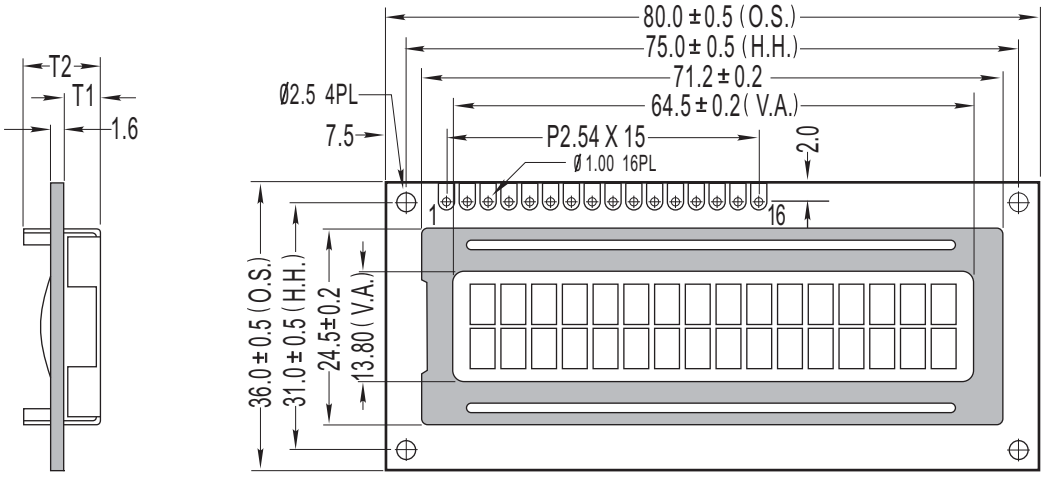

* O.S.=Overall Size
* V.A.=Viewing Area
* H.H.=Hole -Hole

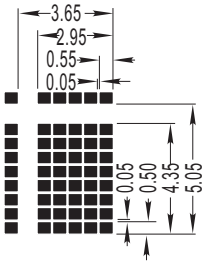

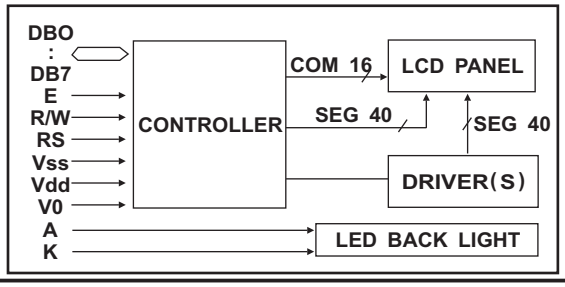

ITEM	T1	T2	UNIT
LED backlight	8.5	13.5	mm
EL or without backlight	4.5	9.5	mm

FEATURE

1. 5X8 dots with cursor
2. Built- in controller (SPLC780D or Equivalent)
3. +5V power supply (Also available for +3.0V)
4. 1/16 duty cycle
5. BKL to be driven by pin1,pin2,or pin15,pin16 or A,K
6. N.V. Optional

ABSOLUTE MAXIMUM RATINGS

ITEM	SYMBOL	MIN	MAX	UNIT
POWER SUPPLY (LOGIC)	Vdd	-0.3	7.0	V
POWER SUPPLY (LCD)	V0	Vdd -13.5	Vdd +0.3	V
INPUT VOLTAGE	Vin	-0.3	Vdd +0.3	V

PIN ASSIGNMENT

PIN	SYMBOL	FUNCTION
1	Vss	GND
2	Vdd	Power Supply
3	V0	Contrast Adjust
4	RS	Register Select Signal
5	R/W	Data Read/Write
6	E	Enable Signal
7-14	DB0-DB7	Data Bus Line
15(A)	LED+	Power supply for BKL(+)
16(K)	LED-	Power supply for BKL(-)

MECHANICAL SPECIFICATIONS

CHARACTER NUMBER	16W X 2H	—
OVERALL SIZE	80.00W X 36.00H	mm
VIEWING AREA	64.00W X 13.80H	mm
HOLE - HOLE	75.00W X 31.00H	mm
CHARACTER SIZE	2.95W X 4.35H	mm
CHARACTER PITCH	0.70W X 0.70H	mm
DOT SIZE	0.55W X 0.50H	mm
DOT PITCH	0.05W X 0.05H	mm

ELECTRONICAL CHARACTERISTICS

ITEM	SYMBOL	CONDITION	STANDARD			UNIT
			MIN	TYP	MAX	
Input voltage	Vdd	+5V	4.7	5.0	5.5	V
		+3.3V	2.7	3.0	3.3	V
Supply current	Idd	Vdd=5V	---	1.5	4.0	mA
Recommended LCD driving voltage for normal temp version module	Vdd-V0	0 °C	4.7	4.8	5.5	V
		25 °C	4.3	4.5	4.7	
		50 °C	4.1	4.4	4.5	
LED forward voltage	V_F	25 °C	---	4.2	4.6	V
LED forward current	I_F	25 °C	---	120	---	mA
EL power supply current	EL	AC 400Hz V_{EL} =110V	----	---	---	mA

DISPLAY CHARACTER ADDRESS CODE

Display position	*1*	*2*	*3*	*4*	*5*	*6*	*7*	*8*	*9*	*10*	*11*	*12*	*13*	*14*	*15*	*16*
DDRAM address	*00*	*01*	*02*	--	--	--	--	--								*0F*
DDRAM address	*40*	*41*	*42*	--	--	--	--	--								*4F*

FORDATA ELECTRONIC CO.,LTD

PROFESSIONAL LCD SUPPLIER FROM CHINA

FDCC1602P

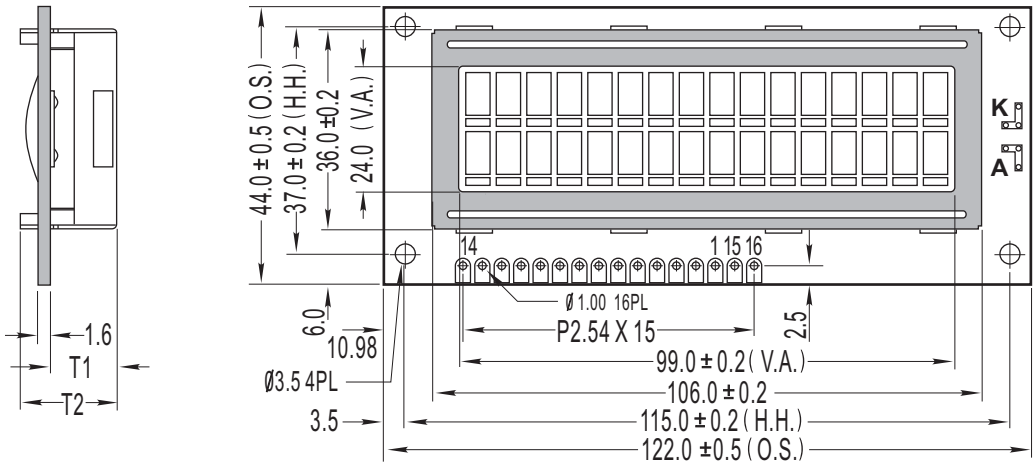

* O.S.=Overall Size
* V.A.=Viewing Area
* H.H.=Hole -Hole

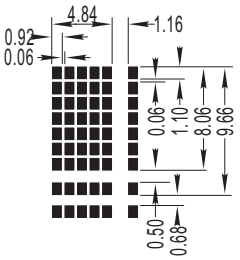

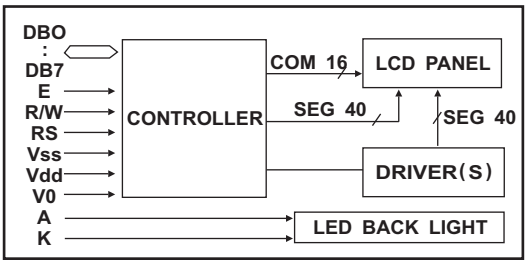

ITEM	T1	T2	UNIT
LED backlight	8.6	13.5	mm
EL or without backlight	4.6	9.5	mm

FEATURE

1. 5X8 dots with cursor
2. Built- in controller (SPLC780D or Equivalent)
3. +5V power supply (Also available for +3.0V)
4. 1/16 duty cycle
5. BKL to be driven by pin1,pin2,or pin15,pin16 or A,K
6. N.V. Optional

ABSOLUTE MAXIMUM RATINGS

ITEM	SYMBOL	MIN	MAX	UNIT
POWER SUPPLY (LOGIC)	Vdd	-0.3	7.0	V
POWER SUPPLY (LCD)	V0	Vdd -13.5	Vdd +0.3	V
INPUT VOLTAGE	Vin	-0.3	Vdd +0.3	V

PIN ASSIGNMENT

PIN	SYMBOL	FUNCTION
1	Vss	GND
2	Vdd	Power Supply
3	V0	Contrast Adjust
4	RS	Register Select Signal
5	R/W	Data Read/Write
6	E	Enable Signal
7-14	DB0-DB7	Data Bus Line
15(A)	LED+	Power supply for BKL(+)
16(K)	LED-	Power supply for BKL(-)

MECHANICAL SPECIFICATIONS

CHARACTER NUMBER	16W X 2H	—
OVERALL SIZE	122.00W X 44.00H	mm
VIEWING AREA	99.00W X 24.00H	mm
HOLE - HOLE	115.00W X 37.00H	mm
CHARACTER SIZE	4.84W X 9.66H	mm
CHARACTER PITCH	1.16W X 0.68H	mm
DOT SIZE	0.92W X 1.10H	mm
DOT PITCH	0.06W X 0.06H	mm

ELECTRONICAL CHARACTERISTICS

ITEM	SYMBOL	CONDITION	STANDARD			UNIT
			MIN	TYP	MAX	
Input voltage	Vdd	+5V	4.7	5.0	5.5	V
		+3.3V	2.7	3.0	3.3	V
Supply current	Idd	Vdd=5V	---	1.5	4.0	mA
Recommended LCD driving voltage for normal temp version module	Vdd-V0	0 °C	4.7	5.0	5.5	V
		25 °C	4.3	4.5	4.7	
		50 °C	4.1	4.3	4.5	
LED forward voltage	V_F	25 °C	---	4.2	4.6	V
LED forward current	I_F	25 °C	---	240	---	mA
EL power supply current	EL	AC 400Hz V_{EL} =110V	----	---	---	mA

DISPLAY CHARACTER ADDRESS CODE

Display position	1	2	3	4	5	6	7	8	9	10	11	12	13	14	15	16
DDRAM address	00	01	02	--	--	--	--	--								0F
DDRAM address	40	41	42	--	--	--	--	--								4F

FORDATA ELECTRONIC CO.,LTD

PROFESSIONAL LCD SUPPLIER FROM CHINA

FDCC1604A

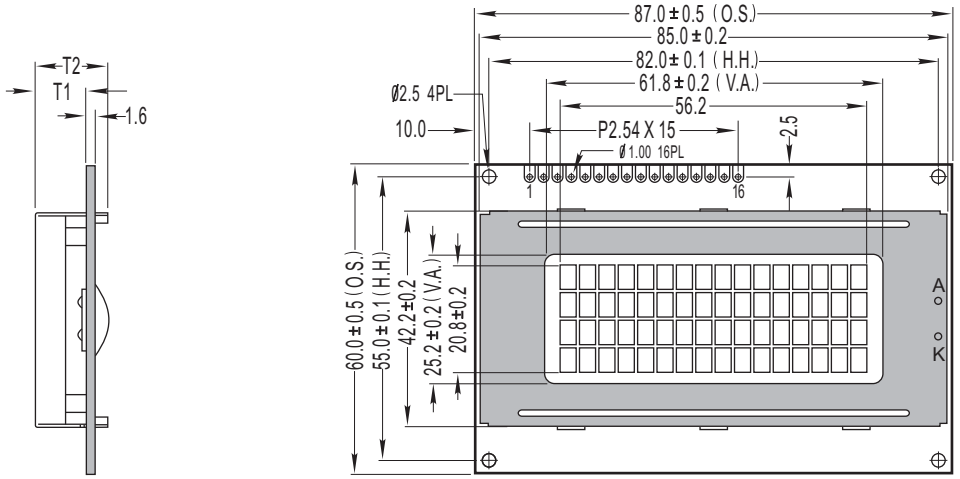

* O.S.=Overall Size
* V.A.=Viewing Area
* H.H.=Hole -Hole

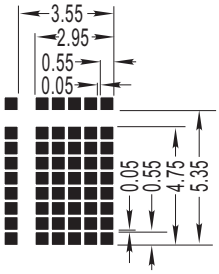

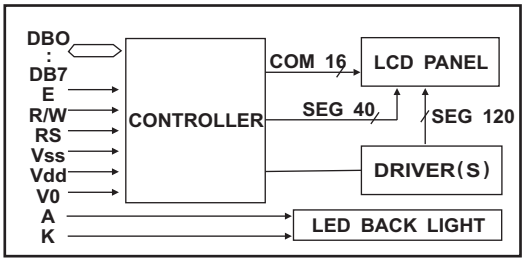

ITEM	T1	T2	UNIT
LED backlight	9.3	14.0	mm
EL or without backlight	4.6	9.5	mm

FEATURE

1. 5X8 dots with cursor
2. Built- in controller (SPLC780D or Equivalent)
3. +5V power supply (Also available for +3.0V)
4. 1/16 duty cycle
5. BKL to be driven by pin1,pin2,or pin15,pin16 or A,K
6. N.V. Optional

MECHANICAL SPECIFICATIONS

CHARACTER NUMBER	16W X 4H	—
OVERALL SIZE	87.00W X 60.00H	mm
VIEWING AREA	61.80W X 25.20H	mm
HOLE - HOLE	82.00W X 55.00H	mm
CHARACTER SIZE	2.95W X 4.75H	mm
CHARACTER PITCH	0.60W X 0.60H	mm
DOT SIZE	0.55W X 0.55H	mm
DOT PITCH	0.05W X 0.05H	mm

ABSOLUTE MAXIMUM RATINGS

ITEM	SYMBOL	MIN	MAX	UNIT
POWER SUPPLY (LOGIC)	Vdd	-0.3	7.0	V
POWER SUPPLY (LCD)	V0	Vdd -13.5	Vdd +0.3	V
INPUT VOLTAGE	Vin	-0.3	Vdd +0.3	V

ELECTRONICAL CHARACTERISTICS

ITEM	SYMBOL	CONDICTION	STANDARD			UNIT
			MIN	TYP	MAX	
Input voltage	Vdd	+5V	4.7	5.0	5.5	V
		+3.3V	2.7	3.0	3.3	V
Supply current	Idd	Vdd=5V	---	3.0	5.0	mA
Recommended LCD driving voltage for normal temp version module	Vdd-V0	0 °C	4.7	5.0	5.5	V
		25 °C	4.3	4.5	4.7	
		50 °C	4.1	4.3	4.5	
LED forward voltage	V_F	25 °C	---	4.2	4.6	V
LED forward current	I_F	25 °C	---	220	---	mA

PIN ASSIGNMENT

PIN	SYMBOL	FUNCTION
1	Vss	GND
2	Vdd	Power Supply
3	V0	Contrast Adjust
4	RS	Register Select Signal
5	R/W	Data Read/Write
6	E	Enable Signal
7-14	DB0-DB7	Data Bus Line
15(A)	LED+	Power supply for BKL(+)
16(K)	LED-	Power supply for BKL(-)

DISPLAY CHARACTER ADDRESS CODE

Display position	*1*	*2*	*3*	*4*	*5*	*6*	*7*	*8*	*9*	*10*	*11*	*12*	*13*	*14*	*15*	*16*	
DDRAM address	*00*	*01*	*02*	--	--	--	--	--									*0F*
DDRAM address	*40*	*41*	*42*	--	--	--	--	--									*4F*
DDRAM address	*10*	*11*	*12*	--	--	--	--	--									*1F*
DDRAM address	*50*	*51*	*52*	--	--	--	--	--									*5F*

FORDATA ELECTRONIC CO.,LTD

PROFESSIONAL LCD SUPPLIER FROM CHINA

FDCC2002C

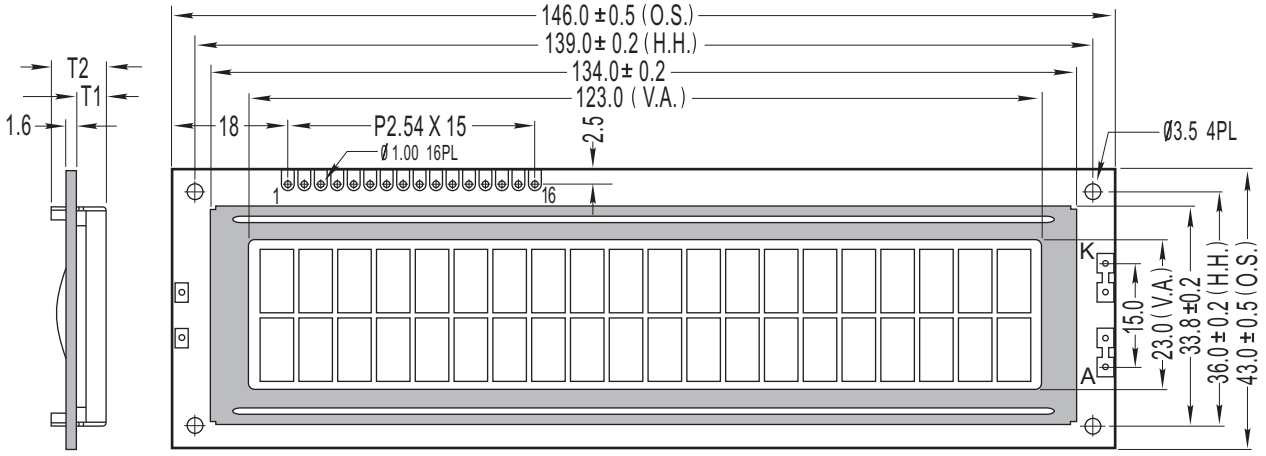

* O.S.=Overall Size
* V.A.=Viewing Area
* H.H.=Hole -Hole

ITEM	T1	T2	UNIT
LED backlight	9.4	14.2	mm
EL or without backlight	4.6	10.0	mm

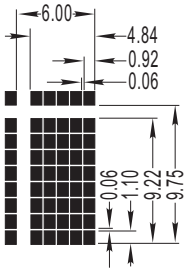

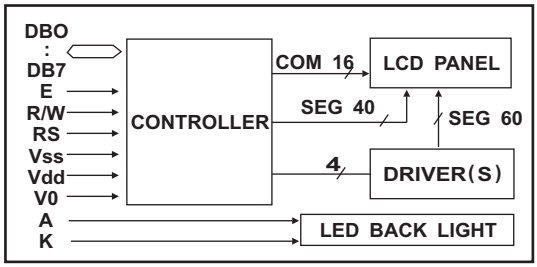

FEATURE

1. 5X8 dots with cursor
2. Built- in controller (SPLC780D or Equivalent)
3. +5V power supply (Also available for +3.0V)
4. 1/16 duty cycle
5. BKL to be driven by pin1,pin2,or pin15,pin16 or A,K
6. N.V. Optional

ABSOLUTE MAXIMUM RATINGS

ITEM	SYMBOL	MIN	MAX	UNIT
POWER SUPPLY (LOGIC)	Vdd	-0.3	7.0	V
POWER SUPPLY (LCD)	V0	Vdd -13.5	Vdd +0.3	V
INPUT VOLTAGE	Vin	-0.3	Vdd +0.3	V

PIN ASSIGNMENT

PIN	SYMBOL	FUNCTION
1	Vss	GND
2	Vdd	Power Supply
3	V0	Contrast Adjust
4	RS	Register Select Signal
5	R/W	Data Read/Write
6	E	Enable Signal
7-14	DB0-DB7	Data Bus Line
15(A)	LED+	Power supply for BKL(+)
16(K)	LED-	Power supply for BKL(-)

MECHANICAL SPECIFICATIONS

CHARACTER NUMBER	20W X 2H	—
OVERALL SIZE	146.00W X 43.00H	mm
VIEWING AREA	123.00W X 23.00H	mm
HOLE - HOLE	139.00W X 36.00H	mm
CHARACTER SIZE	4.84W X 9.22H	mm
CHARACTER PITCH	1.16W X 0.53H	mm
DOT SIZE	0.92W X 1.10H	mm
DOT PITCH	0.06W X 0.06H	mm

ELECTRONICAL CHARACTERISTICS

ITEM	SYMBOL	CONDITION	STANDARD			UNIT
			MIN	TYP	MAX	
Input voltage	Vdd	+5V	4.7	5.0	5.5	V
		+3.3V	2.7	3.0	3.3	V
Supply current	Idd	Vdd=5V	---	2.5	4.0	mA
Recommended LCD driving voltage for normal temp version module	Vdd-V0	0 °C	4.7	4.8	5.5	V
		25 °C	4.3	4.5	4.7	
		50 °C	4.1	4.4	4.5	
LED forward voltage	V_F	25 °C	---	4.2	4.6	V
LED forward current	I_F	25 °C	---	300	---	mA
EL power supply current	EL	AC 400Hz V_{EL} =110V	----	---	---	mA

DISPLAY CHARACTER ADDRESS CODE

Display position	1	2	3	4	5	--	--	--	--	--	--							18	19	20
DDRAM address	00	01	02	--	--	--	--	--										11	12	13
DDRAM address	40	41	42	--	--	--	--	--										51	52	53

FORDATA ELECTRONIC CO.,LTD

PROFESSIONAL LCD SUPPLIER FROM CHINA

FDCC2002D

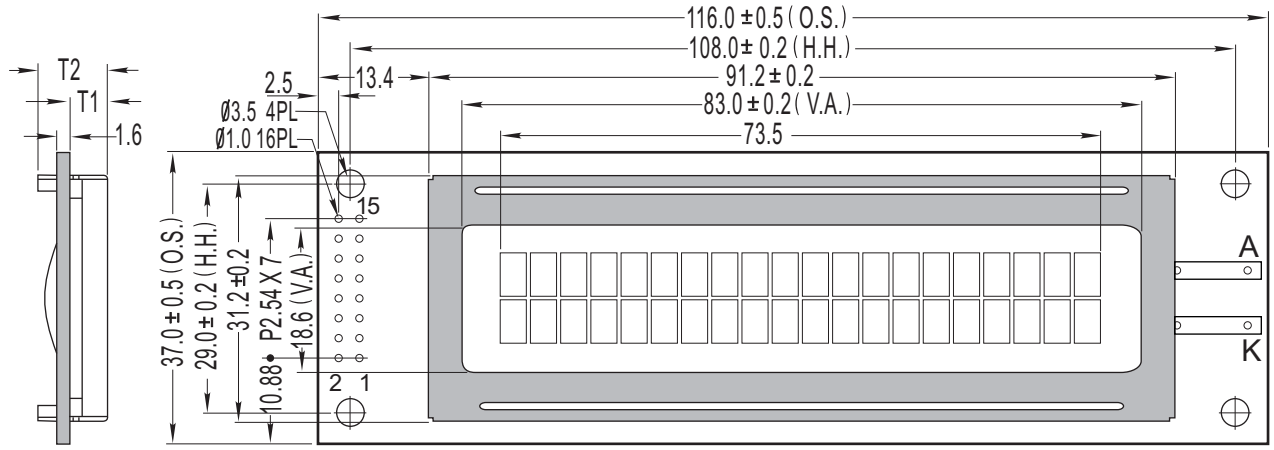

* O.S.=Overall Size
* V.A.=Viewing Area
* H.H.=Hole -Hole

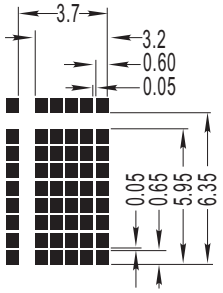

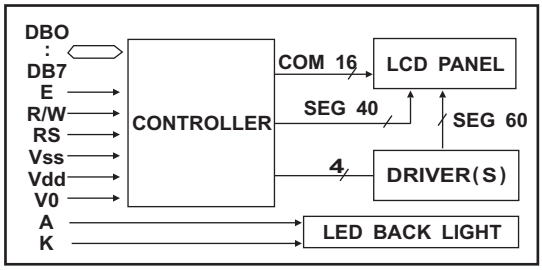

ITEM	T1	T2	UNIT
LED backlight	9.3	13.5	mm
EL or without backlight	4.6	9.5	mm

FEATURE

1. 5X8 dots with cursor
2. Built- in controller (SPLC780D or Equivalent)
3. +5V power supply (Also available for +3.0V)
4. 1/16 duty cycle
5. BKL to be driven by pin1,pin2,or pin15,pin16 or A,K
6. N.V. Optional

ABSOLUTE MAXIMUM RATINGS

ITEM	SYMBOL	MIN	MAX	UNIT
POWER SUPPLY (LOGIC)	Vdd	-0.3	7.0	V
POWER SUPPLY (LCD)	V0	Vdd -13.5	Vdd +0.3	V
INPUT VOLTAGE	Vin	-0.3	Vdd +0.3	V

PIN ASSIGNMENT

PIN	SYMBOL	FUNCTION
1	Vss	GND
2	Vdd	Power Supply
3	V0	Contrast Adjust
4	RS	Register Select Signal
5	R/W	Data Read/Write
6	E	Enable Signal
7-14	DB0-DB7	Data Bus Line
15(A)	LED+	Power supply for BKL(+)
16(K)	LED-	Power supply for BKL(-)

MECHANICAL SPECIFICATIONS

CHARACTER NUMBER	20W X 2H	—
OVERALL SIZE	116.00W X 37.00H	mm
VIEWING AREA	83.00W X 18.60H	mm
HOLE - HOLE	108.00W X 29.00H	mm
CHARACTER SIZE	3.20W X 5.95H	mm
CHARACTER PITCH	0.50W X 0.40H	mm
DOT SIZE	0.60W X 0.65H	mm
DOT PITCH	0.05W X 0.05H	mm

ELECTRONICAL CHARACTERISTICS

ITEM	SYMBOL	CONDITION	STANDARD			UNIT
			MIN	TYP	MAX	
Input voltage	Vdd	+5V	4.7	5.0	5.5	V
		+3.3V	2.7	3.0	3.3	V
Supply current	Idd	Vdd=5V	---	2.5	4.0	mA
Recommended LCD driving voltage for normal temp version module	Vdd-V0	0 °C	4.7	5.0	5.5	V
		25 °C	4.3	4.5	4.7	
		50 °C	4.1	4.3	4.5	
LED forward voltage	V_F	25 °C	---	4.2	4.6	V
LED forward current	I_F	25 °C	---	140	---	mA
EL power supply current	EL	AC 400Hz V_{EL} =110V	----	---	---	mA

DISPLAY CHARACTER ADDRESS CODE

Display position	1	2	3	4	5	--	--	--	--	--	--	--	--	--	--	--	--	18	19	20
DDRAM address	00	01	02	--	--	--	--	--										11	12	13
DDRAM address	40	41	42	--	--	--	--	--										51	52	53

FORDATA ELECTRONIC CO.,LTD

PROFESSIONAL LCD SUPPLIER FROM CHINA

FDCC2004B

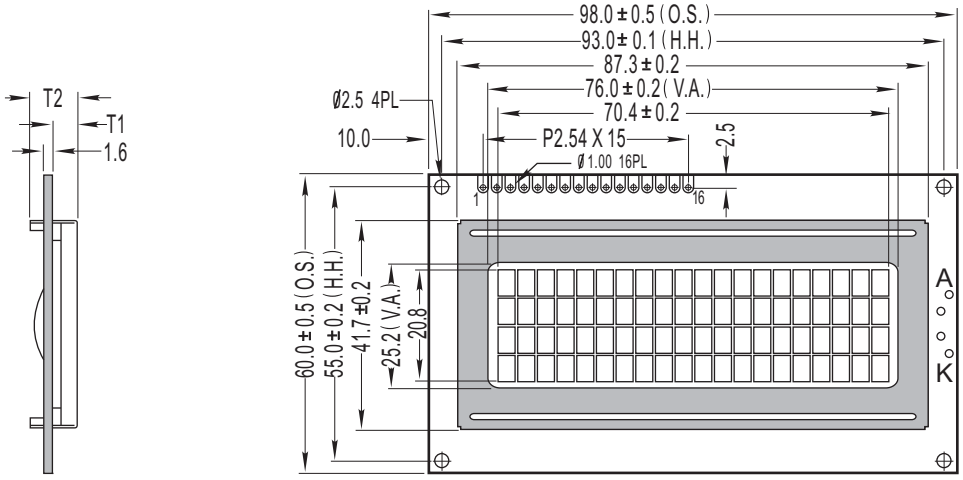

* O.S.=Overall Size
* V.A.=Viewing Area
* H.H.=Hole -Hole

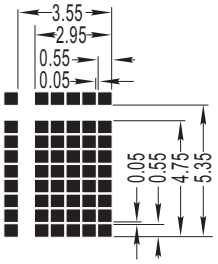

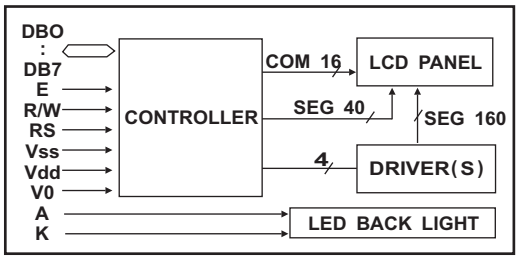

ITEM	T1	T2	UNIT
LED backlight	9.3	14.0	mm
EL or without backlight	4.6	9.5	mm

FEATURE

1. 5X8 dots with cursor
2. Built- in controller (SPLC780D or Equivalent)
3. +5V power supply (Also available for +3.0V)
4. 1/16 duty cycle
5. BKL to be driven by pin1,pin2,or pin15,pin16 or A,K
6. N.V. Optional

ABSOLUTE MAXIMUM RATINGS

ITEM	SYMBOL	MIN	MAX	UNIT
POWER SUPPLY (LOGIC)	Vdd	-0.3	7.0	V
POWER SUPPLY (LCD)	V0	Vdd -13.5	Vdd +0.3	V
INPUT VOLTAGE	Vin	-0.3	Vdd +0.3	V

PIN ASSIGNMENT

PIN	SYMBOL	FUNCTION
1	Vss	GND
2	Vdd	Power Supply
3	V0	Contrast Adjust
4	RS	Register Select Signal
5	R/W	Data Read/Write
6	E	Enable Signal
7-14	DB0-DB7	Data Bus Line
15(A)	LED+	Power supply for BKL(+)
16(K)	LED-	Power supply for BKL(-)

MECHANICAL SPECIFICATIONS

CHARACTER NUMBER	20W X 4H	—
OVERALL SIZE	98.00W X 60.00H	mm
VIEWING AREA	76.00W X 25.20H	mm
HOLE - HOLE	93.00W X 55.00H	mm
CHARACTER SIZE	2.95W X 4.75H	mm
CHARACTER PITCH	0.60W X 0.60H	mm
DOT SIZE	0.55W X 0.55H	mm
DOT PITCH	0.05W X 0.05H	mm

ELECTRONICAL CHARACTERISTICS

ITEM	SYMBOL	CONDITION	STANDARD			UNIT
			MIN	TYP	MAX	
Input voltage	Vdd	+5V	4.7	5.0	5.5	V
		+3.3V	2.7	3.0	3.3	V
Supply current	Idd	Vdd=5V	---	3.0	5.0	mA
Recommended LCD driving voltage for normal temp version module	Vdd-V0	0 °C	4.7	5.0	5.5	V
		25 °C	4.3	4.5	4.7	
		50 °C	4.1	4.3	4.5	
LED forward voltage	V_F	25 °C	---	4.2	4.6	V
LED forward current	I_F	25 °C	---	240	---	mA

DISPLAY CHARACTER ADDRESS CODE

Display position 1 2 3 4 -- -- -- -- --	*19*	*20*
DDRAM address 00 01 02 -- -- -- -- --	*12*	*13*
DDRAM address 40 41 42 -- -- -- -- --	*52*	*53*
DDRAM address 14 15 16 -- -- -- -- --	*26*	*27*
DDRAM address 54 55 56 -- -- -- -- --	*66*	*67*

FORDATA ELECTRONIC CO.,LTD

PROFESSIONAL LCD SUPPLIER FROM CHINA

FDCC2004C

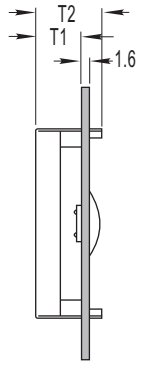

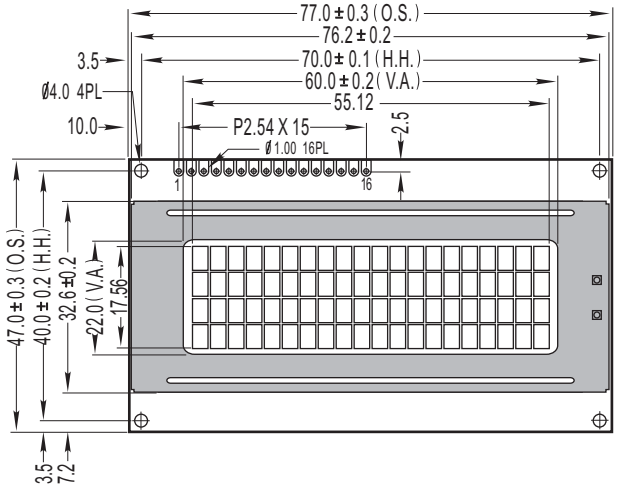

* O.S.=Overall Size
* V.A.=Viewing Area
* H.H.=Hole -Hole

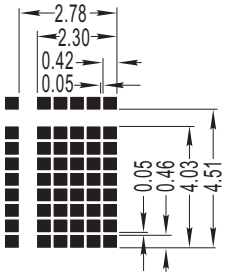

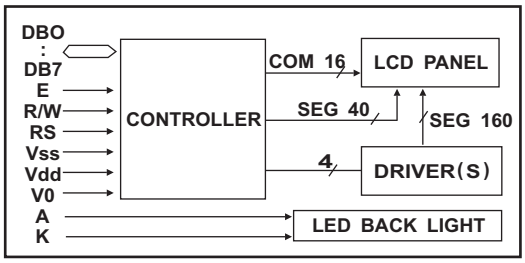

ITEM	T1	T2	UNIT
LED backlight	9.6	14.5	mm
EL or without backlight	5.0	9.5	mm

FEATURE

1. 5X8 dots with cursor
2. Built- in controller (SPLC780D or Equivalent)
3. +5V power supply (Also available for +3.0V)
4. 1/16 duty cycle
5. BKL to be driven by pin1,pin2,or pin15,pin16 or A,K
6. N.V. Optional

MECHANICAL SPECIFICATIONS

CHARACTER NUMBER	20W X 4H	—
OVERALL SIZE	77.00W X 47.00H	mm
VIEWING AREA	60.00W X 22.00H	mm
HOLE - HOLE	70.00W X 40.00H	mm
CHARACTER SIZE	2.30W X 4.03H	mm
CHARACTER PITCH	0.48W X 0.48H	mm
DOT SIZE	0.42W X 0.46H	mm
DOT PITCH	0.05W X 0.05H	mm

ABSOLUTE MAXIMUM RATINGS

ITEM	SYMBOL	MIN	MAX	UNIT
POWER SUPPLY (LOGIC)	Vdd	-0.3	7.0	V
POWER SUPPLY (LCD)	V0	Vdd -13.5	Vdd +0.3	V
INPUT VOLTAGE	Vin	-0.3	Vdd +0.3	V

ELECTRONICAL CHARACTERISTICS

ITEM	SYMBOL	CONDITION	STANDARD			UNIT
			MIN	TYP	MAX	
Input voltage	Vdd	+5V	4.7	5.0	5.5	V
		+3.3V	2.7	3.0	3.3	V
Supply current	Idd	Vdd=5V	---	1.5	3.5	mA
Recommended LCD driving voltage for normal temp version module	Vdd-V0	0 °C	4.7	5.0	5.5	V
		25 °C	4.3	4.5	4.7	
		50 °C	4.1	4.3	4.5	
LED forward voltage	V_F	25 °C	---	4.2	4.6	V
LED forward current	I_F	25 °C	---	150	---	mA

PIN ASSIGNMENT

PIN	SYMBOL	FUNCTION
1	Vss	GND
2	Vdd	Power Supply
3	V0	Contrast Adjust
4	RS	Register Select Signal
5	R/W	Data Read/Write
6	E	Enable Signal
7-14	DB0-DB7	Data Bus Line
15(A)	LED+	Power supply for BKL(+)
16(K)	LED-	Power supply for BKL(-)

DISPLAY CHARACTER ADDRESS CODE

Display position 1 2 3 4 -- -- -- -- --	*19*	*20*
DDRAM address 00 01 02 -- -- -- -- --	*12*	*13*
DDRAM address 40 41 42 -- -- -- -- --	*52*	*53*
DDRAM address 14 15 16 -- -- -- -- --	*26*	*27*
DDRAM address 54 55 56 -- -- -- -- --	*66*	*67*

FORDATA ELECTRONIC CO.,LTD

PROFESSIONAL LCD SUPPLIER FROM CHINA

FDCC2004D

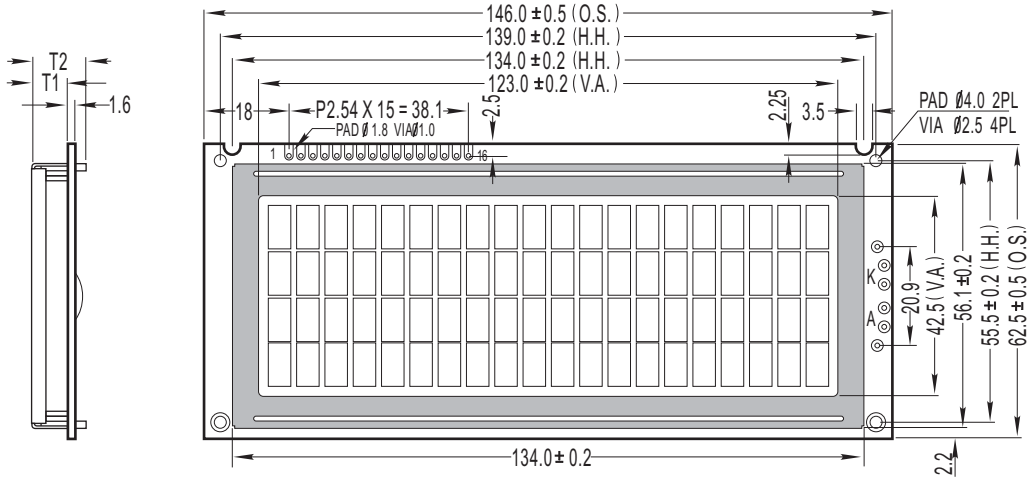

* O.S.=Overall Size
* V.A.=Viewing Area
* H.H.=Hole -Hole

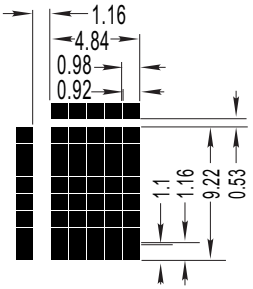

ITEM	T1	T2	UNIT
LED backlight	9.4	14.5	mm
EL or without backlight	5.6	10.5	mm

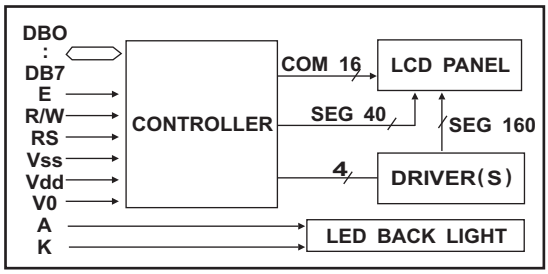

FEATURE

1. 5X8 dots with cursor
2. Built- in controller (SPLC780D or Equivalent)
3. +5V power supply (Also available for +3.0V)
4. 1/16 duty cycle
5. BKL to be driven by pin1,pin2,or pin15,pin16
6. N.V. Optional

ABSOLUTE MAXIMUM RATINGS

ITEM	SYMBOL	MIN	MAX	UNIT
POWER SUPPLY (LOGIC)	Vdd	-0.3	7.0	V
POWER SUPPLY (LCD)	V0	Vdd -13.5	Vdd +0.3	V
INPUT VOLTAGE	Vin	-0.3	Vdd +0.3	V

PIN ASSIGNMENT

PIN	SYMBOL	FUNCTION
1	Vss	GND
2	Vdd	Power Supply
3	V0	Contrast Adjust
4	RS	Register Select Signal
5	R/W	Data Read/Write
6	E	Enable Signal
7-14	DB0-DB7	Data Bus Line
15(A)	LED+	Power supply for BKL(+)
16(K)	LED-	Power supply for BKL(-)

MECHANICAL SPECIFICATIONS

CHARACTER NUMBER	20W X 4H	—
OVERALL SIZE	146.00W X 62.50H	mm
VIEWING AREA	123.00W X 42.50H	mm
HOLE - HOLE	139.0/134.0W X 55.5H	mm
CHARACTER SIZE	4.84W X 9.22H	mm
CHARACTER PITCH	1.16W X 0.53H	mm
DOT SIZE	0.92W X 1.10H	mm
DOT PITCH	0.06W X 0.06H	mm

ELECTRONICAL CHARACTERISTICS

ITEM	SYMBOL	CONDITION	STANDARD			UNIT
			MIN	TYP	MAX	
Input voltage	Vdd	+5V	4.7	5.0	5.5	V
		+3.3V	2.7	3.0	3.3	V
Supply current	Idd	Vdd=5V	---	1.7	2.0	mA
Recommended LCD driving voltage for normal temp version module	Vdd-V0	0 °C	4.7	5.0	5.5	V
		25 °C	4.3	4.5	4.7	
		50 °C	4.1	4.3	4.5	
LED forward voltage	V_F	25 °C	---	4.2	4.6	V
LED forward current	I_F	25 °C	---	240	---	mA

DISPLAY CHARACTER ADDRESS CODE

Display position	*1 2 3 4 -- -- -- -- --*	*19 20*
DDRAM address	*00 01 02 -- -- -- -- --*	*12 13*
DDRAM address	*40 41 42 -- -- -- -- --*	*52 53*
DDRAM address	*14 15 16 -- -- -- -- --*	*26 27*
DDRAM address	*54 55 56 -- -- -- -- --*	*66 67*

FORDATA ELECTRONIC CO.,LTD

PROFESSIONAL LCD SUPPLIER FROM CHINA

FDCC2004F

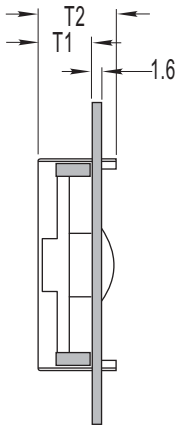

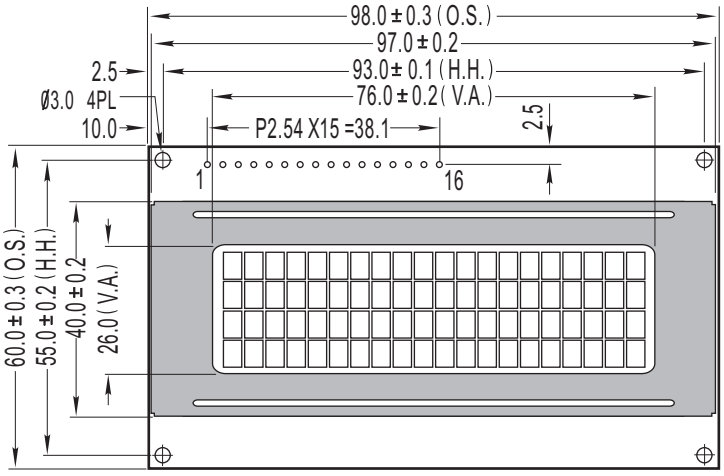

* O.S.=Overall Size
* V.A.=Viewing Area
* H.H.=Hole -Hole

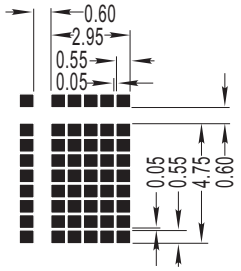

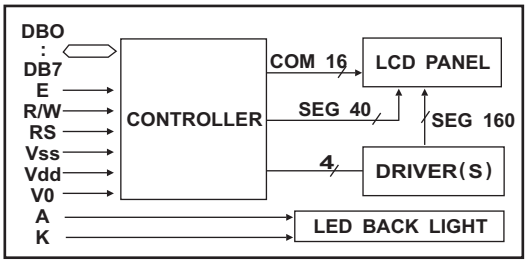

ITEM	T1	T2	UNIT
LED backlight	9.8	14.5	mm
EL or without backlight	4.6	9.5	mm

FEATURE

1. 5X8 dots with cursor
2. Built- in controller (SPLC780D or Equivalent)
3. +5V power supply (Also available for +3.0V)
4. 1/16 duty cycle
5. BKL to be driven by pin1,pin2,or pin15,pin16
6. N.V. Optional

ABSOLUTE MAXIMUM RATINGS

ITEM	SYMBOL	MIN	MAX	UNIT
POWER SUPPLY (LOGIC)	Vdd	-0.3	7.0	V
POWER SUPPLY (LCD)	V0	Vdd -13.5	Vdd +0.3	V
INPUT VOLTAGE	Vin	-0.3	Vdd +0.3	V

PIN ASSIGNMENT

PIN	SYMBOL	FUNCTION
1	Vss	GND
2	Vdd	Power Supply
3	V0	Contrast Adjust
4	RS	Register Select Signal
5	R/W	Data Read/Write
6	E	Enable Signal
7-14	DB0-DB7	Data Bus Line
15	LED+	Power supply for BKL(+)
16	LED-	Power supply for BKL(-)

MECHANICAL SPECIFICATIONS

CHARACTER NUMBER	20W X 4H	—
OVERALL SIZE	98.00W X 60.00H	mm
VIEWING AREA	76.00W X 26.00H	mm
HOLE - HOLE	93.00W X 55.00H	mm
CHARACTER SIZE	2.95W X 4.75H	mm
CHARACTER PITCH	0.60W X 0.60H	mm
DOT SIZE	0.55W X 0.55H	mm
DOT PITCH	0.05W X 0.05H	mm

ELECTRONICAL CHARACTERISTICS

ITEM	SYMBOL	CONDITION	STANDARD			UNIT
			MIN	TYP	MAX	
Input voltage	Vdd	+5V	4.7	5.0	5.5	V
		+3.3V	2.7	3.0	3.3	V
Supply current	Idd	Vdd=5V	---	1.5	3.5	mA
Recommended LCD driving voltage for normal temp version module	Vdd-V0	0 °C	4.7	5.0	5.5	V
		25 °C	4.3	4.5	4.7	
		50 °C	4.1	4.3	4.5	
LED forward voltage	V_F	25 °C	---	4.2	4.6	V
LED forward current	I_F	25 °C	---	150	---	mA

DISPLAY CHARACTER ADDRESS CODE

Display position 1 2 3 4 -- -- -- -- --	19	20
DDRAM address 00 01 02 -- -- -- -- --	12	13
DDRAM address 40 41 42 -- -- -- -- --	52	53
DDRAM address 14 15 16 -- -- -- -- --	26	27
DDRAM address 54 55 56 -- -- -- -- --	66	67

FORDATA ELECTRONIC CO.,LTD
PROFESSIONAL LCD SUPPLIER FROM CHINA

FDCC2402E

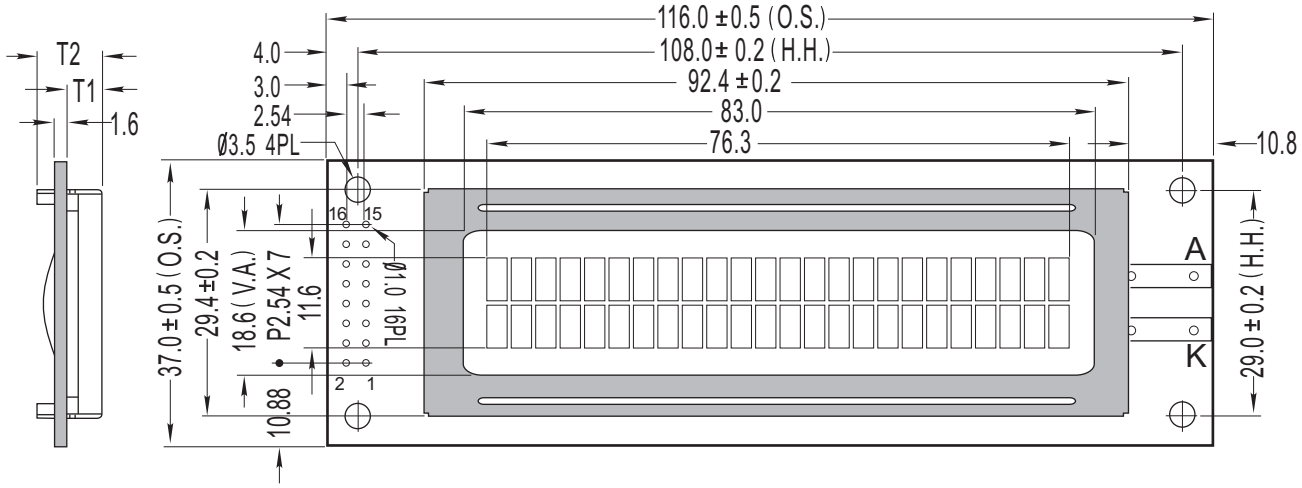

* O.S.=Overall Size
* V.A.=Viewing Area
* H.H.=Hole -Hole

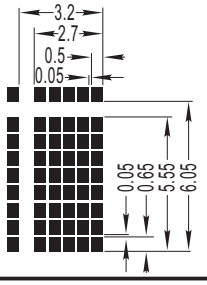

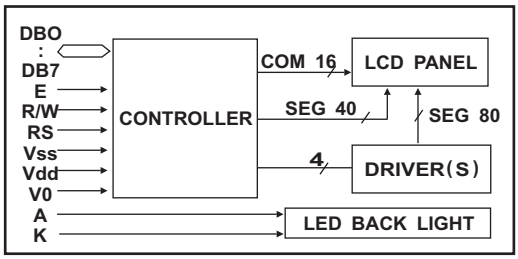

ITEM	T1	T2	UNIT
LED backlight	9.3	13.5	mm
EL or without backlight	4.6	9.5	mm

FEATURE

1. 5X8 dots with cursor
2. Built- in controller (SPLC780D or Equivalent)
3. +5V power supply (Also available for +3.0V)
4. 1/16 duty cycle
5. BKL to be driven by pin1,pin2,or pin15,pin16 or A,K
6. N.V. Optional

ABSOLUTE MAXIMUM RATINGS

ITEM	SYMBOL	MIN	MAX	UNIT
POWER SUPPLY (LOGIC)	Vdd	-0.3	7.0	V
POWER SUPPLY (LCD)	V0	Vdd -13.5	Vdd +0.3	V
INPUT VOLTAGE	Vin	-0.3	Vdd +0.3	V

PIN ASSIGNMENT

PIN	SYMBOL	FUNCTION
1	Vss	GND
2	Vdd	Power Supply
3	V0	Contrast Adjust
4	RS	Register Select Signal
5	R/W	Data Read/Write
6	E	Enable Signal
7-14	DB0-DB7	Data Bus Line
15(A)	LED+	Power supply for BKL(+)
16(K)	LED-	Power supply for BKL(-)

MECHANICAL SPECIFICATIONS

CHARACTER NUMBER	24W X 2H	—
OVERALL SIZE	116.00W X 37.00H	mm
VIEWING AREA	83.00W X 18.60H	mm
HOLE - HOLE	108.00W X 29.00H	mm
CHARACTER SIZE	2.70W X 5.55H	mm
CHARACTER PITCH	0.50W X 0.50H	mm
DOT SIZE	0.50W X 0.65H	mm
DOT PITCH	0.05W X 0.05H	mm

ELECTRONICAL CHARACTERISTICS

ITEM	SYMBOL	CONDITION	STANDARD			UNIT
			MIN	TYP	MAX	
Input voltage	Vdd	+5V	4.7	5.0	5.5	V
		+3.3V	2.7	3.0	3.3	V
Supply current	Idd	Vdd=5V	---	3.0	5.0	mA
Recommended LCD driving voltage for normal temp version module	Vdd-V0	0 °C	4.7	5.0	5.5	V
		25 °C	4.3	4.5	4.7	
		50 °C	4.1	4.3	4.5	
LED forward voltage	V_F	25 °C	---	4.2	4.6	V
LED forward current	I_F	25 °C	---	300	---	mA
EL power supply current	EL	AC 400Hz V_{EL} =110V	----	---	---	mA

DISPLAY CHARACTER ADDRESS CODE

Display position	*1*	*2*	*3*	--	--	--	--	--	*23*	*24*
DDRAM address	*00*	*01*	*02*	--	--	--	--	--	*16*	*17*
DDRAM address	*40*	*41*	*42*	--	--	--	--	--	*56*	*57*

FORDATA ELECTRONIC CO.,LTD

PROFESSIONAL LCD SUPPLIER FROM CHINA

FDCC4002B

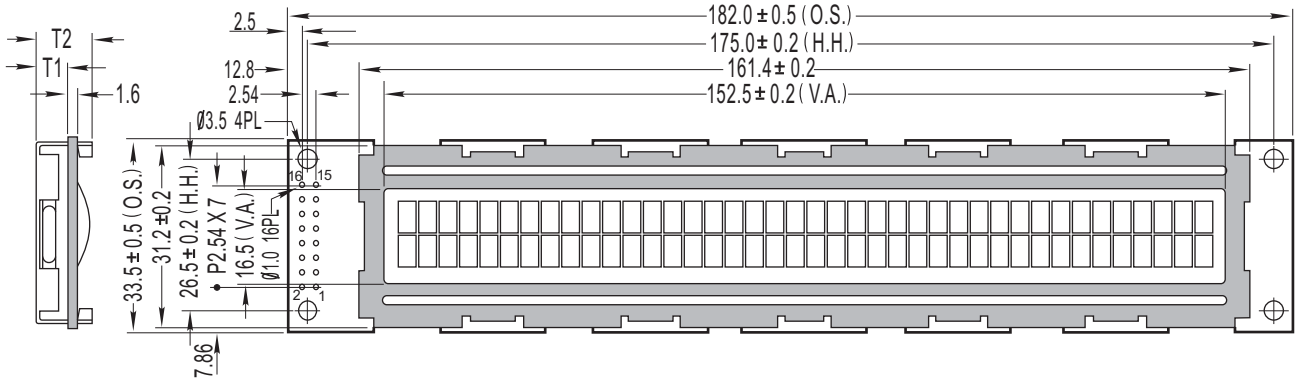

* O.S.=Overall Size
* V.A.=Viewing Area
* H.H.=Hole -Hole

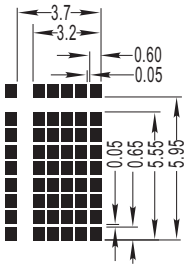

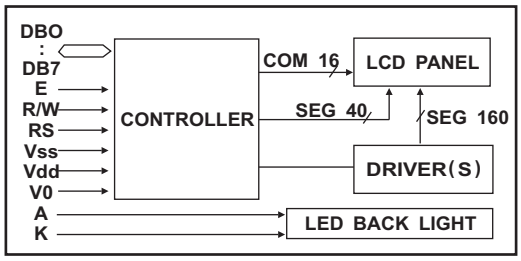

ITEM	T1	T2	UNIT
LED backlight	9.3	14.0	mm
EL or without backlight	5.4	11.0	mm

FEATURE

1. 5X8 dots with cursor
2. Built- in controller (SPLC780D or Equivalent)
3. +5V power supply (Also available for +3.0V)
4. 1/16 duty cycle
5. BKL to be driven by pin1,pin2,or pin15,pin16
6. N.V. Optional

ABSOLUTE MAXIMUM RATINGS

ITEM	SYMBOL	MIN	MAX	UNIT
POWER SUPPLY (LOGIC)	Vdd	-0.3	7.0	V
POWER SUPPLY (LCD)	V0	Vdd -13.5	Vdd +0.3	V
INPUT VOLTAGE	Vin	-0.3	Vdd +0.3	V

PIN ASSIGNMENT

PIN	SYMBOL	FUNCTION
1	Vss	GND
2	Vdd	Power Supply
3	V0	Contrast Adjust
4	RS	Register Select Signal
5	R/W	Data Read/Write
6	E	Enable Signal
7-14	DB0-DB7	Data Bus Line
15	LED+	Power supply for BKL(+)
16	LED-	Power supply for BKL(-)

MECHANICAL SPECIFICATIONS

CHARACTER NUMBER	40W X 2H	—
OVERALL SIZE	182.00W X 33.50H	mm
VIEWING AREA	152.50W X 16.50H	mm
HOLE - HOLE	175.00W X 26.50H	mm
CHARACTER SIZE	3.20W X 5.55H	mm
CHARACTER PITCH	0.50W X 0.40H	mm
DOT SIZE	0.60W X 0.65H	mm
DOT PITCH	0.05W X 0.05H	mm

ELECTRONICAL CHARACTERISTICS

ITEM	SYMBOL	CONDITION	STANDARD			UNIT
			MIN	TYP	MAX	
Input voltage	Vdd	+5V	4.7	5.0	5.5	V
		+3.3V	2.7	3.0	3.3	V
Supply current	Idd	Vdd=5V	---	3.0	5.0	mA
Recommended LCD driving voltage for normal temp version module	Vdd-V0	0 °C	4.7	5.0	5.5	V
		25 °C	4.3	4.5	4.7	
		50 °C	4.1	4.3	4.5	
LED forward voltage	V_F	25 °C	---	4.2	4.6	V
LED forward current	I_F	25 °C	---	300	---	mA
EL power supply current	EL	AC 400Hz V_{EL} =110V	----	---	---	mA

DISPLAY CHARACTER ADDRESS CODE

Display position 1 2 3 4 5 6 -- -- -- -- -- --	*40*
DDRAM address 00 01 02 -- -- -- -- -- --	*27*
DDRAM address 40 41 42 -- -- -- -- -- --	*67*

FORDATA ELECTRONIC CO.,LTD

PROFESSIONAL LCD SUPPLIER FROM CHINA

FDCC4004A

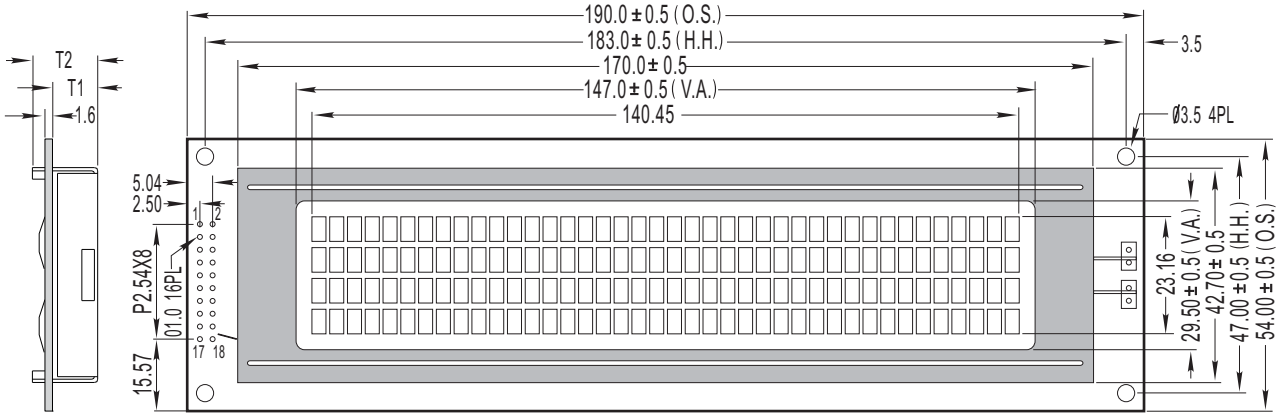

* O.S.=Overall Size
* V.A.=Viewing Area
* H.H.=Hole -Hole

ITEM	T1	T2	UNIT
LED backlight	8.9	13.0	mm
EL or without backlight	5.4	10.0	mm

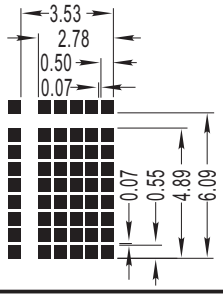

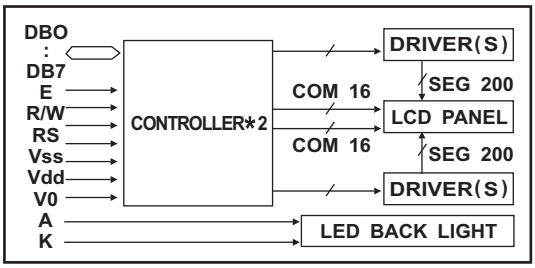

FEATURE

1. 5X8 dots with cursor
2. Built- in controller (SPLC780D or Equivalent)
3. +5V power supply (Also available for +3.0V)
4. 1/16 duty cycle
5. BKL to be driven by pin1,pin2,or pin15,pin16 or A,K
6. N.V. Optional

MECHANICAL SPECIFICATIONS

CHARACTER NUMBER	40W X 4H	—
OVERALL SIZE	190.00W X 54.00H	mm
VIEWING AREA	147.00W X 29.50H	mm
HOLE - HOLE	183.00W X 47.00H	mm
CHARACTER SIZE	2.78W X 4.89H	mm
CHARACTER PITCH	0.75W X 1.20H	mm
DOT SIZE	0.50W X 0.55H	mm
DOT PITCH	0.07W X 0.07H	mm

ABSOLUTE MAXIMUM RATINGS

ITEM	SYMBOL	MIN	MAX	UNIT
POWER SUPPLY (LOGIC)	Vdd	-0.3	7.0	V
POWER SUPPLY (LCD)	V0	Vdd -13.5	Vdd +0.3	V
INPUT VOLTAGE	Vin	-0.3	Vdd +0.3	V

ELECTRONICAL CHARACTERISTICS

ITEM	SYMBOL	CONDITION	STANDARD			UNIT
			MIN	TYP	MAX	
Input voltage	Vdd	+5V	4.7	5.0	5.5	V
		+3.6V	2.7	3.6	4.5	V
		+3.0V	2.7	3.0	4.5	V
Supply current	Idd	Vdd=5V	---	3.5	4.0	mA
Recommended LCD driving voltage for normal temp version module	Vdd-V0	0 °C	4.5	---	4.9	V
		25 °C	4.3	4.5	4.8	
		50 °C	4.2	---	4.8	
LED forward voltage	V_F	25 °C	3.8	---	4.4	V
LED forward current	I_F	25 °C	---	480	---	mA
EL power supply current	EL	AC 400Hz V_{EL} =110V	----	---	---	mA

PIN ASSIGNMENT

PIN	SYMBOL	FUNCTION
1-8	DB7-DB0	Data bus line
9	E1	Enable Signal
10	R/W	Data Read/Write
11	RS	Register Select Signal
12	V0	Contrast Adjust
13	Vss	GND
14	Vdd	Power supply for LCM(+5.0V)
15	E2	Enable Signal
16	NC	No connection
17	LED+	Power supply for BKL(+5.0V)
18	LED-	Power supply for BKL(0V)

DISPLAY CHARACTER ADDRESS CODE

Display position	*1*	*2*	*3*	*4*	*5*	*6*	*7*	*8*	*9*	*10*	*11*	*12*	*13*	*14*	*15*	*16*
DDRAM address	*00*	*01*	*02*	--	--	--	--	--								*0F*
DDRAM address	*40*	*41*	*42*	--	--	--	--	--								*4F*

FORDATA ELECTRONIC CO.,LTD

PROFESSIONAL LCD SUPPLIER FROM CHINA

FDCG12232D

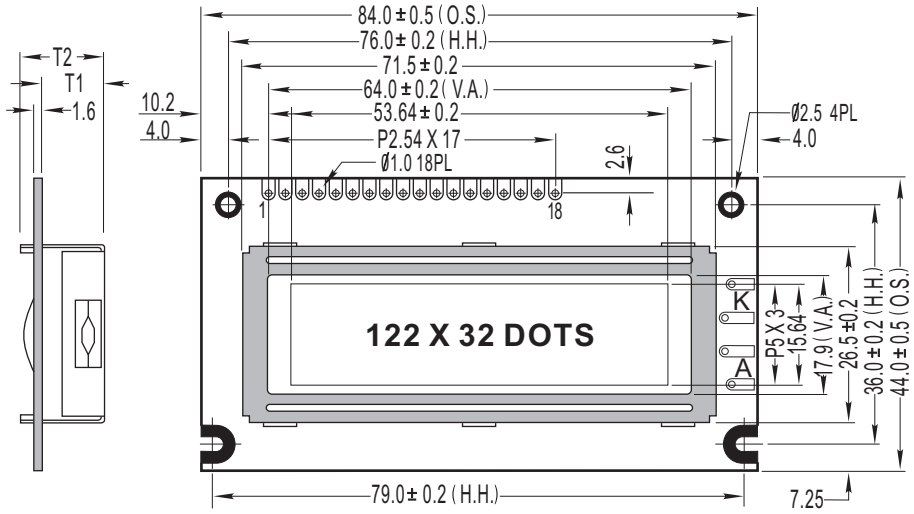

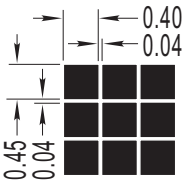

* O.S.=Overall Size V.A.=Viewing Area H.H.=Hole -Hole

ITEM	T1	T2	UNIT
LED backlight	9.4	15.0	mm
EL or without backlight	4.8	10.0	mm

BLOCK DIAGRAM

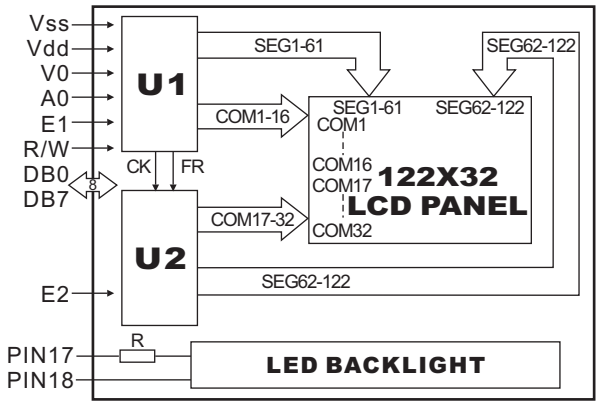

FEATURE

1. 122X32 dots graphic LCD module
2. Built- in controller (SED1520D0A)
3. +5V power supply
4. STN LCD panel, 1/32 duty cycle

MECHANICAL SPECIFICATIONS

DOT NUMBER	122W X 32H	—
OVERALL SIZE	84.00W X 44.00H	mm
VIEWING AREA	64.00W X 17.90H	mm
HOLE - HOLE	79.50/76.00W X 36.00H	mm
DOT SIZE	0.40W X 0.45H	mm
DOT PITCH	0.04W X 0.04H	mm

PIN ASSIGNMENT

PIN	SYMBOL	FUNCTION
1	Vss	GND
2	Vdd	Power Supply
3	V0	Contrast Adjust
4	RST	H/L Reset signal
5	E1	Chip enable signal
6	E2	Chip enable signal
7	R/W	H/L Read/write
8	A0	H/L H:Data L:Instruction code
9 to 16	DB0 to DB7	H/L Data bus line
17(A)	LED+	Power supply for BKL(+)
18(K)	LED-	Power supply for BKL(-)

ABSOLUTE MAXIMUM RATINGS

ITEM	SYMBOL	MIN	MAX	UNIT
POWER SUPPLY (LOGIC)	Vdd	-0.3	7.0	V
POWER SUPPLY (LCD)	V0	Vdd -13.5	Vdd +0.3	V
INPUT VOLTAGE	Vin	-0.3	Vdd +0.3	V

ELECTRONICAL CHARACTERISTICS

ITEM	SYMBOL	CONDITION	STANDARD			UNIT
			MIN	TYP	MAX	
Input voltage	Vdd	+5V	4.7	5.0	5.5	V
Supply current	Idd	Vdd=5V	---	2.5	---	mA
Recommended LCD driving voltage for normal temp version module	Vdd-V0	0 °C	4.7	5.0	5.5	V
		25 °C	4.3	4.5	4.7	
		50 °C	4.1	4.3	4.5	
LED forward voltage	V_F	25 °C	---	4.2	4.5	V
LED forward current	I_F	25 °C	---	120	---	mA

FORDATA ELECTRONIC CO.,LTD

PROFESSIONAL LCD SUPPLIER FROM CHINA

FDCG12232G

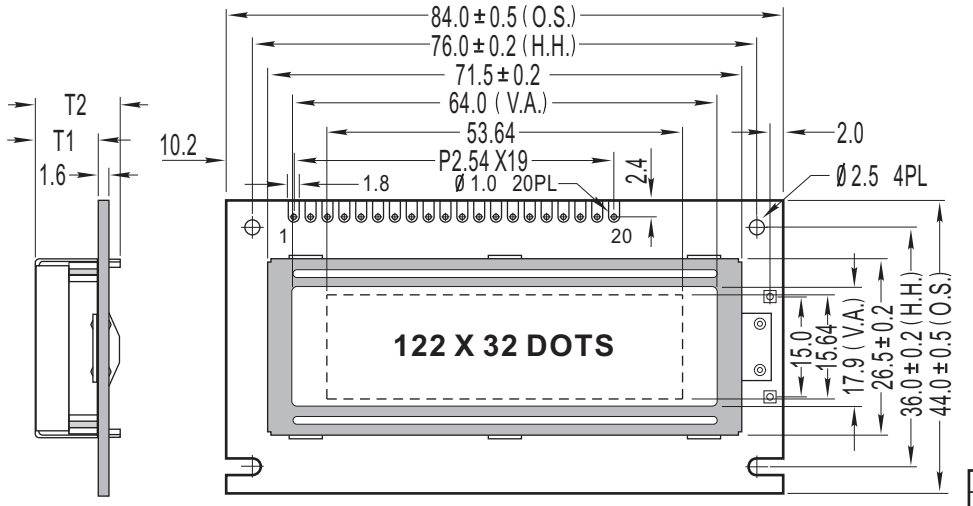

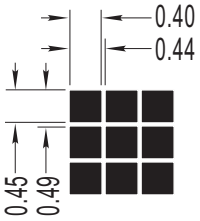

ITEM	T1	T2	UNIT
LED backlight	9.4	15.0	mm
EL or without backlight	4.8	10.0	mm

* O.S.=Overall Size V.A.=Viewing Area H.H.=Hole -Hole

BLOCK DIAGRAM

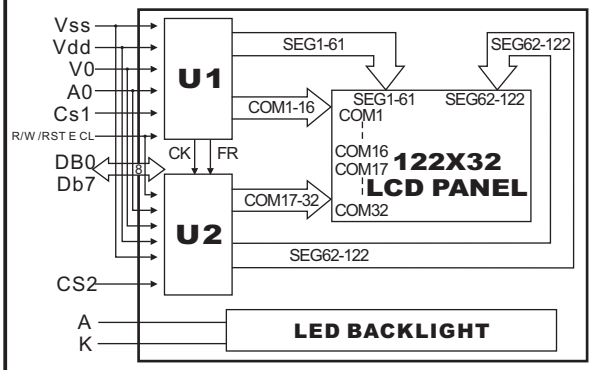

FEATURE

1. 122X32 dots graphic LCD module
2. Built- in controller (SED1520DAA)
3. +5V power supply
4. STN LCD panel, 1/32 duty cycle

MECHANICAL SPECIFICATIONS

DOT NUMBER	122W X 32H	—
OVERALL SIZE	84.00W X 44.00H	mm
VIEWING AREA	64.00W X 17.90H	mm
HOLE - HOLE	76.00W X 36.00H	mm
DOT SIZE	0.40W X 0.45H	mm
DOT PITCH	0.04W X 0.04H	mm

PIN ASSIGNMENT

PIN	SYMBOL	FUNCTION
1	Vss	GND
2	Vdd	Power Supply
3	V0	Contrast Adjust
4	A0	H/L H:Data L:Instruction code
5	CS1	Chip enable signal
6	CS2	Chip enable signal
7	CL	Clock input (2KHz)
8	E	Enable Signal
9	R/W	H/L Read/write
10 to17	DB0 to DB7	H/L Data bus line
18	RST	H/L Reset signal
19(A)	LED+	Power supply for BKL(+)
20(K)	LED-	Power supply for BKL(-)

ABSOLUTE MAXIMUM RATINGS

ITEM	SYMBOL	MIN	MAX	UNIT
POWER SUPPLY (LOGIC)	Vdd	-0.3	7.0	V
POWER SUPPLY (LCD)	V0	Vdd -13.5	Vdd +0.3	V
INPUT VOLTAGE	Vin	-0.3	Vdd +0.3	V

ELECTRONICAL CHARACTERISTICS

ITEM	SYMBOL	CONDITION	STANDARD			UNIT
			MIN	TYP	MAX	
Input voltage	Vdd	+5V	3.0	5.0	5.5	V
Supply current	Idd	Vdd=5V	---	1.0	---	mA
Recommended LCD driving voltage for normal temp version module	Vdd-V0	0 °C	---	4.8	---	V
		25 °C	---	4.6	---	
		50 °C	---	4.4	---	
LED forward voltage	V_F	25 °C	---	4.2	4.5	V
LED forward current	I_F	25 °C	---	120	---	mA

FORDATA ELECTRONIC CO.,LTD

PROFESSIONAL LCD SUPPLIER FROM CHINA

FDCG12864B

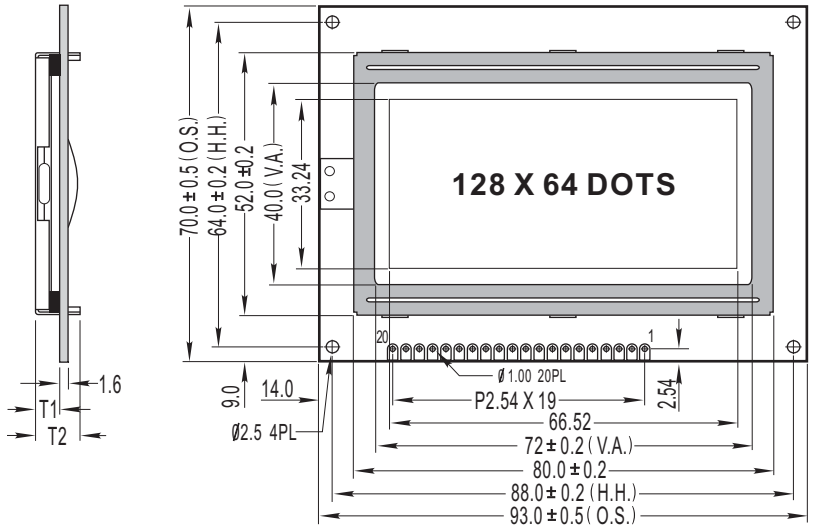

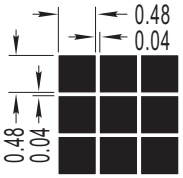

ITEM	T1	T2	UNIT
LED backlight	8.7	13.0	mm
EL or without backlight	4.6	9.0	mm

* O.S.=Overall Size V.A.=Viewing Area H.H.=Hole -Hole

BLOCK DIAGRAM

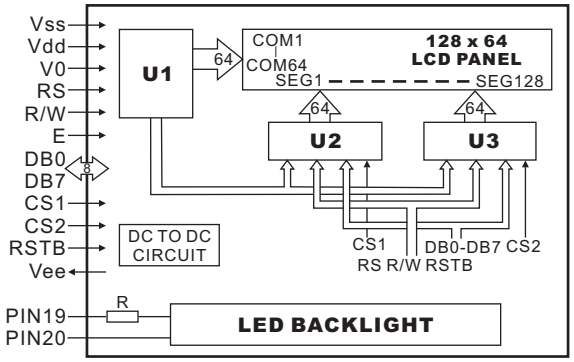

FEATURE

1. 128X64 dots graphic LCD module
2. Built- in controller (KS0108B)
3. +5V power supply
4. STN LCD panel, 1/64 duty cycle

MECHANICAL SPECIFICATIONS

DOT NUMBER	128W X 64H	——
OVERALL SIZE	93.00W X 70.00H	mm
VIEWING AREA	72.00W X 40.00H	mm
HOLE - HOLE	88.00W X 64.00H	mm
DOT SIZE	0.48W X 0.48H	mm
DOT PITCH	0.04W X 0.04H	mm

PIN ASSIGNMENT

PIN	SYMBOL	FUNCTION
1	Vss	GND
2	Vdd	Power Supply
3	V0	Contrast Adjust
4	RS	H/L Rigister select signal
5	R/W	H/L Read/write
6	E	Chip enable signal
7 to 14	DB0 to DB7	H/L Data bus line
15	CS1	Chip select for IC1
16	CS2	Chip select for IC2
17	RST	Reset signal
18	Vee	Negative voltage output
19(A)	LED+	Power supply for BKL(4.2V)
20(K)	LED-	Power supply for BKL(GND)

ABSOLUTE MAXIMUM RATINGS

ITEM	SYMBOL	MIN	MAX	UNIT
POWER SUPPLY (LOGIC)	Vdd	-0.3	7.0	V
POWER SUPPLY (LCD)	V0	Vdd -19.0	Vdd +0.3	V
INPUT VOLTAGE	Vin	-0.3	Vdd +0.3	V

ELECTRONICAL CHARACTERISTICS

ITEM	SYMBOL	CONDITION	STANDARD			UNIT
			MIN	TYP	MAX	
Input voltage	Vdd	+5V	4.7	5.0	5.5	V
Supply current	Idd	Vdd=5V	---	8	---	mA
Recommended LCD driving voltage for normal temp version module	Vdd-V0	0 °C	---	9.8	---	V
		25 °C	---	9.5	---	
		50 °C	---	9.3	---	
LED forward voltage	V_F	25 °C	---	4.2	4.5	V
LED forward current	I_F	25 °C	---	360	---	mA

FORDATA ELECTRONIC CO.,LTD

PROFESSIONAL LCD SUPPLIER FROM CHINA

FDCG12864E

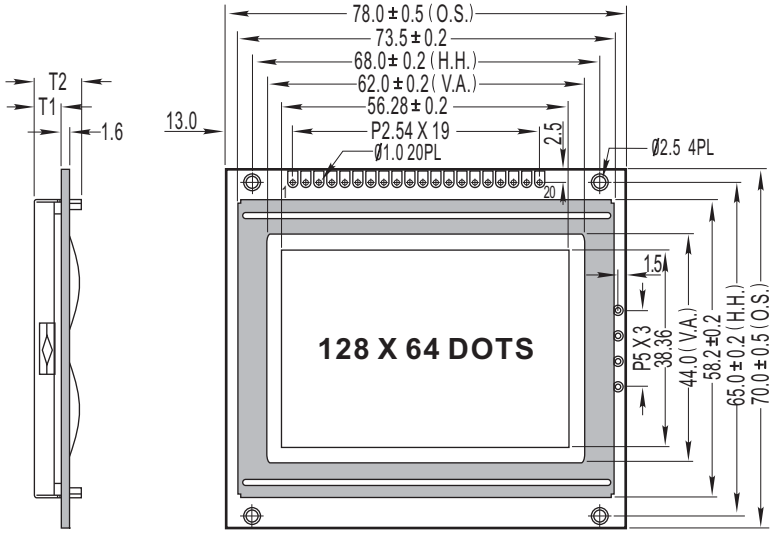

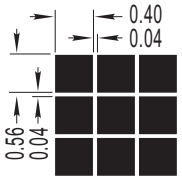

ITEM	T1	T2	UNIT
LED backlight	10.2	15.0	mm
EL or without backlight	5.0	10.0	mm

* O.S.=Overall Size V.A.=Viewing Area H.H.=Hole -Hole

BLOCK DIAGRAM

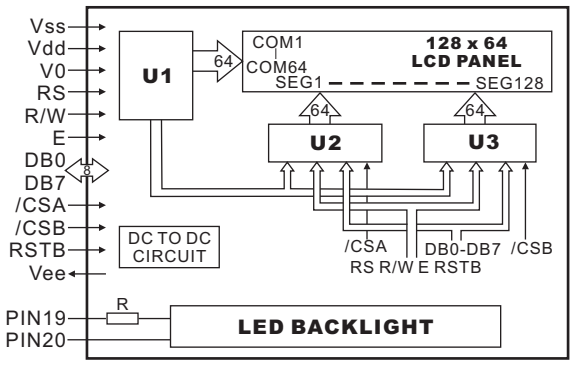

FEATURE

1. 128X64 dots graphic LCD module
2. Built- in controller (KS0108B)
3. +5V power supply
4. STN LCD panel, 1/64 duty cycle

MECHANICAL SPECIFICATIONS

DOT NUMBER	128W X 64H	—
OVERALL SIZE	78.00W X 70.00H	mm
VIEWING AREA	62.00W X 44.00H	mm
HOLE - HOLE	68.00W X 65.00H	mm
DOT SIZE	0.40W X 0.56H	mm
DOT PITCH	0.04W X 0.04H	mm

PIN ASSIGNMENT

PIN	SYMBOL	FUNCTION
1	/CSA	Chip select for IC1
2	/CSB	Chip select for IC2
3	Vss	GND
4	Vdd	Power Supply
5	V0	Contrast Adjust
6	RS	H/L Rigister select signal
7	R/W	H/L Read/write
8	E	Chip enable signal
9 to 16	DB0 to DB7	H/L Data bus line
17	RST	Reset signal
18	Vee	Negative voltage output
19(A)	LED+	Power supply for BKL(4.2V)
20(K)	LED-	Power supply for BKL(GND)

ABSOLUTE MAXIMUM RATINGS

ITEM	SYMBOL	MIN	MAX	UNIT
POWER SUPPLY (LOGIC)	Vdd	-0.3	7.0	V
POWER SUPPLY (LCD)	V0	Vdd -19.0	Vdd +0.3	V
INPUT VOLTAGE	Vin	-0.3	Vdd +0.3	V

ELECTRONICAL CHARACTERISTICS

ITEM	SYMBOL	CONDITION	STANDARD			UNIT
			MIN	TYP	MAX	
Input voltage	Vdd	+5V	4.7	5.0	5.5	V
Supply current	Idd	Vdd=5V	---	8	---	mA
Recommended LCD driving voltage for normal temp version module	Vdd-V0	0 °C	---	9.8	---	V
		25 °C	---	9.5	---	
		50 °C	---	9.3	---	
LED forward voltage	V_F	25 °C	---	4.2	4.5	V
LED forward current	I_F	25 °C	---	360	---	mA

FORDATA ELECTRONIC CO.,LTD

PROFESSIONAL LCD SUPPLIER FROM CHINA

FDCG12864G

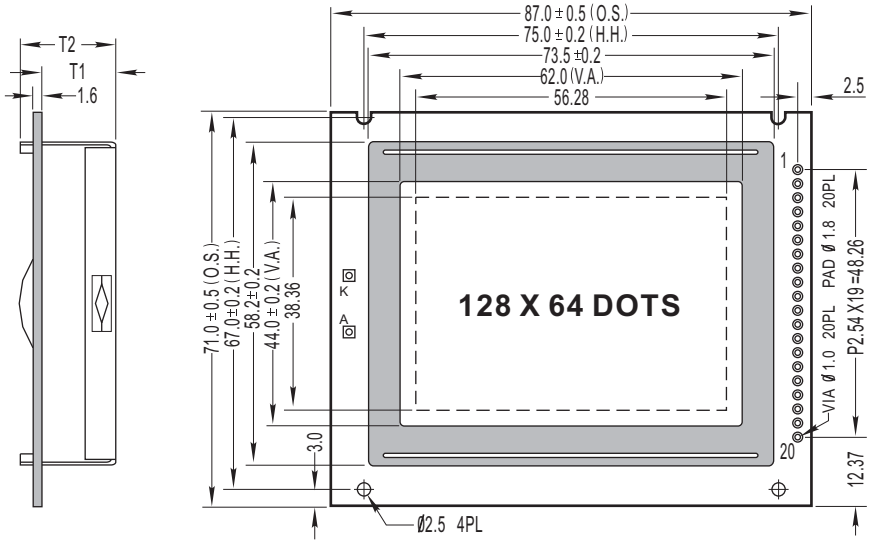

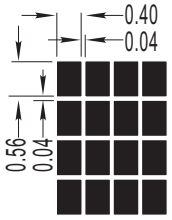

ITEM	T1	T2	UNIT
LED backlight	10.2	15.0	mm
EL or without backlight	5.0	10.0	mm

* O.S.=Overall Size V.A.=Viewing Area H.H.=Hole -Hole

BLOCK DIAGRAM

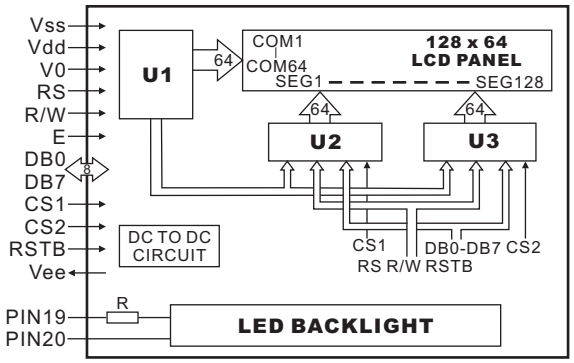

FEATURE

1. 128X64 dots graphic LCD module
2. Built- in controller (KS0108B)
3. +5V power supply
4. STN LCD panel, 1/64 duty cycle

MECHANICAL SPECIFICATIONS

DOT NUMBER	128W X 64H	——
OVERALL SIZE	87.00W X 71.00H	mm
VIEWING AREA	62.00W X 44.00H	mm
HOLE - HOLE	75.00W X 67.00H	mm
DOT SIZE	0.40W X 0.56H	mm
DOT PITCH	0.04W X 0.04H	mm

PIN ASSIGNMENT

PIN	SYMBOL	FUNCTION
1	Vss	GND
2	Vdd	Power Supply
3	V0	Contrast Adjust
4	RS	H/L Rigister select signal
5	R/W	H/L Read/write
6	E	Chip enable signal
7 to 14	DB0 to DB7	H/L Data bus line
15	CS1	Chip select for IC1
16	RST	Reset signal
17	Vee	Negative voltage output
18	CS2	Chip select for IC2
19(A)	LED+	Power supply for BKL(4.2V)
20(K)	LED-	Power supply for BKL(GND)

ABSOLUTE MAXIMUM RATINGS

ITEM	SYMBOL	MIN	MAX	UNIT
POWER SUPPLY (LOGIC)	Vdd	-0.3	7.0	V
POWER SUPPLY (LCD)	V0	Vdd -19.0	Vdd +0.3	V
INPUT VOLTAGE	Vin	-0.3	Vdd +0.3	V

ELECTRONICAL CHARACTERISTICS

ITEM	SYMBOL	CONDITION	STANDARD			UNIT
			MIN	TYP	MAX	
Input voltage	Vdd	+5V	4.7	5.0	5.5	V
Supply current	Idd	Vdd=5V	---	8	---	mA
Recommended LCD driving voltage for normal temp version module	Vdd-V0	0 °C	---	9.8	---	V
		25 °C	---	9.5	---	
		50 °C	---	9.3	---	
LED forward voltage	V_F	25 °C	---	4.2	4.6	V
LED forward current	I_F	25 °C	---	240	---	mA

FORDATA ELECTRONIC CO.,LTD

PROFESSIONAL LCD SUPPLIER FROM CHINA

FDCG12864H

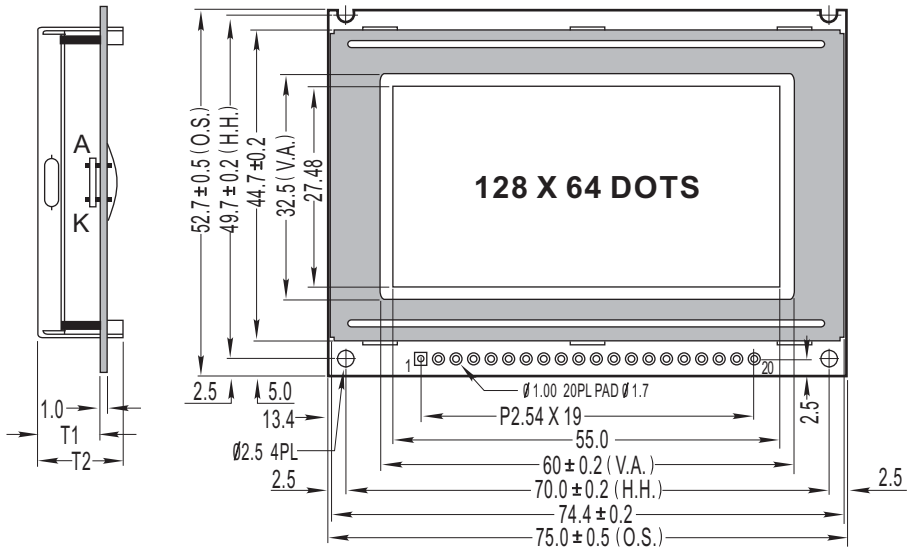

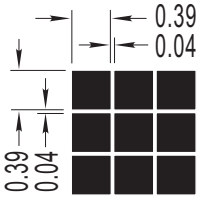

ITEM	T1	T2	UNIT
LED backlight	8.8	13.0	mm
EL or without backlight	5.4	9.0	mm

* O.S.=Overall Size V.A.=Viewing Area H.H.=Hole -Hole

BLOCK DIAGRAM

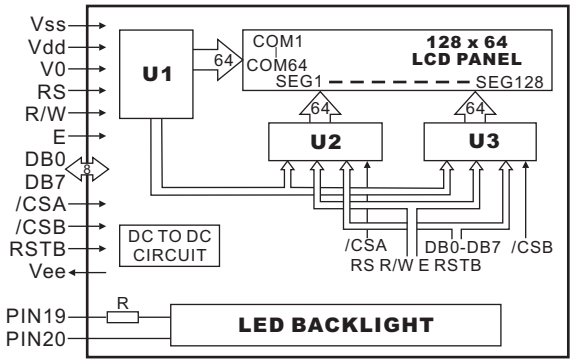

FEATURE

1. 128X64 dots graphic LCD module
2. Built- in controller (KS0108B)
3. +5V power supply
4. STN LCD panel, 1/64 duty cycle

MECHANICAL SPECIFICATIONS

DOT NUMBER	128W X 64H	——
OVERALL SIZE	75.00W X 52.70H	mm
VIEWING AREA	60.00W X 32.50H	mm
HOLE - HOLE	70.00W X 49.70H	mm
DOT SIZE	0.39W X 0.39H	mm
DOT PITCH	0.04W X 0.04H	mm

PIN ASSIGNMENT

PIN	SYMBOL	FUNCTION
1	Vdd	Power Supply
2	Vss	GND
3	V0	Contrast Adjust
4 to 11	DB0 to DB7	H/L Data bus line
12	CS1	Chip select for IC1
13	CS2	Chip select for IC2
14	RST	Reset signal
15	R/W	H/L Read/write
16	D/I	H/L H: Data,L: Instruction code
17	E	H/L Enable signal
18	Vee	Negative voltage output
19(A)	LED+	Power supply for BKL(4.2V)
20(K)	LED-	Power supply for BKL(GND)

ABSOLUTE MAXIMUM RATINGS

ITEM	SYMBOL	MIN	MAX	UNIT
POWER SUPPLY (LOGIC)	Vdd	-0.3	7.0	V
POWER SUPPLY (LCD)	V0	Vdd -19.0	Vdd +0.3	V
INPUT VOLTAGE	Vin	-0.3	Vdd +0.3	V

ELECTRONICAL CHARACTERISTICS

ITEM	SYMBOL	CONDITION	STANDARD			UNIT
			MIN	TYP	MAX	
Input voltage	Vdd	+5V	4.7	5.0	5.5	V
Supply current	Idd	Vdd=5V	---	8	---	mA
Recommended LCD driving voltage for normal temp version module	Vdd-V0	0 °C	---	9.8	---	V
		25 °C	---	9.5	---	
		50 °C	---	9.3	---	
LED forward voltage	V_F	25 °C	---	4.2	4.5	V
LED forward current	I_F	25 °C	---	240	---	mA

FORDATA ELECTRONIC CO.,LTD

PROFESSIONAL LCD SUPPLIER FROM CHINA

FDCG12864K

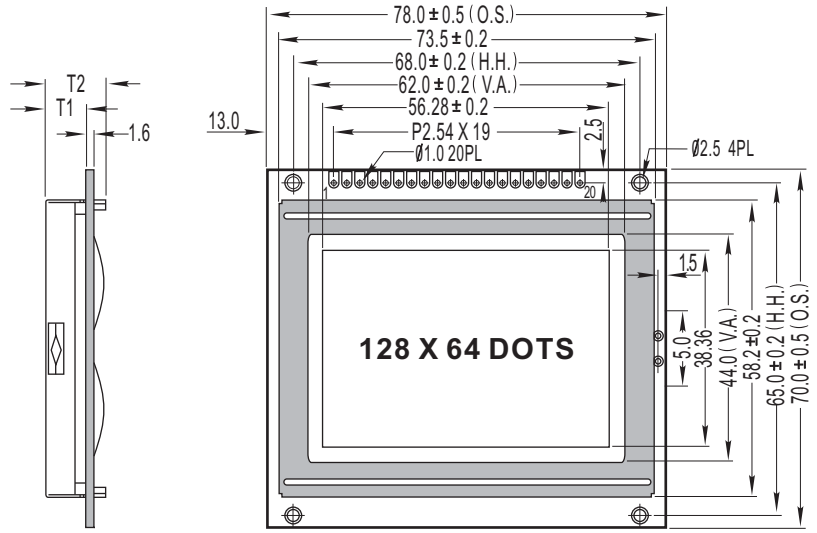

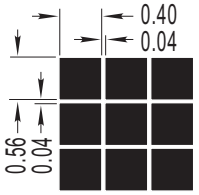

ITEM	T1	T2	UNIT
LED backlight	10.2	15.0	mm
EL or without backlight	5.0	10.0	mm

* O.S.=Overall Size V.A.=Viewing Area H.H.=Hole -Hole

BLOCK DIAGRAM

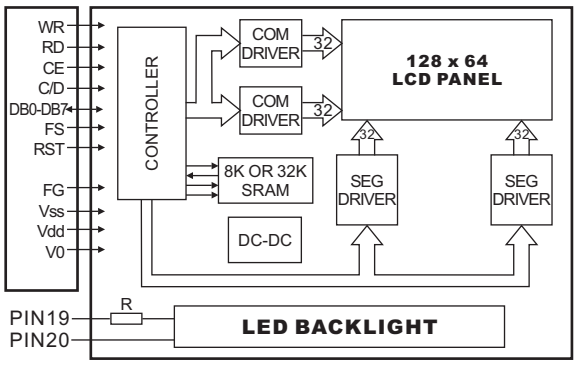

FEATURE

1. 128X64 dots graphic LCD module
2. Built- in controller (T6963C)
3. +5V power supply
4. STN LCD panel, 1/64 duty cycle

MECHANICAL SPECIFICATIONS

DOT NUMBER	128W X 64H	——
OVERALL SIZE	78.00W X 70.00H	mm
VIEWING AREA	62.00W X 44.00H	mm
HOLE - HOLE	68.00W X 65.00H	mm
DOT SIZE	0.40W X 0.56H	mm
DOT PITCH	0.04W X 0.04H	mm

PIN ASSIGNMENT

PIN	SYMBOL	FUNCTION
1	FG	Frame ground
2	Vss	GND
3	Vdd	Power Supply
4	V0	Operating voltage for LCD
5	/WR	Write enable signal
6	/RD	Read enable signal
7	/CE	Chip enable signal
8	C/D	H: Instruction , L: Data
9	/RST	Reset signal
10 to 17	DB0 to DB7	H/L Data bus line
18	FS	Font selection
19(A)	LED+	Power supply for BKL(4.2V)
20(K)	LED-	Power supply for BKL(GND)

ABSOLUTE MAXIMUM RATINGS

ITEM	SYMBOL	MIN	MAX	UNIT
POWER SUPPLY (LOGIC)	Vdd	-0.3	7.0	V
POWER SUPPLY (LCD)	V0	Vdd -19.0	Vdd +0.3	V
INPUT VOLTAGE	Vin	-0.3	Vdd +0.3	V

ELECTRONICAL CHARACTERISTICS

ITEM	SYMBOL	CONDITION	STANDARD			UNIT
			MIN	TYP	MAX	
Input voltage	Vdd	+5V	4.7	5.0	5.5	V
Supply current	Idd	Vdd=5V	---	4.5	6.5	mA
Recommended LCD driving voltage for normal temp version module	Vdd-V0	0 °C	---	9.8	---	V
		25 °C	---	9.5	---	
		50 °C	---	9.3	---	
LED forward voltage	V_F	25 °C	---	4.2	4.6	V
LED forward current	I_F	25 °C	---	240	---	mA

FORDATA ELECTRONIC CO.,LTD

PROFESSIONAL LCD SUPPLIER FROM CHINA

FDCG12864N

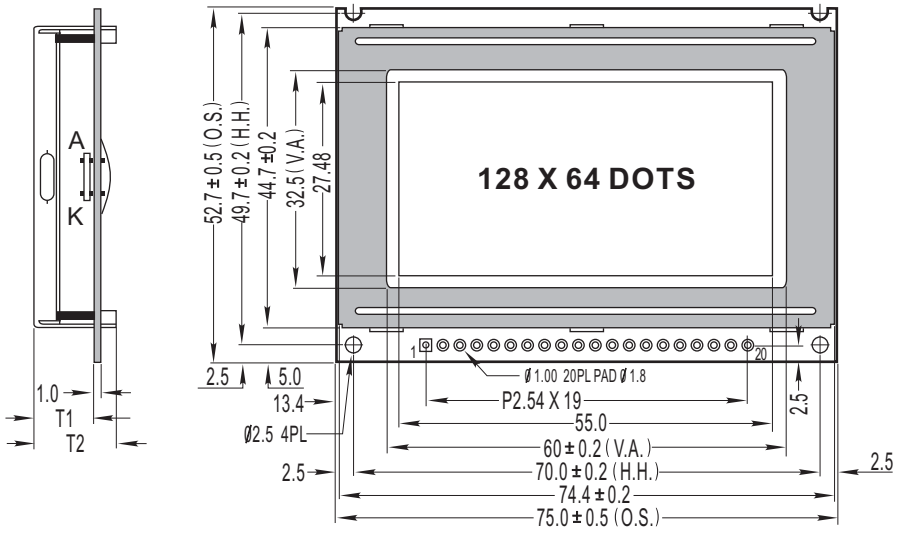

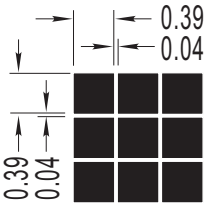

ITEM	T1	T2	UNIT
LED backlight	8.8	13.0	mm
EL or without backlight	5.4	9.0	mm

* O.S.=Overall Size V.A.=Viewing Area H.H.=Hole -Hole

BLOCK DIAGRAM

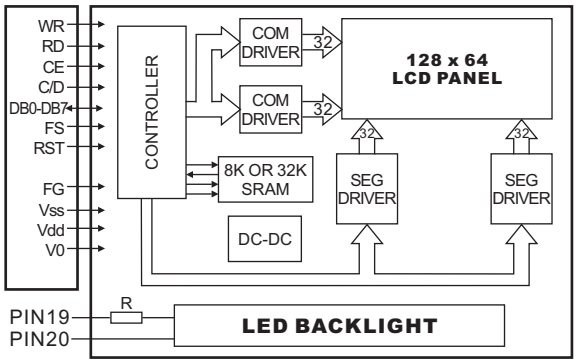

FEATURE

1. 128X64 dots graphic LCD module
2. Built- in controller (T6963C)
3. +5V power supply
4. STN LCD panel, 1/64 duty cycle

MECHANICAL SPECIFICATIONS

DOT NUMBER	128W X 64H	——
OVERALL SIZE	75.00W X 52.70H	mm
VIEWING AREA	60.00W X 32.50H	mm
HOLE - HOLE	70.00W X 49.70H	mm
DOT SIZE	0.39W X 0.39H	mm
DOT PITCH	0.04W X 0.04H	mm

PIN ASSIGNMENT

PIN	SYMBOL	FUNCTION
1	FG	Frame ground
2	Vss	GND
3	Vdd	Power Supply
4	V0	Operating voltage for LCD
5	/WR	Write enable signal
6	/RD	Read enable signal
7	/CE	Chip enable signal
8	C/D	H: Instruction , L: Data
9	/RST	Reset signal
10 to 17	DB0 to DB7	H/L Data bus line
18	FS	Font selection
19(A)	LED+	Power supply for BKL(4.2V)
20(K)	LED-	Power supply for BKL(GND)

ABSOLUTE MAXIMUM RATINGS

ITEM	SYMBOL	MIN	MAX	UNIT
POWER SUPPLY (LOGIC)	Vdd	-0.3	7.0	V
POWER SUPPLY (LCD)	V0	Vdd -19.0	Vdd +0.3	V
INPUT VOLTAGE	Vin	-0.3	Vdd +0.3	V

ELECTRONICAL CHARACTERISTICS

ITEM	SYMBOL	CONDITION	STANDARD			UNIT
			MIN	TYP	MAX	
Input voltage	Vdd	+5V	4.7	5.0	5.5	V
Supply current	Idd	Vdd=5V	---	4.5	6.5	mA
Recommended LCD driving voltage for normal temp version module	Vdd-V0	0 °C	---	9.8	---	V
		25 °C	---	9.5	---	
		50 °C	---	9.3	---	
LED forward voltage	V_F	25 °C	---	4.2	4.6	V
LED forward current	I_F	25 °C	---	250	---	mA

FORDATA ELECTRONIC CO.,LTD

PROFESSIONAL LCD SUPPLIER FROM CHINA

FECG24064B

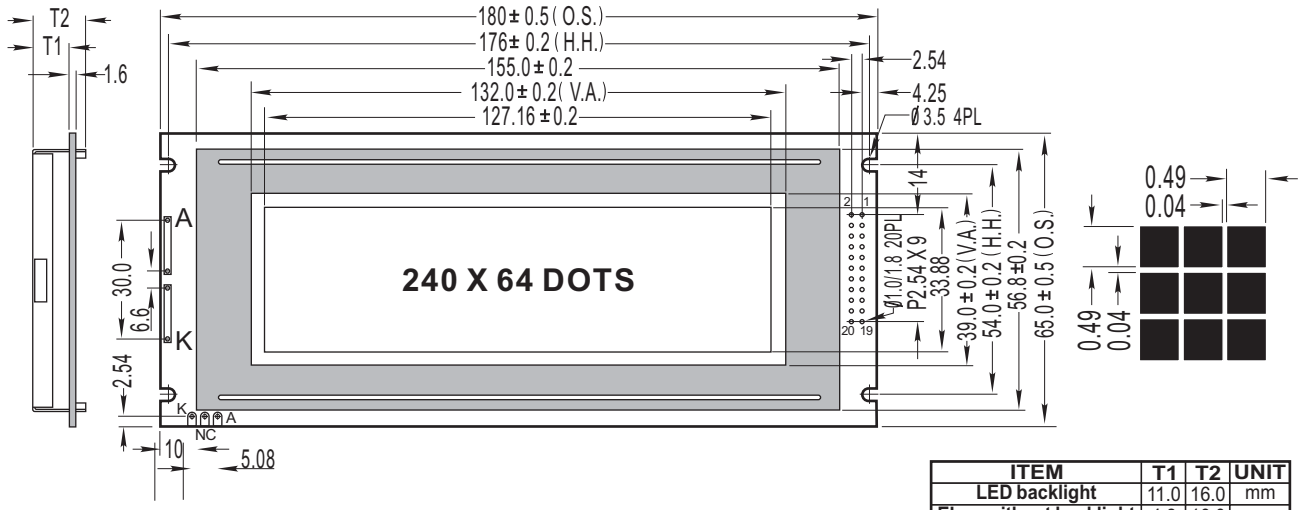

ITEM	T1	T2	UNIT
LED backlight	11.0	16.0	mm
EL or without backlight	4.8	10.0	mm

* O.S.=Overall Size V.A.=Viewing Area H.H.=Hole -Hole

BLOCK DIAGRAM

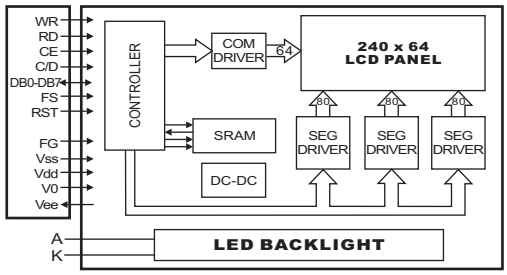

FEATURE

1. 240X64 dots graphic LCD module
2. Built- in controller (T6963C)
3. +5V power supply
4. STN LCD panel, 1/64 duty cycle

MECHANICAL SPECIFICATIONS

DOT NUMBER	240W X 64H	—
OVERALL SIZE	180.00W X 65.00H	mm
VIEWING AREA	134.00W X 40.40H	mm
HOLE - HOLE	176.00W X 54.00H	mm
DOT SIZE	0.49W X 0.49H	mm
DOT PITCH	0.04W X 0.04H	mm

PIN ASSIGNMENT

PIN	SYMBOL	FUNCTION
1	FG	Frame ground
2	Vss	GND
3	Vdd	Power Supply
4	V0	Contrast adjustment
5	/WR	Write enable signal
6	/RD	Read enable signal
7	/CE	Chip enable signal
8	C/D	H: Instruction , L: Data
9	Vee	Operating voltage for LCD
10	RST	Reset signal
11 to 18	DB0 to DB7	H/L Data bus line
19	FS	Font selection
20	N/A	No Connection
A	LED+	Power supply for BKL
K	LED-	Power supply for BKL

ABSOLUTE MAXIMUM RATINGS

ITEM	SYMBOL	MIN	MAX	UNIT
POWER SUPPLY (LOGIC)	Vdd	-0.3	7.0	V
POWER SUPPLY (LCD)	V0	Vdd -30	Vdd +0.3	V
INPUT VOLTAGE	Vin	-0.3	Vdd +0.3	V

ELECTRONICAL CHARACTERISTICS

ITEM	SYMBOL	CONDITION	STANDARD			UNIT
			MIN	TYP	MAX	
Input voltage	Vdd	+5V	4.7	5.0	5.5	V
Supply current	Idd	Vdd=5V	---	10	---	mA
Recommended LCD driving voltage for normal temp version module	Vdd-V0	0 °C	---	13.0	---	V
		25 °C	---	12.5	---	
		50 °C	---	12.0	---	
LED forward voltage	V_F	25 °C	---	---	---	V
LED forward current	I_F	25 °C	---	---	---	mA

FORDATA ELECTRONIC CO.,LTD

PROFESSIONAL LCD SUPPLIER FROM CHINA

FDCG128128A

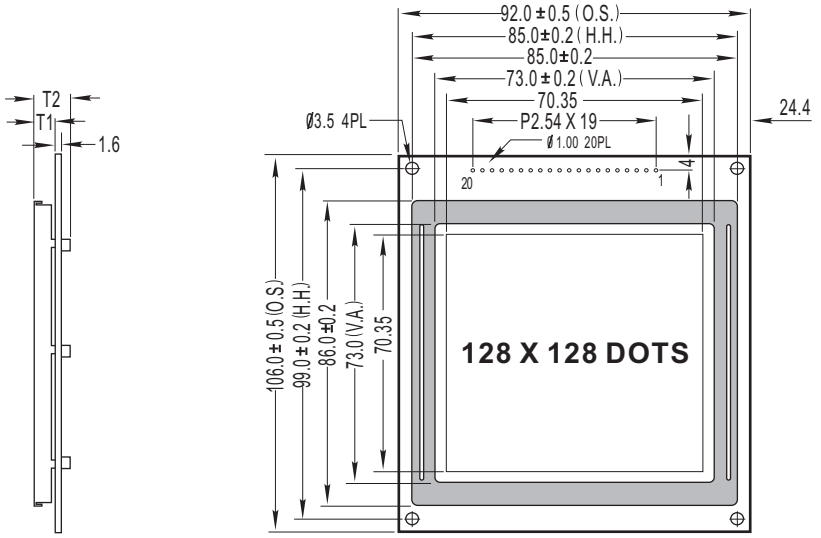

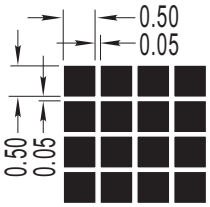

ITEM	T1	T2	UNIT
LED backlight	10.0	16.5	mm
EL or without backlight	5.5	12.0	mm

* O.S.=Overall Size V.A.=Viewing Area H.H.=Hole -Hole

BLOCK DIAGRAM

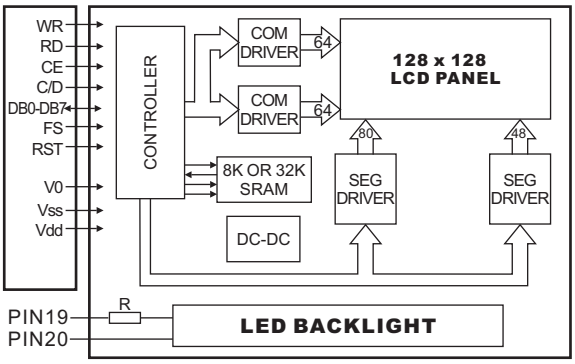

FEATURE

1. 128X128 dots graphic LCD module
2. Built- in controller (T6963C)
3. +5V power supply
4. STN LCD panel, 1/128 duty cycle

MECHANICAL SPECIFICATIONS

DOT NUMBER	128W X 128H	—
OVERALL SIZE	92.00W X 106.00H	mm
VIEWING AREA	73.00W X 73.00H	mm
HOLE - HOLE	85.00W X 99.00H	mm
DOT SIZE	0.50W X 0.50H	mm
DOT PITCH	0.05W X 0.05H	mm

PIN ASSIGNMENT

PIN	SYMBOL	FUNCTION
1	FG	Frame ground
2	Vss	GND
3	Vdd	Power Supply
4	V0	Operating voltage for LCD
5	/WR	Write enable signal
6	/RD	Read enable signal
7	/CE	Chip enable signal
8	C/D	H: Instruction , L: Data
9	/RST	Reset signal
10 to 17	DB0 to DB7	H/L Data bus line
18	FS	Font selection
19(A)	LED+	Power supply for BKL(4.2V)
20(K)	LED-	Power supply for BKL(GND)

ABSOLUTE MAXIMUM RATINGS

ITEM	SYMBOL	MIN	MAX	UNIT
POWER SUPPLY (LOGIC)	Vdd	-0.3	7.0	V
POWER SUPPLY (LCD)	V0	Vdd -30.0	Vdd +0.3	V
INPUT VOLTAGE	Vin	-0.3	Vdd +0.3	V

ELECTRONICAL CHARACTERISTICS

ITEM	SYMBOL	CONDITION	STANDARD			UNIT
			MIN	TYP	MAX	
Input voltage	Vdd	+5V	4.7	5.0	5.5	V
Supply current	Idd	Vdd=5V	---	10	---	mA
Recommended LCD driving voltage for normal temp version module	Vdd-V0	0 °C	---	19.5	---	V
		25 °C	---	19.0	---	
		50 °C	---	18.0	---	
LED forward voltage	V_F	25 °C	---	4.2	4.5	V
LED forward current	I_F	25 °C	---	530	---	mA

FORDATA ELECTRONIC CO.,LTD

PROFESSIONAL LCD SUPPLIER FROM CHINA

FECG240128A

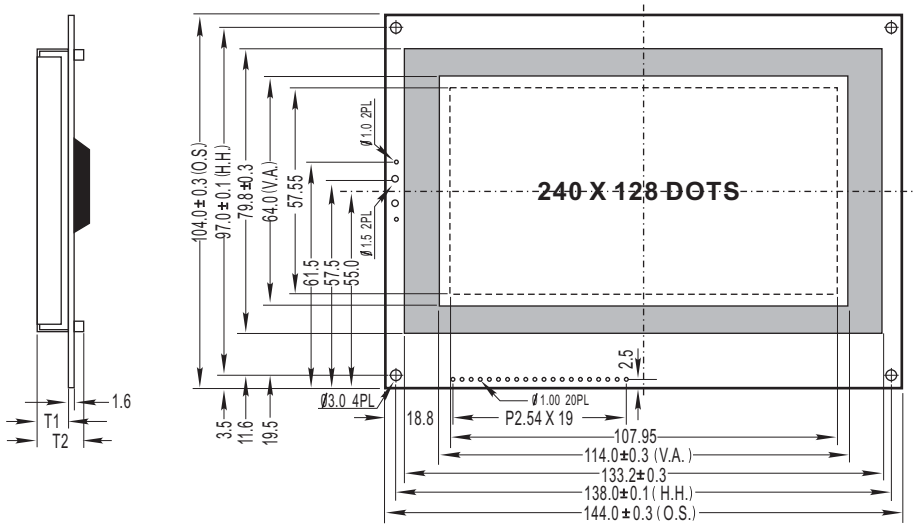

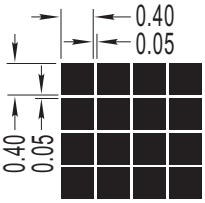

ITEM	T1	T2	UNIT
LED backlight	8.0	12.1	mm
EL or without backlight	---	---	mm

* O.S.=Overall Size V.A.=Viewing Area H.H.=Hole -Hole

BLOCK DIAGRAM

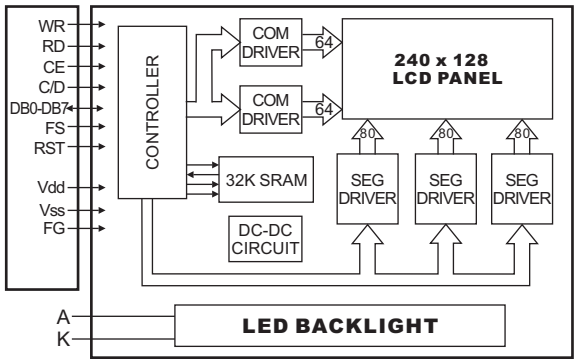

FEATURE

1. 240 X128 dots graphic LCD module
2. Built- in controller (T6963C)
3. +5V power supply
4. STN / FSTN LCD panel, 1/128 duty cycle

MECHANICAL SPECIFICATIONS

DOT NUMBER	240 W X 128H	—
OVERALL SIZE	144.00W X 104.00H	mm
VIEWING AREA	114.00W X 64.00H	mm
HOLE - HOLE	138.00W X 97.00H	mm
DOT SIZE	0.40W X 0.40H	mm
DOT PITCH	0.05W X 0.05H	mm

PIN ASSIGNMENT

PIN	SYMBOL	FUNCTION
1	Vee	Negative Voltage Output
2	Vss	GND
3	Vdd	Power Supply
4	V0	Operating voltage for LCD
5	/WR	Write enable signal
6	/RD	Read enable signal
7	/CE	Chip enable signal
8	C/D	H: Instruction , L: Data
9	/RST	Reset signal
10 to 17	DB0 to DB7	H/L Data bus line
18	FS	Font selection
19(A)	LED+	Power supply for BKL(4.2V)
20(K)	LED-	Power supply for BKL(GND)

ABSOLUTE MAXIMUM RATINGS

ITEM	SYMBOL	MIN	MAX	UNIT
POWER SUPPLY (LOGIC)	Vdd	-0.3	7.0	V
POWER SUPPLY (LCD)	V0	---	---	V
INPUT VOLTAGE	Vin	-0.3	Vdd +0.3	V

ELECTRONICAL CHARACTERISTICS

ITEM	SYMBOL	CONDITION	STANDARD			UNIT
			MIN	TYP	MAX	
Input voltage	Vdd	+5V	4.7	5.0	5.5	V
Supply current	Idd	Vdd=5V	---	26		mA
Recommended LCD driving voltage for normal temp version module	Vdd-V0	0 °C	---	18.0	---	V
		25 °C	---	18.5	---	
		50 °C	---	19.0	---	
LED forward voltage	V_F	25 °C	---	---	---	V
LED forward current	I_F	25 °C	---	---	---	mA