Front Board — Component Side (Front) View

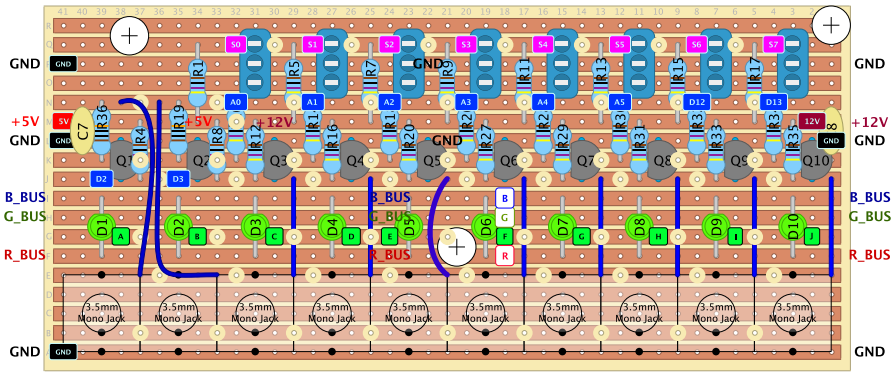
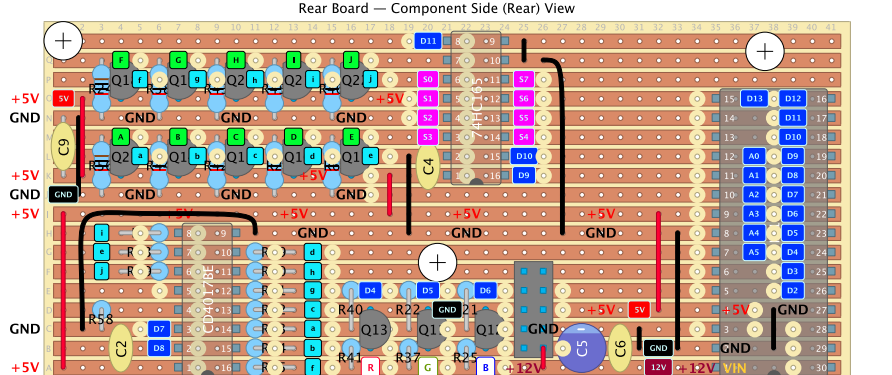
Rear Board — Component Side (Rear) View