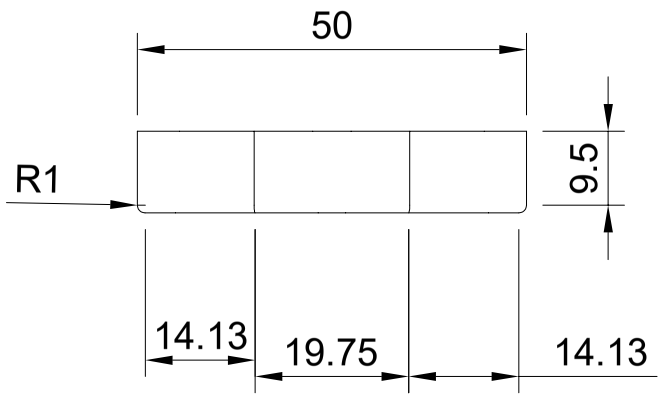

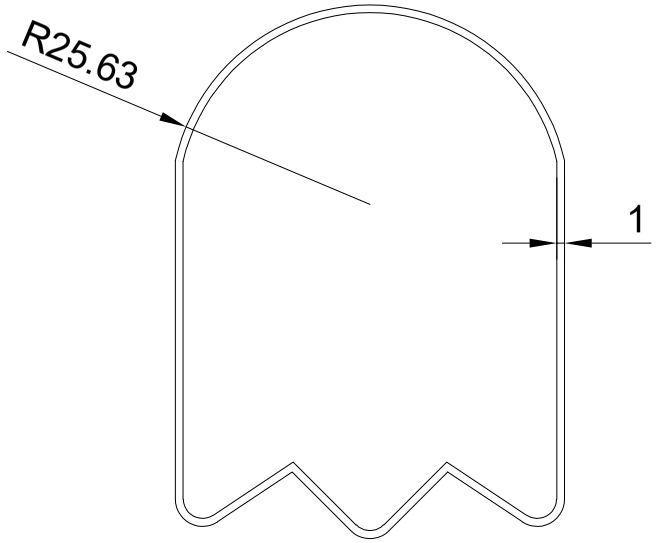

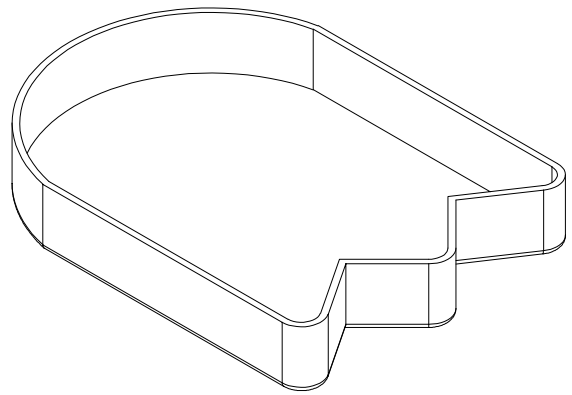

Dept.	Technical reference	Created by Mithunan Jayaseelan 2022-12-13	Approved by
		Document type	Document status
		Title Bottom Case	DWG No.
			Rev. / Date of issue / Sheet 3/3