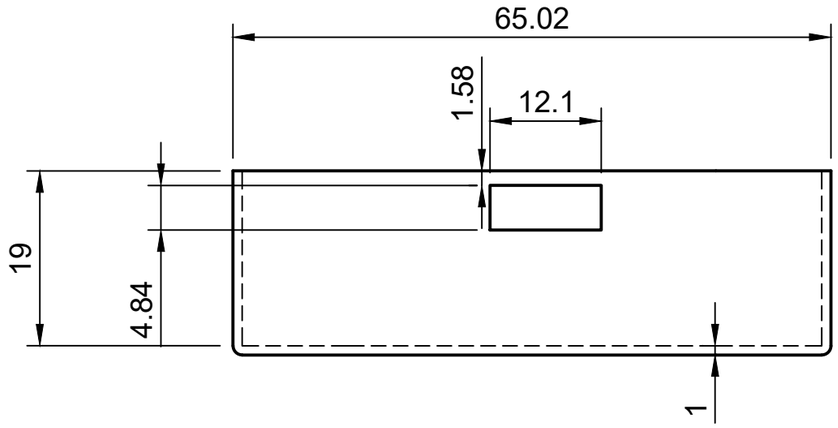

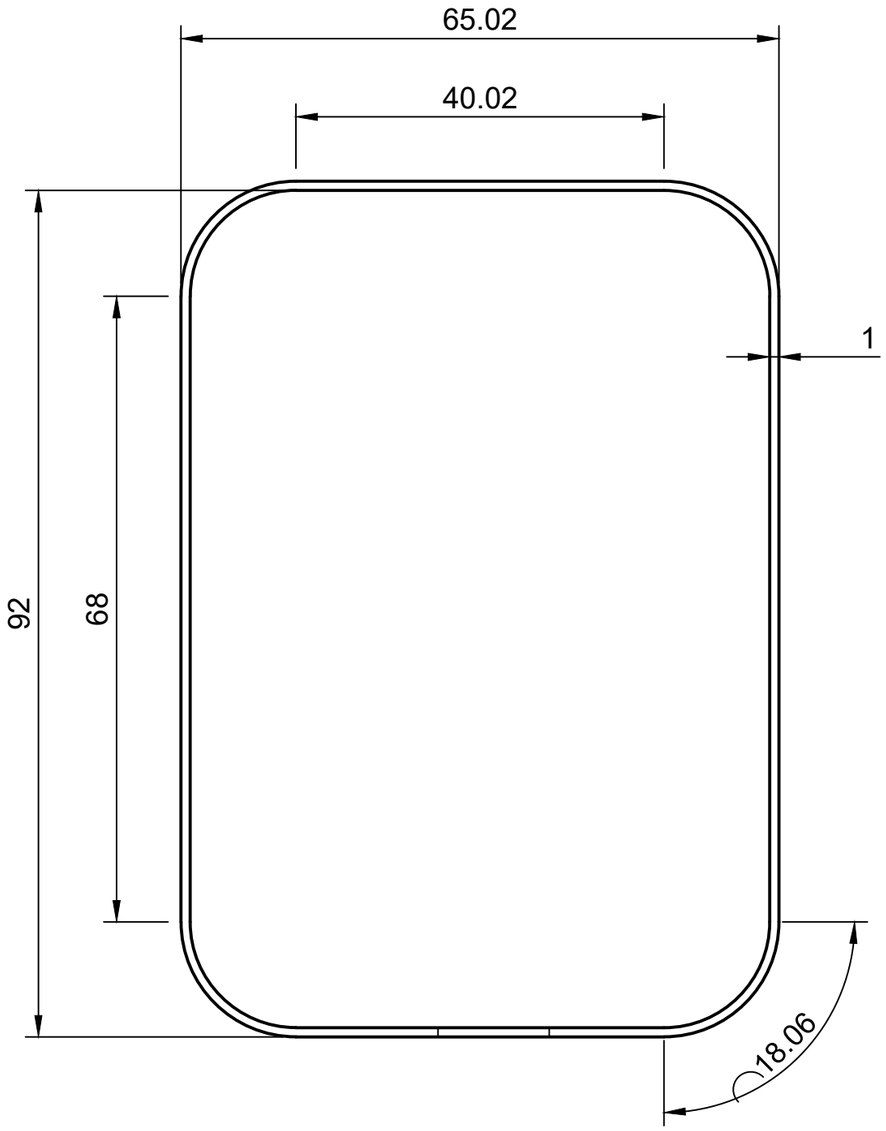

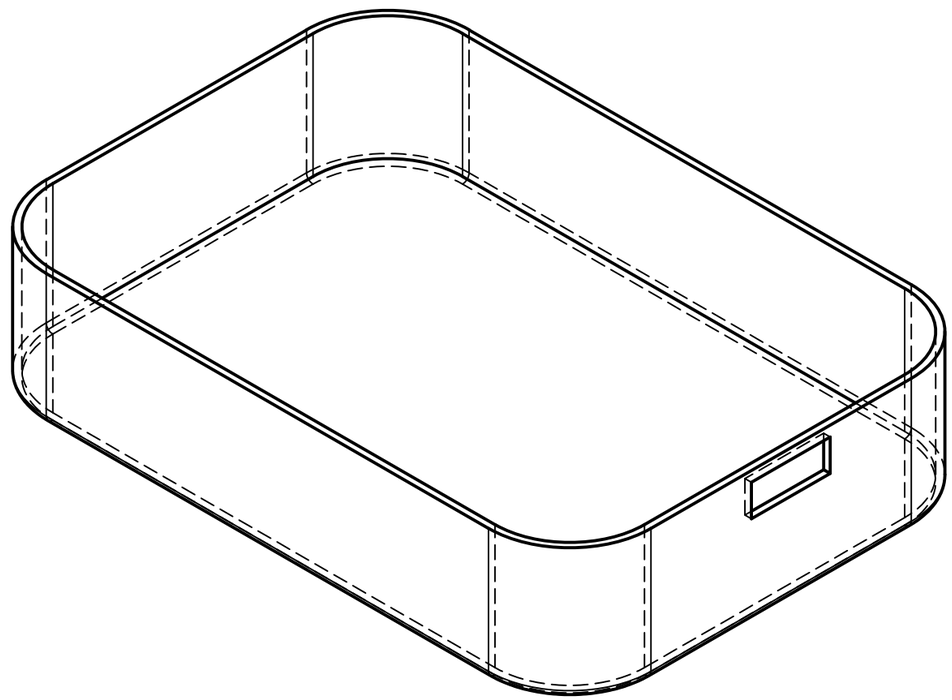

Dept.	Technical reference	Created by Sea Drive Lackeys 2022-11-28	Approved by	
		Document type	Document status	
		Title Visual Novel Controller Base	DWG No. 2	
			Rev. / Date of issue	Sheet 2/4