ELSE-i

greateyes

DISCOVER WHAT
THE EYE CAN'T SEE

Typical Applications

In-vivo Fluorescence Bioimaging
Astronomy
LIBS Spectroscopy
Neutron Tomography
EL / PL Imaging
Ultracold Quantum Studies

Key Specifications

High Quantum Efficiency
Ultra Deep Cooling to -100 °C
18-bit Dynamic Range
Multi-MHz Readout
Compact Design

Full-Frame Deep Cooling Scientific CCD Camera for Imaging Applications

ELSE-i

THE GOLDEN CHILD OF LOW NOISE CCD CAMERAS

Straight out of Berlin comes ELSE, greateyes' new platform for your spectroscopy and imaging applications in the UV-VIS-NIR range. ELSE integrates cutting-edge low-noise electronics and ultra-deep cooling technology while keeping a compact camera design. Multiple readout speeds can be selected supporting pixel rates from 50 kHz up to 5 MHz. True 18-bit AD conversion allows to exploit the full dynamic range of the CCD sensor for highest performance and SNR. Choose from a wide range of sensors to find the best match with your requirements. ELSE is ideally suited for detection of very weak signal intensities where a low-noise floor is paramount. ELSE offers unprecedented possibilities for your measurements of tomorrow.

Features & Benefits

- **Ultra deep TE cooling to -100 °C**
  lowest dark current for better detection limit
- **Hermetic vacuum seal**
  low camera maintenance and sensor protection
- **GigE & USB 3.0 data interface**
  local or remote network operation – your choice!
- **Multiple sensor options**
  UV, VIS or NIR coatings for different sensor formats
- **High QE up to 98%**
  very sensitive sensors for low light applications
- **User selectable gain**
  balance your detector for best SNR and dynamic range
- **Fast readout speeds up to 5 MHz**
  fast frame rates paired with low-noise electronics
- **Flexible software options**
  camera software and SDKs available

Common specifications

Pixel readout frequency	50 kHz, 250 kHz, 1 MHz, 3 MHz (5 MHz for visualization mode; up to 20 MHz with multi-output)
Readout modes	2 output nodes for 1k1k & 2k2k cameras, 4 output nodes for 2k2k plus & 4k4k cameras
AD converter resolution	18-bit
Linearity	Better than 99%
Window material	MgF_2 or UVFS for UV sensitive models, otherwise BK7
Flange - focal plane	10.0 mm (1k1k, 2k2k plus & 4k4k cameras); 9mm (2k2k camera)
Temperature monitoring	Two thermistors at CCD sensor and thermoelectric cooler (hot side)
Data link	Gigabit Ethernet, USB 3.0
Software	greateyes Vision software for Windows 7 / 10
SDK and drivers	DLL for Windows; LabVIEW, EPICS, Linux, Python and Tango driver (optional)
TTL interface signals	Exposure out, shutter out, 2 external trigger in
Operating conditions	Temperature: 0°C to 35°C ambient, relative humidity <80% (non-condensing)
Power supply	1k1k & 2k2k: 80-264 VAC (typ. 115/230), 47-63 Hz (typ. 50/60), max. 1.1 A (230 V) / 1.9 A (115 V) 2k2k plus & 4k4k: 85-264 VAC (typ. 115/230), 47-63 Hz (typ. 50/60), max. 1.9 A (230 V) / 3.8 A (115 V)
Certification	CE
Dimensions	8.3 cm (3.27") × 10.0 cm (3.94") × 13.1 cm (5.16") (W × H × L, 1k1k & 2k2k camera body) 13.7 cm (5.39") × 13.7 cm (5.39") × 17.1 cm (6.71") (W × H × L, 2k2k plus & 4k4k camera body)
Weight	2.2 kg (1k1k & 2k2k), 5.4 kg (2k2k plus & 4k4k)

© 2006-2021 greateyes GmbH. Rev03

ELSE-i

The golden statue of Victoria upon the Berlin Victory Column has been given the nickname "Else" by Berliners.

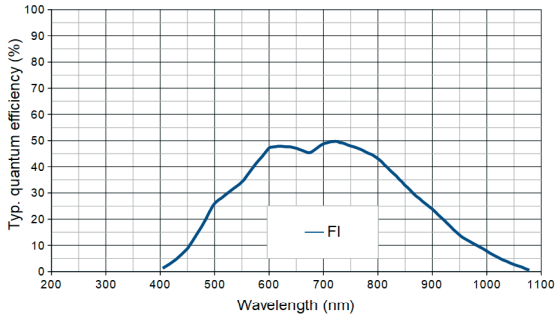

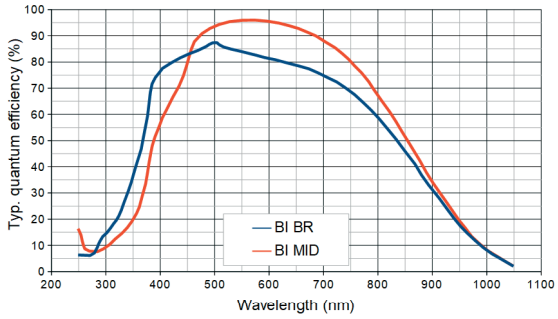

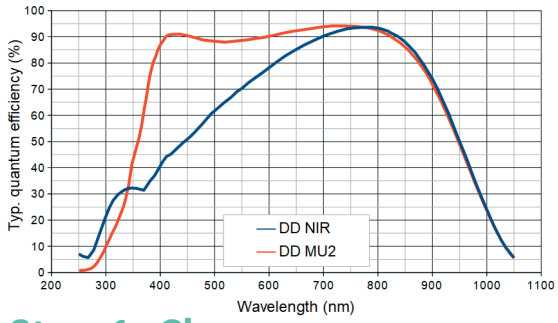

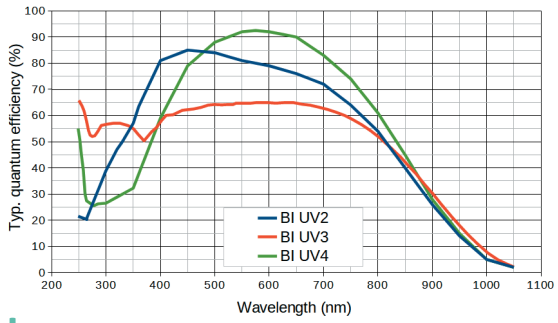

Step 1: Choose your camera model

ELSE-i Series	ELSE-i 1k1k		ELSE-i 2k2k		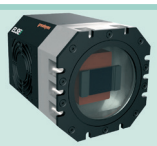 ELSE-i 2k2k plus		ELSE-i 4k4k	
Enhanced UV sensitivity	**BI UV3**		**BI UV3**					**BI UV2** **BI UV4**
Enhanced VIS sensitivity	**FI** **BI BR** **BI MID**		**FI** **BI MID**		**BI MID**		**FI** **BI BR** **BI MID**	
Enhanced NIR sensitivity		**DD NIR** **DD MU2**		**DD NIR** **DD MU2**				**DD MU2**
Usable pixels (columns × rows)	1024 × 1024 (FI) 1056 × 1027 (others)		2048 × 2052		2048 × 2064		4096 × 4112	
Active image area	13.3 mm × 13.3 mm		27.6 mm × 27.6 mm		30.7 mm × 30.7 mm		61.4 mm × 61.4 mm	
Pixel size	13 µm × 13 µm		13.5 µm × 13.5 µm		15 µm × 15 µm		15 µm × 15 µm	
CCD sensor cooling	-100 °C to 20 °C		-90°C to 20 °C		-90°C to 20 °C		-90°C to 20 °C	
Full well capacity	100 ke⁻	120 ke⁻	100 ke⁻	150 ke⁻	150 ke⁻		150 ke⁻	350 ke⁻
Register well / Output node	400 ke⁻ / -		400 ke⁻/ -	600 ke⁻/ -	850 ke⁻ / 900 ke⁻		- / 900 ke⁻	- / 600 ke⁻
Typ. read noise (e⁻) @ 50 kHz @ 1 MHz @ 3 MHz	 2.8 6.4 10.9		 3.4 7.0 13.6		 4.6 8.5 17.0		 4.6 8.5 17.0	 2.8 5.8 10.4
Dark current (e⁻/pixel/s)	@ -100 °C 0.00015	0.0005	@ -90 °C 0.0001	0.001	@ -90 °C 0.00008		@ -90 °C 0.00008	0.0006
Gain (counts/e⁻): Standard mode High capacity mode	 1		 1 0.34		 0.6 0.2		 0.6 0.2	 1 0.34
CCD sensor type	Front-illuminated (FI), back-illuminated (BI), deep depletion fringe suppression (DD)							
Antireflective coating	UV (UV3), broadband (BR), midband (MID), near-infrared (NIR), multiband (MU2), astro broadband (UV2), astro midband (UV4)							
Blemish specifications	Grade 0 or grade 1 (standard) as specified by sensor manufacturer. For more information, please see: https://www.greateyes.de/en/glossar.html							

© 2006-2021 greateyes GmbH. Rev03

ELSE-i

Step 2: Choose your accessories and software

Order code	Description
A) Accessories for imaging purposes	
GE-CM02	C-mount lens adapter for 1k1k camera
GE-M4202	M42 lens adapter for 1k1k, 2k2k, and 2k2k plus cameras (integrated filter holder optional)
GE-FM02	F-mount lens adapter for 1k1k, 2k2k, and 2k2k plus cameras (integrated filter holder optional)
GE-SR25	25mm shutter for 1k1k camera, including shutter driver module
GE-SR45	45mm shutter for 2k2k and 2k2k plus camera, including shutter driver module
B) Accessories for enhanced cooling performance	
GE-CR01	Compact liquid cooling, circulating the coolant at room temperature for deep camera cooling
GE-CR02	Recirculating water chiller, PID control with temp. from -5°C to 30°C for ultra-deep camera cooling
C) Software development kit (SDK) and drivers	
GE-LX01	SDK for Linux (C/C++ based)
GE-PYT01	Python driver
GE-LAB01	LabVIEW driver
GE-EP	EPICS driver
GE-TAN	Tango driver

Step 3: Flexible customisation service

With direct and fast response, we provide various customisations and OEM services. For example, the alteration of sensor position/tilt, the modification of camera housing or cooling system, etc. Let us know what ELSE you require.

TECHNICAL DRAWINGS*

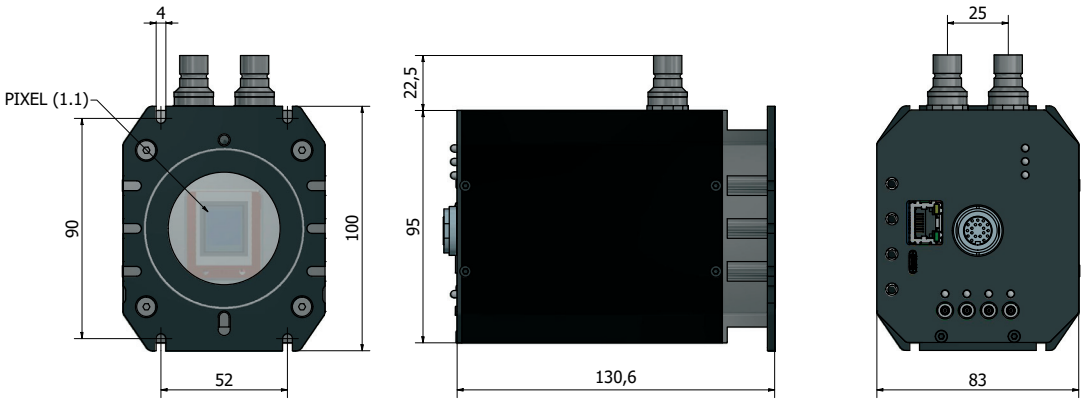

***Only valid for ELSE-i 1k1k and ELSE-i 2k2k. For other drawings, please send us an equiry.**

Items included with your camera

GE-VI01	greateyes Vision software suite for Windows
GE-SDK01	SDK for Windows (C/C++ based)
GE-USB3m3	3m USB 3.0 cable type A to type C
GE-GigE10m	10m Ethernet cable
GE-StoB2m	2m SMB to BNC connection cable × 2
GE-POW01	Camera power supply with cabling
GE-ManCam	Camera instruction manual

Subscribe to newsletter

Follow us on LinkedIn

greateyes GmbH
Justus-von-Liebig-Str. 2
12489 Berlin
Germany

Phone: +49 30 912075 250
Fax: +49 30 912075 251

Web: www.greateyes.de
E-mail: info@greateyes.de
For a list of representatives and distributors, please visit our website.

USB 3.0 Gigabit Ethernet spec EPICS Linux python powered

© 2006-2021 greateyes GmbH. Rev03