بِسْمِ اللّٰهِ الرَّحْمٰنِ الرَّحِيْمِ

Power

- Current and voltage are the two basic variables in an electric circuit, they are not sufficient by themselves. For practical purposes, we need to know how much ***power*** an electric device can handle. We all know from experience that a ***100-watt bulb*** gives more light than ***a 60-watt bulb***. We also know that when we pay our bills to the electric utility companies, we are paying for the electric ***energy*** consumed over a certain period of time. Thus, power and energy calculations are important in circuit analysis.
- ***Power is defined as the rate at which work is done or energy is expended.***
- ***It is expressed in watts (W). Power is one watt if one joule of energy is expended in transferring one coulomb of charge through the device in one second.***

- **Mathematically, the relationship is :-** $p = dw / dt$

  where 'p' is power in watts (W), 'w' is energy in joules (J) & 't' is time in seconds.

- **Also $p = dw / dt = dw / dq \times dq / dt = vi$**

Power

- **The absorbed power must be proportional both to the number of coulombs transferred per second *(current)* and to the energy needed to transfer one coulomb through the element *(voltage).***
- **The conventions for current, voltage, and power are shown in Fig. 2.12.**

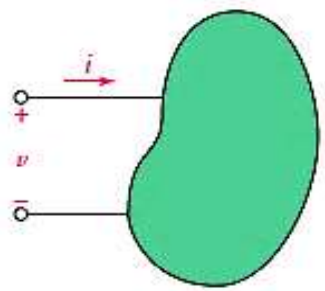

FIGURE 2.12 The power absorbed by the element is given by the product $p = vi$. Alternatively, we can say that the element generates or supplies a power $-vi$.

- Thus, the power ***absorbed or supplied*** by an element is the product of the ***voltage*** across the element and the ***current*** through it. If the power has a **+ve** sign, power is being delivered to or ***absorbed*** by the element. If, on the other hand, the power has a **-ve** sign, power is being ***supplied*** by the element.

Passive Sign Convention

- The passive sign convention is satisfied when the current arrow is directed into the element at the *plus-marked terminal*.
- It says that if the current arrow and the voltage polarity signs are placed such that the current enters that end of the element marked with the positive sign, then the power *absorbed* can be expressed by the product of the specified current and voltage variables.
  - If the numerical value of the *product is negative, then we say that the element is absorbing negative power*, or that it is actually *generating power* and delivering it to some external element.
    - In the first case the +ve terminal is at 5 volts wrt the other terminal.
    - In the second case the +ve terminal is at – 5 volts wrt the other terminal.

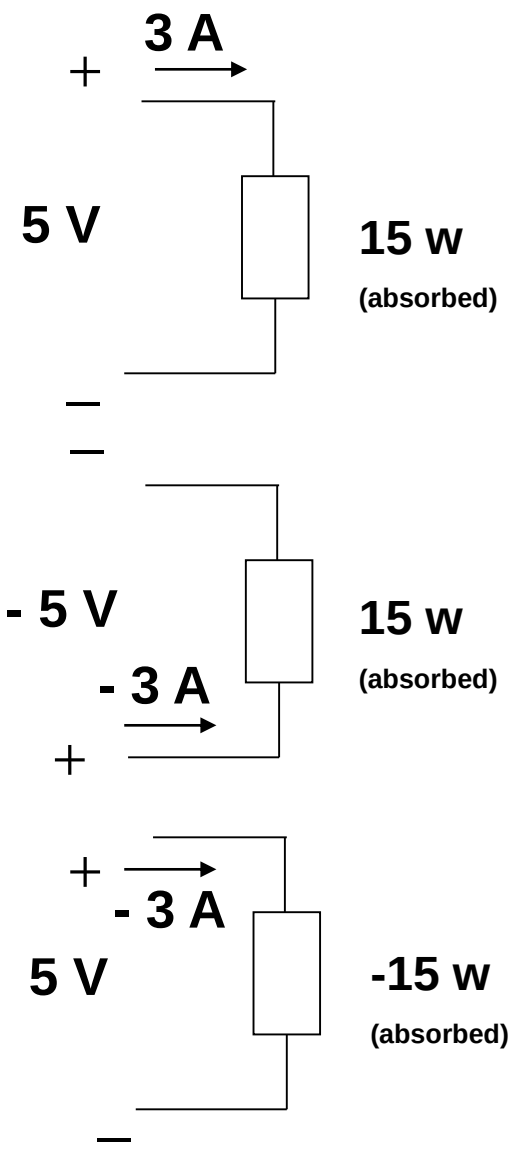

Example : Power

Compute the power absorbed by each part in Fig. 2.13.

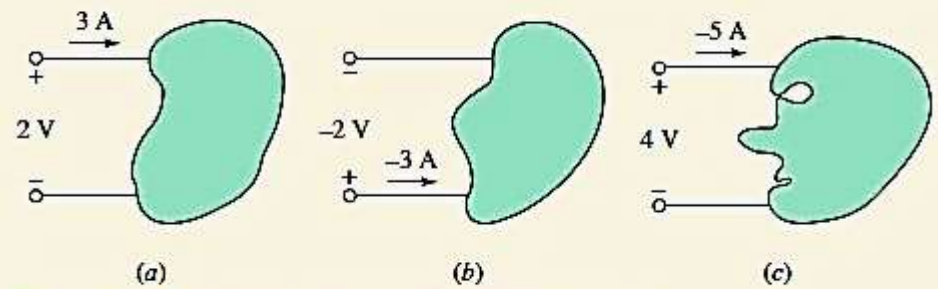

■ **FIGURE 2.13** (*a, b, c*) Three examples of two-terminal elements.

In Fig. 2.13*a*, we see that the reference current is defined consistent with the passive sign convention, which assumes that the element is absorbing power. With +3 A flowing into the positive reference terminal, we compute

$$P = (2\text{ V})(3\text{ A}) = 6\text{ W}$$

of power absorbed by the element.

Figure 2.13*b* shows a slightly different picture. Now, we have a current of −3 A flowing into the positive reference terminal. This gives us an absorbed power

$$P = (-2\text{ V})(-3\text{ A}) = 6\text{ W}$$

Thus, we see that the two cases are actually equivalent: A current of +3 A flowing into the top terminal is the same as a current of +3 A flowing out of the bottom terminal, or, equivalently, a current of −3 A flowing into the bottom terminal.

Referring to Fig. 2.13*c*, we again apply the passive sign convention rules and compute an absorbed power

$$P = (4\text{ V})(-5\text{ A}) = -20\text{ W}$$

Since we computed a negative *absorbed* power, this tells us that the element in Fig. 2.13*c* is actually *supplying* +20 W (i.e., it's a source of energy).

PRACTICE : Power

PRACTICE

2.6 Determine the power being absorbed by the circuit element in Fig. 2.14*a*.

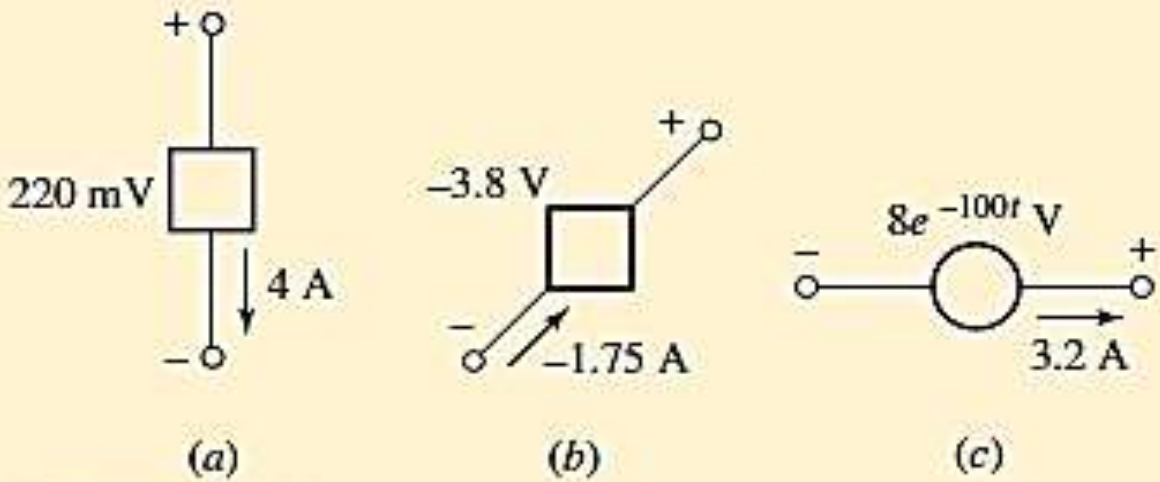

FIGURE 2.14

2.7 Determine the power being generated by the circuit element in Fig. 2.14*b*.

2.8 Determine the power being delivered to the circuit element in Fig. 2.14*c* at $t = 5$ ms.

Example : Power

- How much energy does a 100 - watt electric bulb consume in two hours?

We know p = dw / dt where w is in joules and t in seconds.

- So 100 = w (joules) / (2X60X60)
- Hence w = 720 k joules.

Also pdt = dw

- So watt X sec = joules
- Or watt X 3600 X sec = joules X 3600
- Hence 1watt-hour = 3600 joules
- And 200 watt - hr = 720 k joules *(watt-hr is the unit used by electrical companies)*

The Circuit Elements !

PRACTICE

2.9 Find the power *absorbed* by each element in the circuit in Fig.

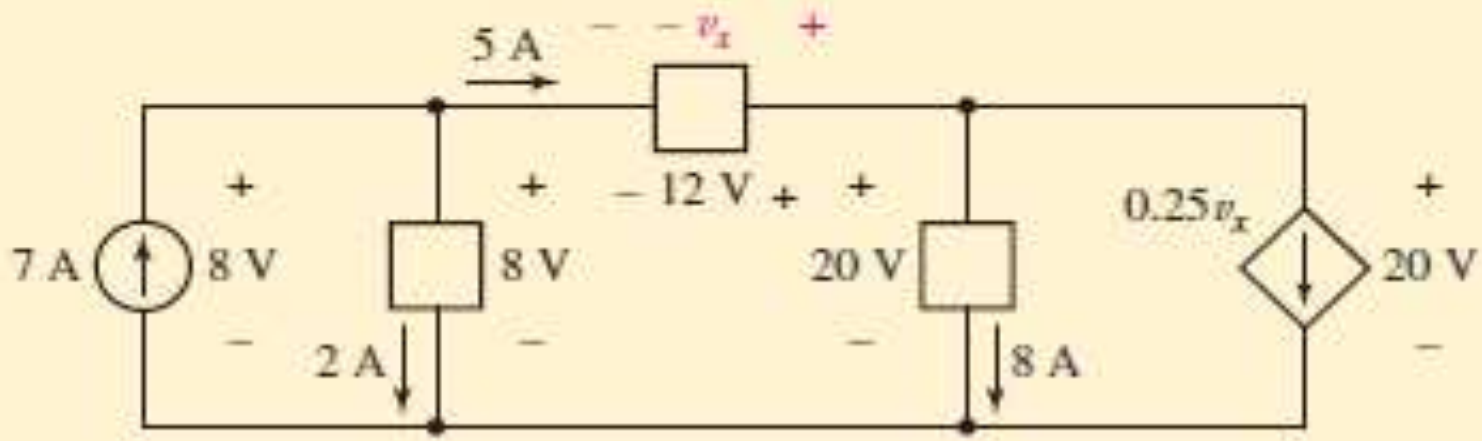

The Circuit Elements

- **Each component of the circuit is called *an element*.**
- **The circuit elements can be described as :-**

  - **Active elements and**
  - **Passive elements**

- ***Voltage sources* and *current sources* are classified as *active elements*. These are capable of *delivering power* to some external device.**

- ***Passive elements* include *resistors, capacitors and inductors*.**

- **Incidentally, the voltage – current relationship is :-**

$$V \propto i \;, \qquad V \propto \int i\,dt \;, \qquad V \propto di/dt$$

- **Voltage & Current Sources !**

Independent Voltage Sources

- An ***Ideal Independent voltage source*** is a voltage source that maintains the constant Voltage across its terminals no matter how much current is drawn from it.
- **An ideal Voltage source will have Zero internal resistance.**
- **The symbols for *independent voltage sources* are:-**
  - **Small 'v' is used for time varying or constant voltages.**
  - **Capital 'V' is used for constant voltages only.**
- **Independent current sources !**

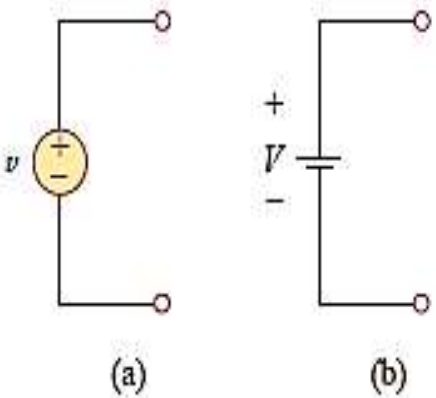

Figure 1.11
Symbols for independent voltage sources: (a) used for constant or time-varying voltage, (b) used for constant voltage (dc).

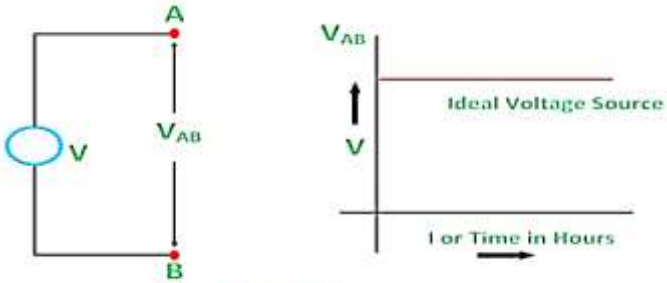

Figure A

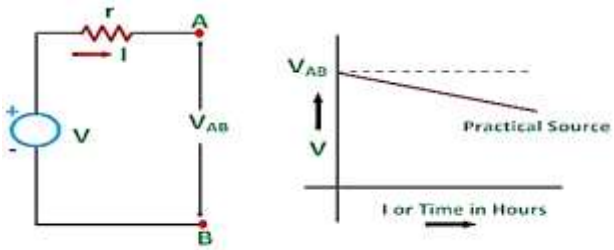

Figure B

Independent Current Sources

- An **ideal Independent current source** is a current source which can supply constant current regardless of any voltage drops in the circuit.

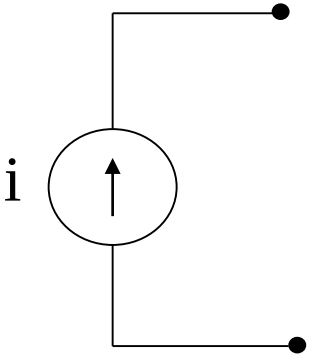

- **The ideal current source will have infinite internal resistance.**
- **The symbols for *independent current sources* are:-**
  - **Small 'i' is used for time varying or constant currents.**
  - **Capital 'I' is used for constant currents only.**

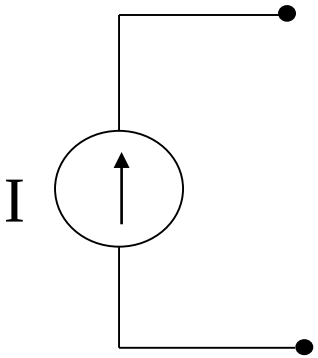

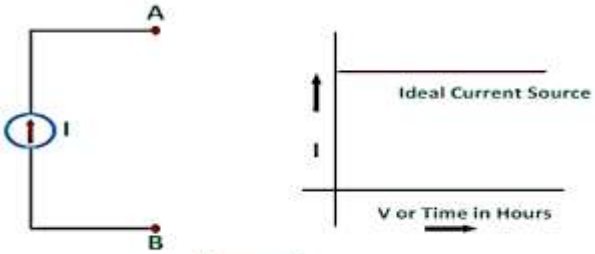

Figure C

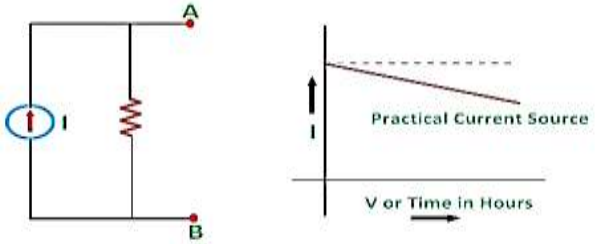

Figure D

- **Dependent (controlled) Sources !**

Dependent Sources

- **An ideal *dependent (or controlled) source* is an active element in which the source quantity is controlled by *another voltage or current* existing in the circuit being analyzed.**

- **There are *four types of dependent sources* :-**
  - **A *voltage* controlled *voltage* source.**
  - **A *current* controlled *voltage* source.**
  - **A *voltage* controlled *current* source.**
  - **A *current* controlled *current* source.**

- *The symbols (diamonds) for dependent voltage sources are:-*

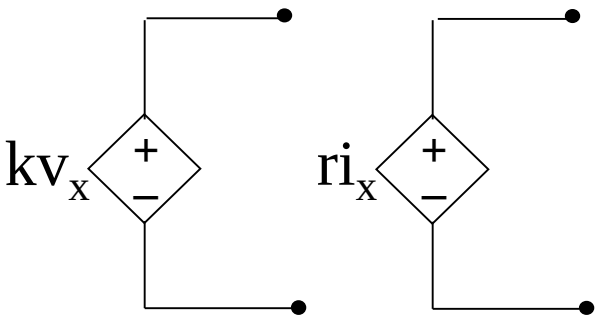

  - ***Voltage controlled voltage source has 'k' which is a dimensionless scaling constant.***

  - ***Current controlled voltage source has a scaling constant 'r' with units of V/A.***

- **Dependent sources …contd !**

Dependent Sources…contd

The symbols for *dependent current sources* are:-

- ***Current controlled current source has a scaling constant 'k' which is a dimensionless scaling constant.***

- ***Voltage controlled current source has a scaling constant 'g' which has units of A/V.***

- **Example dependent source !**

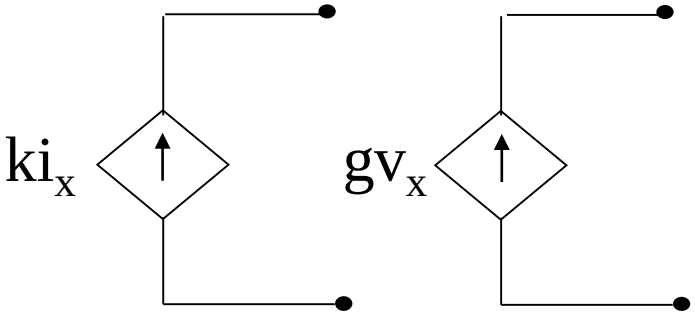

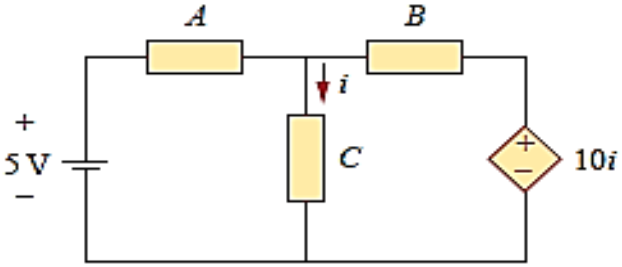

Figure 1.14
The source on the right-hand side is a current-controlled voltage source.

Dependent Source : DC Equivalent Model of a Transistor

- This is the symbol of a transistor.

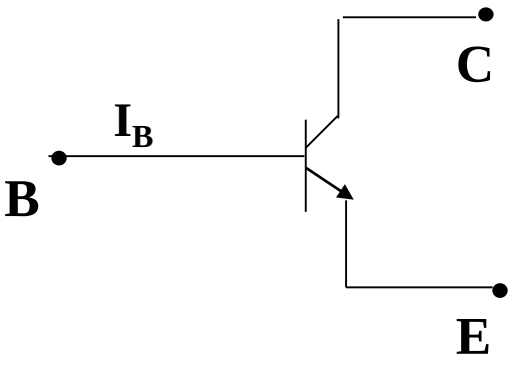

- The dc equivalent model of the transistor.

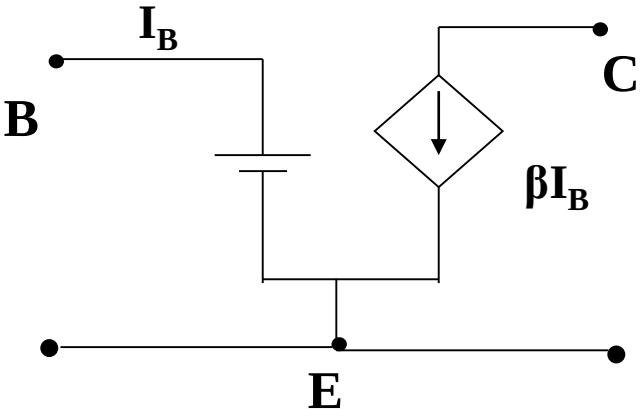

- **Networks & Circuits !**

Networks & Circuits

- **Network :** Interconnection of two or more elements forms **an electrical *network***
- **Circuit** : a network providing one or more closed paths, it is also an **electric *circuit.***

Note: Every circuit is a network, but not all networks are circuits (see Fig. 2.21)!

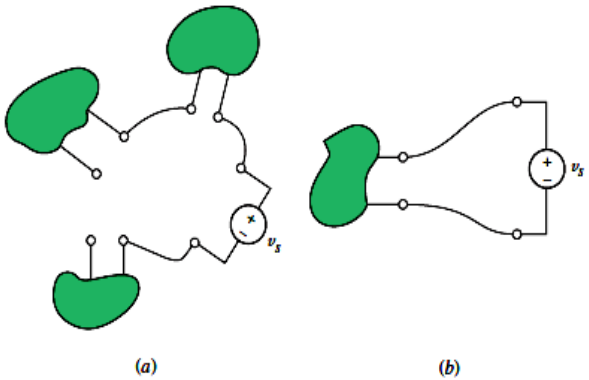

FIGURE 2.21 (*a*) A network that is not a circuit. (*b*) A network that is a circuit.

- **Active Network** : A network that contains at least one active element, such as an independent voltage or current source, is an active network. contains active element
- **Passive Network** : A network that does not contain any active elements is a passive network.no active element
  - **Networks have branches, nodes, paths, loops and meshes etc.**

- **Ohm's Law !**

Ohm's Law

- **Relationship between current and voltage for a resistor : found in 1827 by *Georg Simon Ohm* (German physicist 1787 – 1854)**

- **Forty-six years earlier Henry Cavendish, a semi recluse, had also discovered this relationship.**

- **Ohm's Law states that the *voltage 'v'* across a *conducting material* is directly proportional to the *current 'i'* flowing through the material**
- **Mathematically,**

$$v \propto i$$

$$v = Ri$$

where the constant of proportionality ***R*** is called the ***resistance.*** The unit of resistance is the ***ohm***, which is **V/A** and customarily abbreviated by a capital omega **(Ω)**

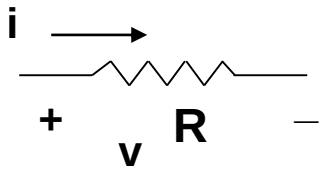

- **Ohm's Law…contd!**

The Resistor

- **In general, *materials resist the flow of electric charge*.**
- **This physical property or ability *to resist current* is known as *resistance* and is represented by symbol 'R'.**

- **For the material shown,**

  $R \propto \ell$

  $R \propto \ell / A$

  So $R = \rho (\ell / A)$

  Where ρ is resistivity in ohm – meters.

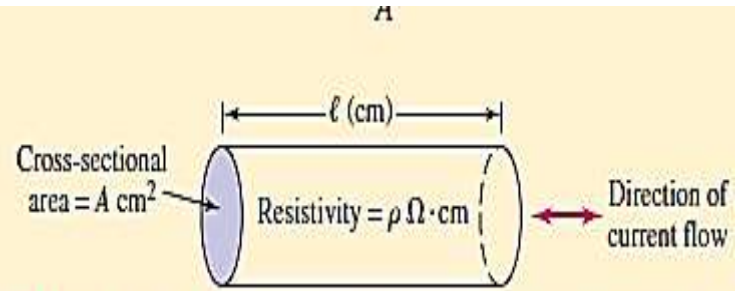

FIGURE 2.26 Definition of geometrical parameters used to compute the resistance of a wire. The resistivity of the material is assumed to be spatially uniform.

- **Resistivity is the measure of the ease with which electrons can travel through a material. High resistivity means greater difficulty, more resistance.**

Silver has 1.64 X 10^{-8} Ω–meter : conductor

Silicon has 6.4 X 10^{2} Ω-meter : semi conductor

Paper has 10^{10} Ω - meter : insulator

R

R

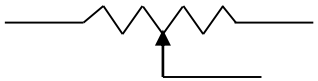

R

- **The circuit symbol for resistance is :--**
- **Resistor is the simplest passive element. *It always absorbs power from the circuit.***
- **Colour coding and power dissipation.**

Ohm's Law/Power Absorption/Conductance

- ***A resistor that obeys Ohm's law is a linear resistor.***
- **Resistance is normally a positive quantity, although negative resistance may be simulated with special circuitry.**

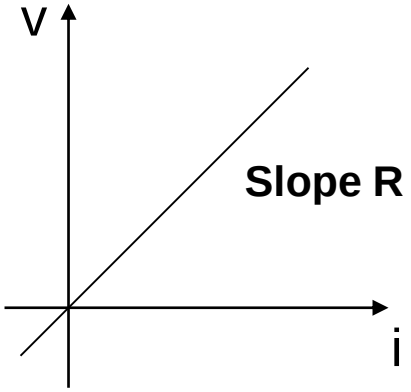

Power Absorption :

- **We know :** $p = vi = i^2 R = v^2 / R$
- **The absorbed power appears as *heat / light* and is always positive.**
- An element ***supplies*** positive power if positive current ***flows out*** of the positive voltage terminal**.** An element ***absorbs*** positive power if positive current ***flows into*** the positive voltage terminal**.**

Conductance :

- **Another useful quantity in circuit analysis is *reciprocal of resistance 'R'*, known as conductance and denoted by *'G'* ℧ where**

  G = 1/R = i/v

  unit is mho (inverted omega) ℧

The SI unit is siemens 1S = 1 = 1 A/V

The Resistor

The 560 Ω resistor shown in Fig. 2.24*b* is connected to a circuit which causes a current of 42.4 mA to flow through it. Calculate the voltage across the resistor and the power it is dissipating.

The voltage across the resistor is given by Ohm's law:

$$v = Ri = (560)(0.0424) = 23.7 \text{ V}$$

The dissipated power can be calculated in several different ways. For instance,

$$p = vi = (23.7)(0.0424) = 1.005 \text{ W}$$

Alternatively,

$$p = v^2/R = (23.7)^2/560 = 1.003 \text{ W}$$

or

$$p = i^2R = (0.0424)^2(560) = 1.007 \text{ W}$$

PRACTICE

With reference to Fig. 2.25, compute the following:

2.10 R if $i = -2\ \mu\text{A}$ and $v = -44$ V.

2.11 The power absorbed by the resistor if $v = 1$ V and $R = 2$ kΩ.

2.12 The power absorbed by the resistor if $i = 3$ nA and $R = 4.7$ MΩ.

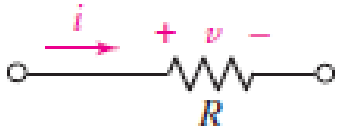

FIGURE 2.25

The Resistor

- **Practice**

A dc power link is to be made between two islands separated by a distance of 24 miles. The operating voltage is 500 kV and the system capacity is 600 MW. Calculate the maximum dc current flow, and estimate the resistivity of the cable, assuming a diameter of 2.5 cm and a solid (not stranded) wire.

THANKS