بِسْمِ اللّٰهِ الرَّحْمٰنِ الرَّحِيْمِ

Ohm's Law

- **Relationship between current and voltage for a resistor : found in 1827 by *Georg Simon Ohm* (German physicist 1787 – 1854)**

- **Forty-six years earlier Henry Cavendish, a semi recluse, had also discovered this relationship.**

- **Ohm's Law states that the *voltage 'v'* across a *conducting material* is directly proportional to the *current 'i'* flowing through the material**
- **Mathematically,**

$$v \propto i$$

$$v = Ri$$

where the constant of proportionality ***R*** is called the ***resistance.*** The unit of resistance is the ***ohm***, which is **V/A** and customarily abbreviated by a capital omega **(Ω)**

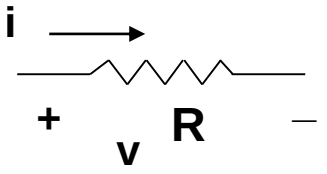

- **Ohm's Law…contd!**

The Resistor

- **In general, *materials resist the flow of electric charge*.**
- **This physical property or ability *to resist current* is known as *resistance* and is represented by symbol 'R'.**

- **For the material shown,**

  $R \propto \ell$

  $R \propto \ell / A$

  So $R = \rho (\ell / A)$

  Where ρ is resistivity in ohm – meters.

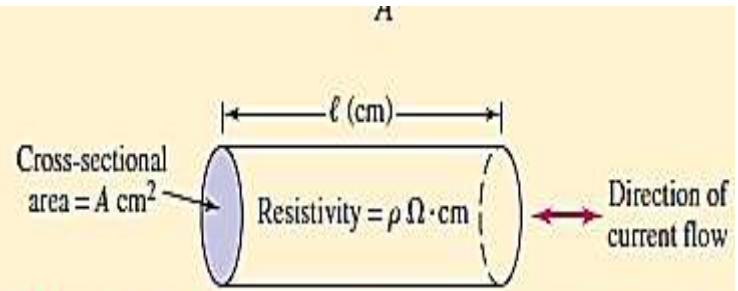

FIGURE 2.26 Definition of geometrical parameters used to compute the resistance of a wire. The resistivity of the material is assumed to be spatially uniform.

- **Resistivity is the measure of the ease with which electrons can travel through a material. High resistivity means greater difficulty, more resistance.**

Silver has 1.64 X 10^{-8} Ω–meter : conductor

Silicon has 6.4 X 10^{2} Ω-meter : semi conductor

Paper has 10^{10} Ω - meter : insulator

R

R

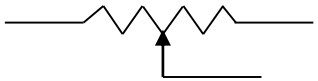

R

- **The circuit symbol for resistance is :--**
- **Resistor is the simplest passive element. *It always absorbs power from the circuit.***
- **Colour coding and power dissipation.**

Ohm's Law/Power Absorption/Conductance

- ***A resistor that obeys Ohm's law is a linear resistor.***
- **Resistance is normally a positive quantity, although negative resistance may be simulated with special circuitry.**

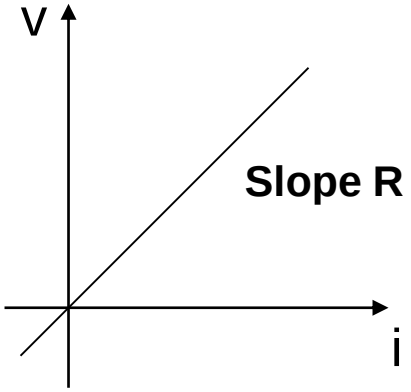

Power Absorption :

- **We know :** $p = vi = i^2 R = v^2 / R$
- **The absorbed power appears as *heat / light* and is always positive.**
- An element ***supplies*** positive power if positive current ***flows out*** of the positive voltage terminal**.** An element ***absorbs*** positive power if positive current ***flows into*** the positive voltage terminal**.**

Conductance :

- **Another useful quantity in circuit analysis is *reciprocal of resistance 'R'*, known as conductance and denoted by *'G'* ℧ where**

  G = 1/R = i/v

  unit is mho (inverted omega) ℧

The SI unit is siemens 1S = 1 = 1 A/V

The Resistor

The 560 Ω resistor shown in Fig. 2.24*b* is connected to a circuit which causes a current of 42.4 mA to flow through it. Calculate the voltage across the resistor and the power it is dissipating.

The voltage across the resistor is given by Ohm's law:

$$v = Ri = (560)(0.0424) = 23.7 \text{ V}$$

The dissipated power can be calculated in several different ways. For instance,

$$p = vi = (23.7)(0.0424) = 1.005 \text{ W}$$

Alternatively,

$$p = v^2/R = (23.7)^2/560 = 1.003 \text{ W}$$

or

$$p = i^2R = (0.0424)^2(560) = 1.007 \text{ W}$$

PRACTICE

With reference to Fig. 2.25, compute the following:

2.10 R if $i = -2\ \mu\text{A}$ and $v = -44$ V.

2.11 The power absorbed by the resistor if $v = 1$ V and $R = 2$ kΩ.

2.12 The power absorbed by the resistor if $i = 3$ nA and $R = 4.7$ MΩ.

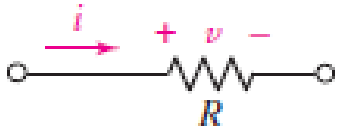

FIGURE 2.25

Practice Problem

A dc power link is to be made between two islands separated by a distance of 24 miles. The operating voltage is 500 kV and the system capacity is 600 MW. Calculate the maximum dc current flow, and estimate the resistivity of the cable, assuming a diameter of 2.5 cm and a solid (not stranded) wire.

3.1 NODES, PATHS, LOOPS, AND BRANCHES

- We now focus our attention on the current-voltage relationships in simple networks of two or more circuit elements. The elements will be connected by wires (sometimes referred to as “leads”), which have ***zero resistance***.
- A point at which two or more elements have a common connection is called a ‘**node**’. ***Note also that every element has a node at each of its ends.***
- If no node was encountered more than once then the set of nodes and elements that we traverse is called a ‘***path***’.
- If the node at which we started is the same node at which we ended, then the path is, by definition, a ***closed path*** or a ‘***loop***’.

In circuits assembled in the real world, the wires will always have finite resistance. However, this resistance is typically so small compared to other resistances in the circuit that we can neglect it without introducing significant error. In our idealized circuits, we will therefore refer to “zero resistance” wires from now on.

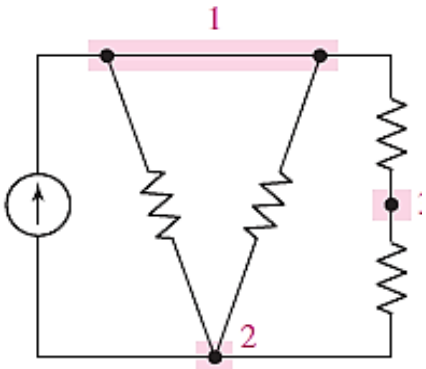

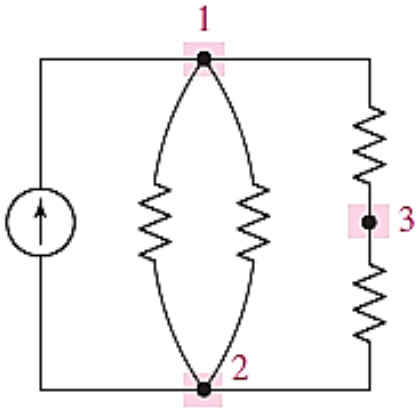

Nodes, Paths, Loops, and Branches….contd

- A *'branch'* is defined as a single path in a network, composed of one simple element and the node at each end of that element.
- A *'mesh'* is a loop which does not contain any other loops within it.
- Two or more elements are in *'series'* if they are cascaded or connected sequentially and *consequently carry the same current.*
- Two or more elements are in *'parallel'* if they are connected to the same two nodes & *consequently have the same voltage across them.*

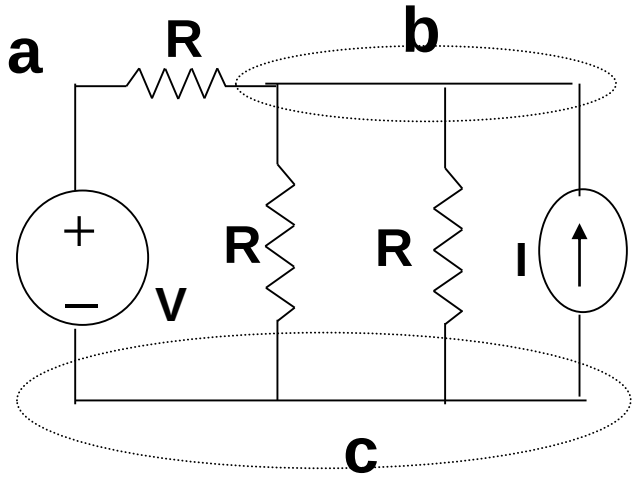

- KCL and KVL.

Kirchhoff's Laws

- **Kirchhoff was a German professor (1824 – 1887).**
- **Ohm's Law alone could not solve all issues pertaining to circuit analysis.**
- **Kirchhoff's Current Law (KCL) states that**

"algebraic sum of the currents entering any node is equal to zero."

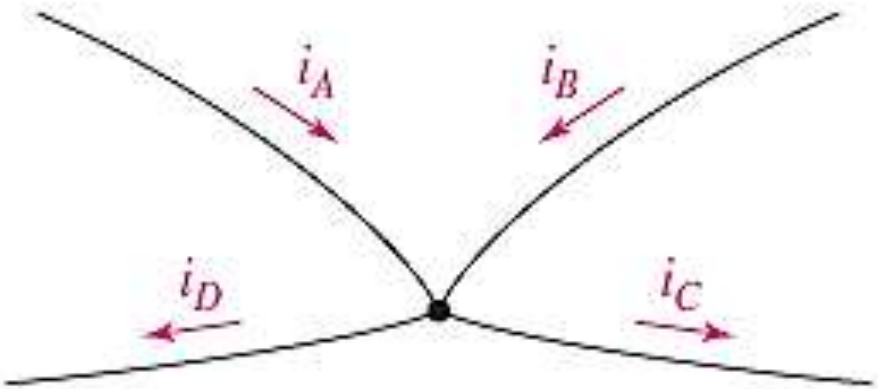

FIGURE 3.2 Example node to illustrate the application of Kirchhoff's current law.

Kirchhoff's Current Law

- Consider the node shown in Fig. The algebraic sum of the four currents entering the node must be zero:

$$i_A + i_B + (-i_C) + (-i_D) = 0$$

- However, the law could be equally well applied to the algebraic sum of the currents *leaving* the node:

$$(-i_A) + (-i_B) + i_C + i_D = 0$$

- We might also wish to equate the sum of the currents having reference arrows directed into the node to the sum of those directed out of the node:

$$i_A + i_B = i_C + i_D$$

which simply states that the sum of the currents going in must equal the sum of the currents going out.

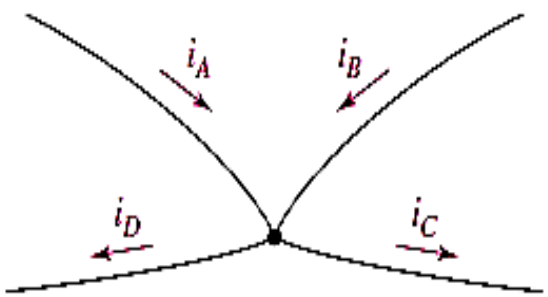

FIGURE 3.2 Example node to illustrate the application of Kirchhoff's current law.

- A compact expression for Kirchhoff's current law is

$$\sum_{n=1}^{N} \mathbf{i_n} = \mathbf{0}$$

which is just a shorthand statement for

$$i_1 + i_2 + i_3 + \cdot \cdot \cdot + i_N = 0$$

- This law represents a mathematical statement of the fact that charge cannot accumulate at a node. ***A node is not a circuit element,*** and it certainly cannot store, destroy, or generate charge. Hence, the currents must sum to zero.

Law of Conservation of Charge

Charge can be transferred from one object to another. The algebraic sum of charge on the two objects will be the same before and after the transfer. This is sometimes called the Law of Conservation of Charge, discovered by Benjamin Franklin (1706 – 1790).

- **Kirchhoff's Laws.**

Kirchhoff's Laws

- **Kirchhoff Voltage Law (KVL) states that "algebraic sum of all the voltages around any closed path (or loop) is equal to zero."**
- **Application of KVL:**
  - **Follow a *clockwise direction.***
  - **Write down the voltage of each element whose positive terminal is entered.**
  - **Write down negative of every voltage first met at the negative sign.**
- **Law of Conservation of Energy.**

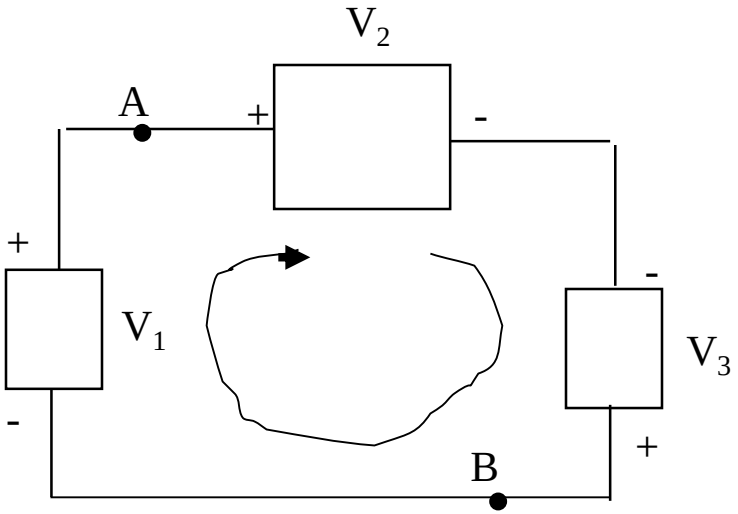

$$-V_1 + V_2 - V_3 = 0$$

$$\sum_{n=1}^{N} V_n = 0$$

Example : KCL

- **For the circuit, compute the *current* through resistor R_3 if the voltage source supplies a current of 3 A.**

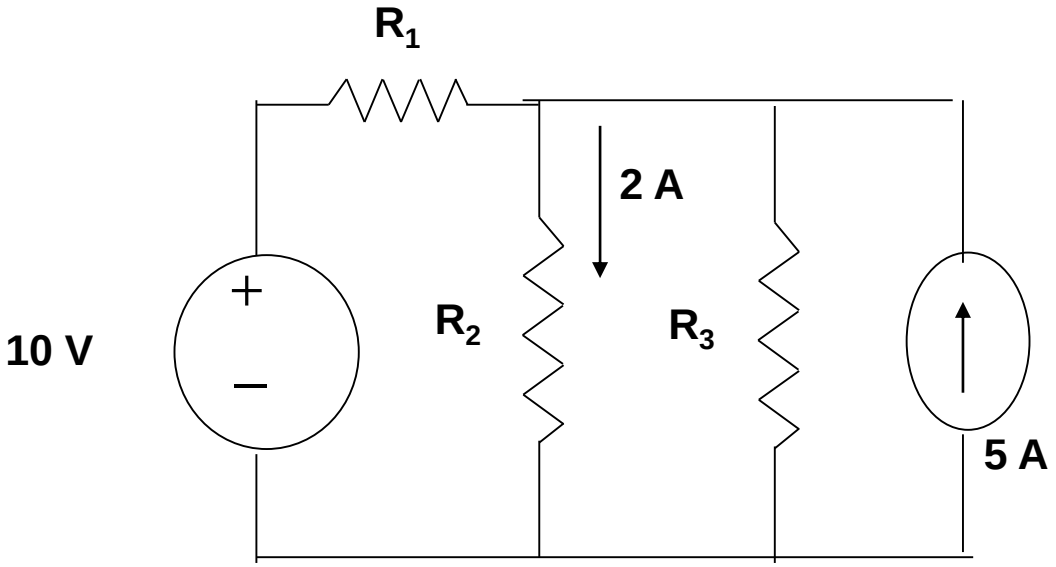

- **…contd!**

Example : KCL….contd

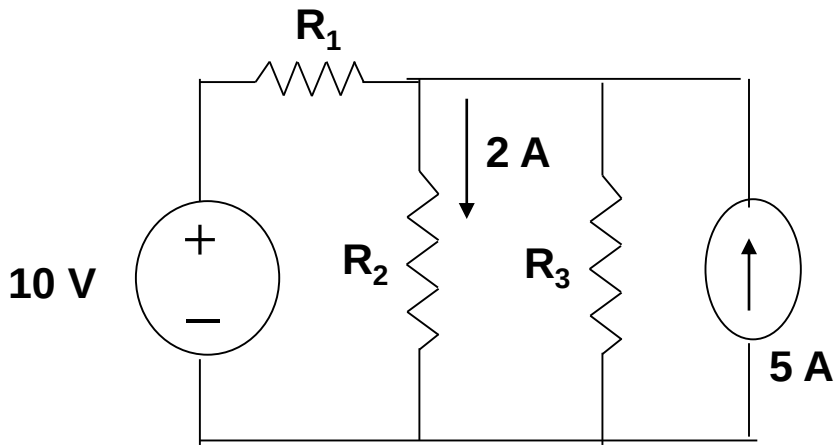

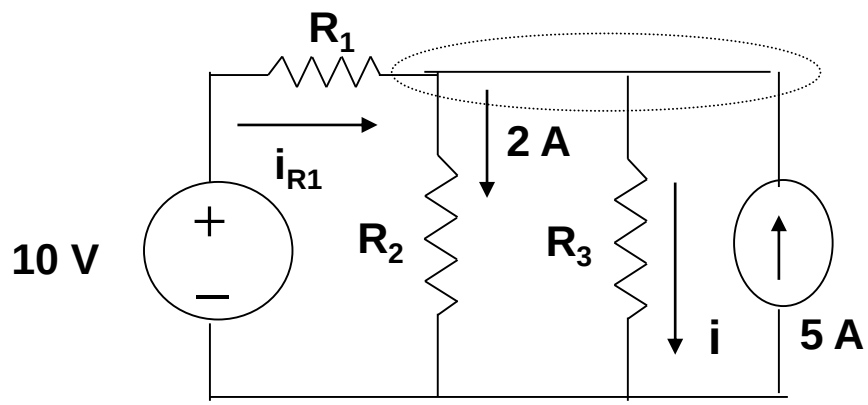

- Label the current through R_3 and R_1 as i and i_{R1} respectively.
- Identify a node at the right top of the circuit.
- Apply KCL at the node and write :

$$i_{R1} + (-2) + (-i) + 5 = 0$$

$$i_{R1} - i + 3 = 0$$

$$\text{So } i = 3 + i_{R1}$$

- Given $i_{R1} = 3A$
- Therefore $i = 3 + 3 = 6$ A.
- Example KVL.

Example : KVL

- **Determine v_X.**

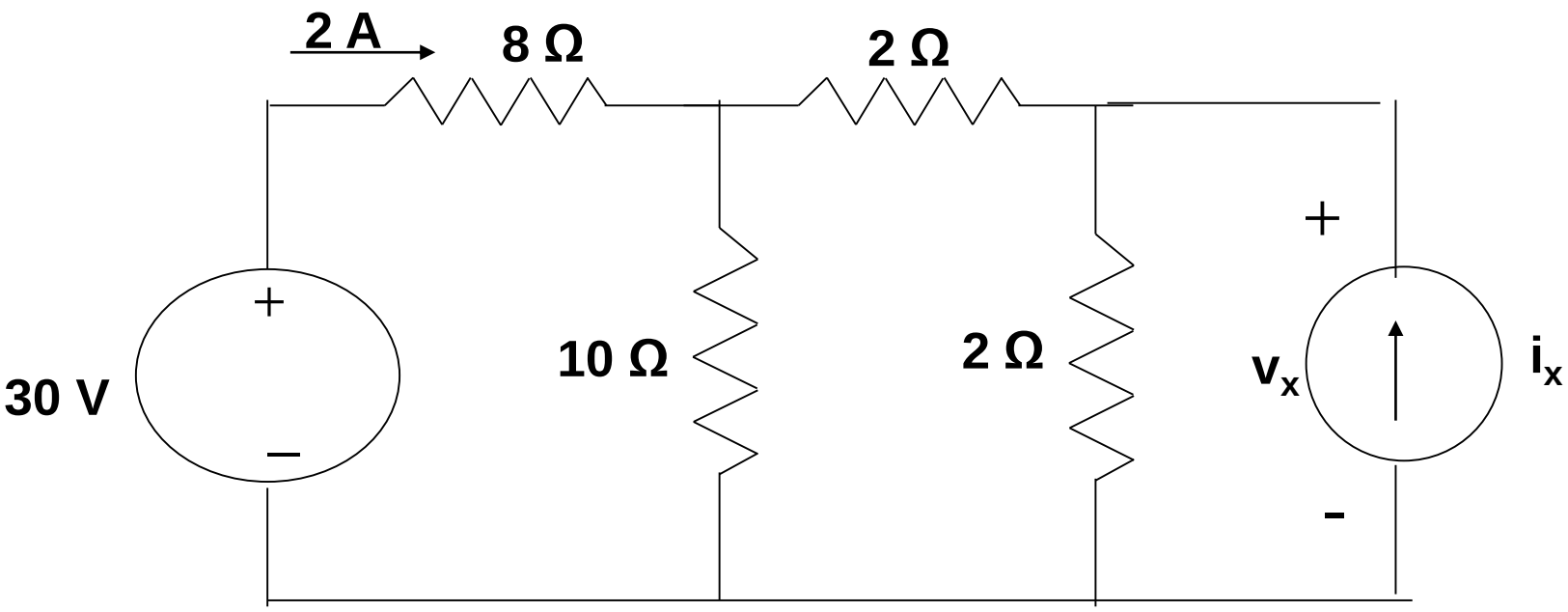

- **…contd !**

Example : KVL…contd

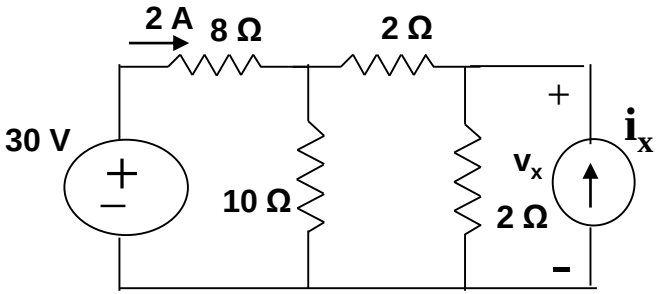

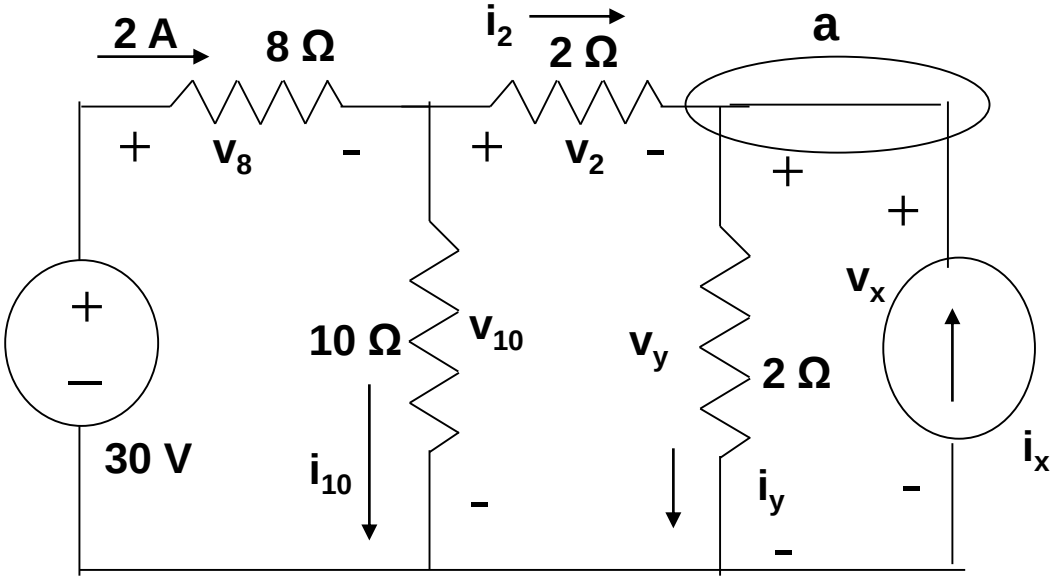

- KCL at node 'a' yields : $i_2 + i_x = i_y$
- KVL for 1st closed path : $30 = 8 \times 2 + v_{10}$ or $v_{10} = 14$
- Then $i_{10} = 14/10 = 1.4$ Hence $i_2 = 2 - 1.4 = 0.6$ A and $v_2 = 2 \times 0.6 = 1.2$ v
- Applying KVL to middle loop : $v_{10} = v_2 + v_y$ or $14 = 1.2 + v_y$
- Therefore $v_y = 12.8$ and so $i_y = 12.8/2 = 6.4$
- Finally $v_x = 2 \times i_y = 2 \times 6.4 = 12.8$ volts.
- Another Example !

Another Example : Dependent Sources

- **Calculate v_y.**

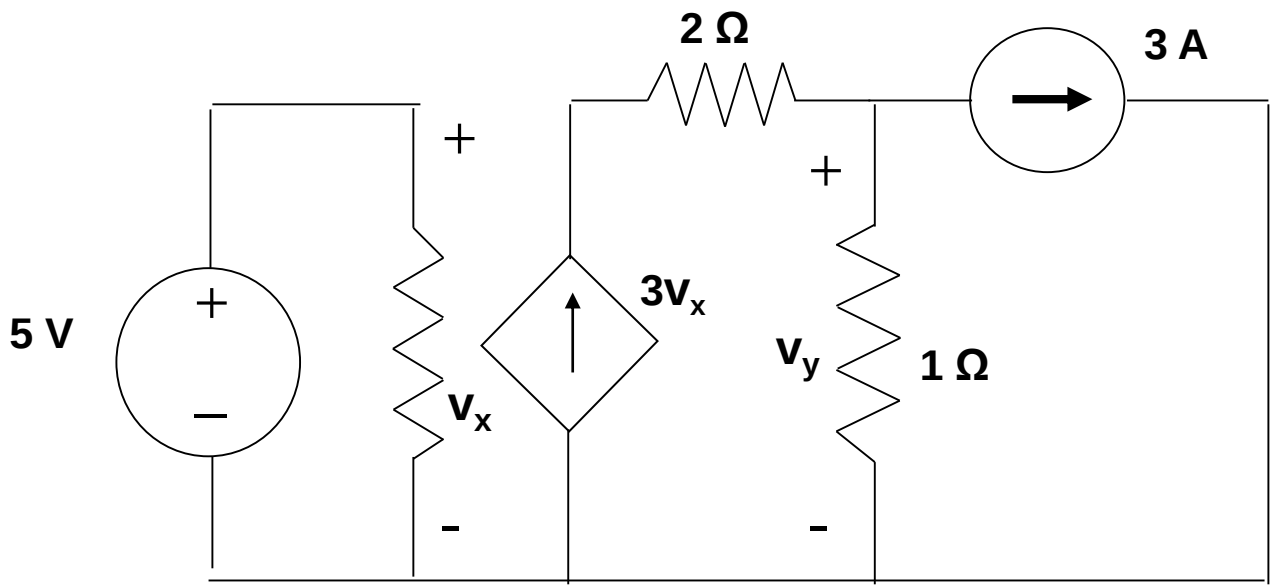

- **v_X = 5 V therefore $3v_X$ = 15 A**
- **The current thru 1 ohm is 15 – 3 = 12 A**
- **So v_Y = 12 volts** QED
- **Yet Another Example !**

Yet Another Example

- If $i_X = 5$ A find v_1 and i_Y. (All resistances are in ohms)

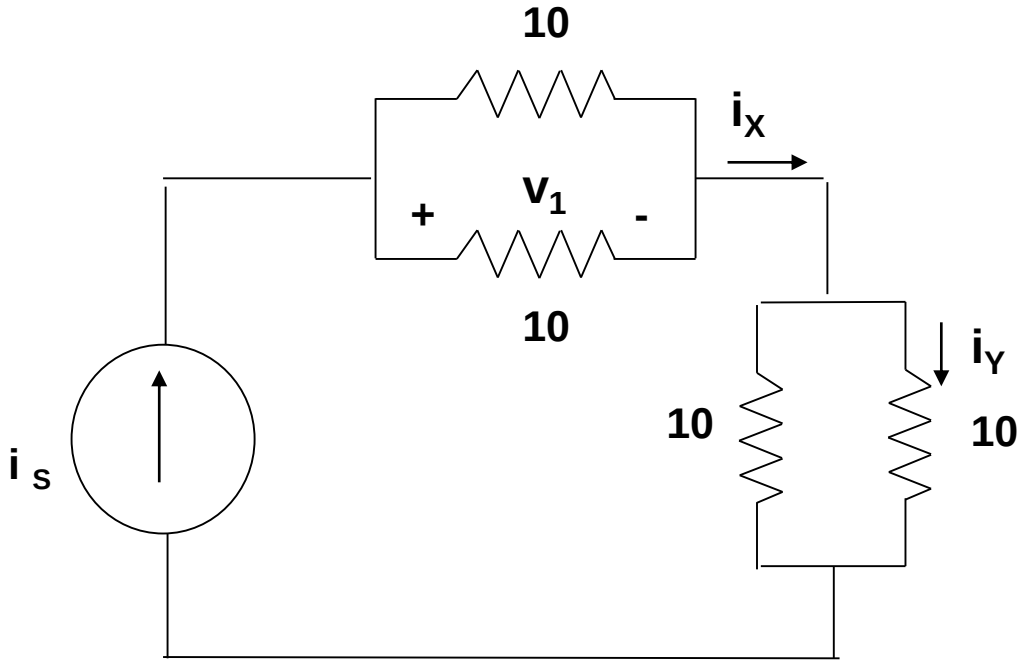

- With $i_X = 5$ A therefore $i_S = 5$ A
- The voltage across the two resistors is the same so equal amount of current flows through each.
- So $i_{v1} = 2.5$ A and therefore $v_1 = 25$ volts
- Also $i_Y = 2.5$ A
- The Single Loop Circuit !

The Single Loop Circuit

- We know Ohm's Law and Kirchhoff's Laws.
- Consider the following circuit :

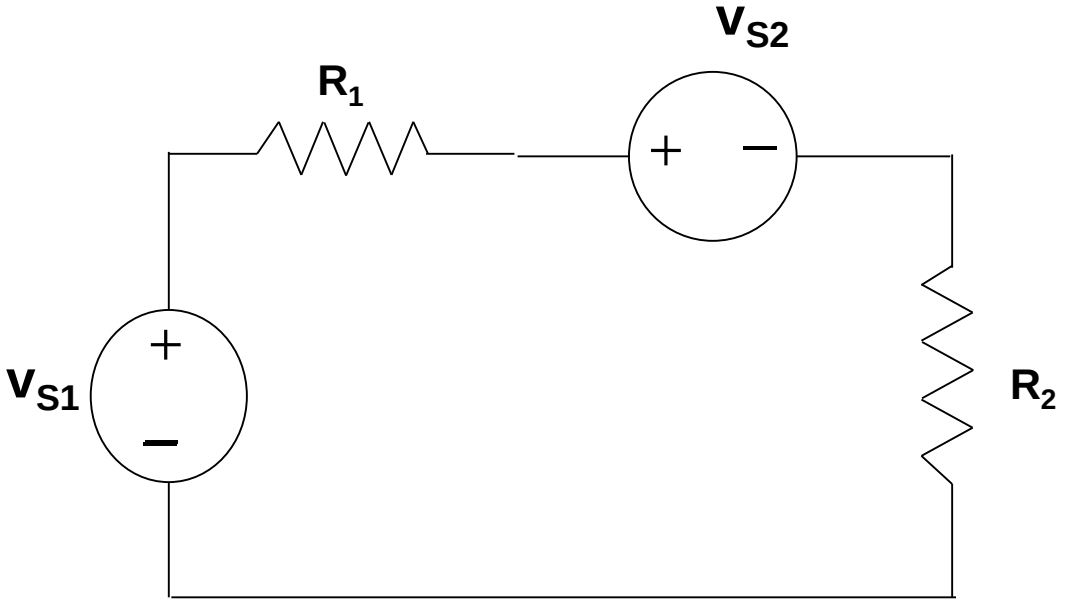

- Note no additional information like given current through a particular element etc is given.
- We analyze this single loop circuit ie:
  - Determine voltage across each element
  - Determine current through each element and
  - Power absorbed by each element
- Contd!

The Single Loop Circuit …contd

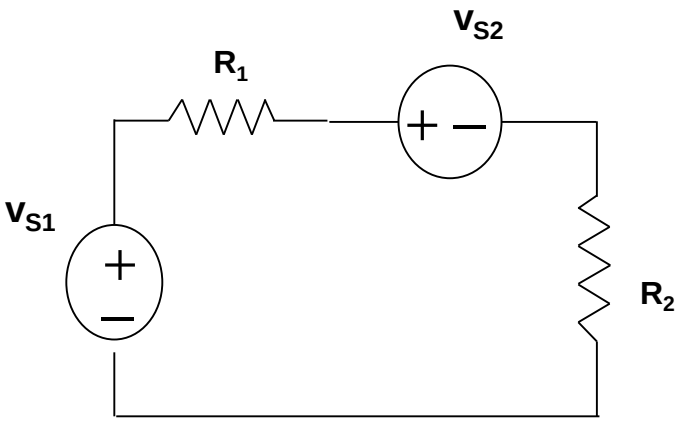

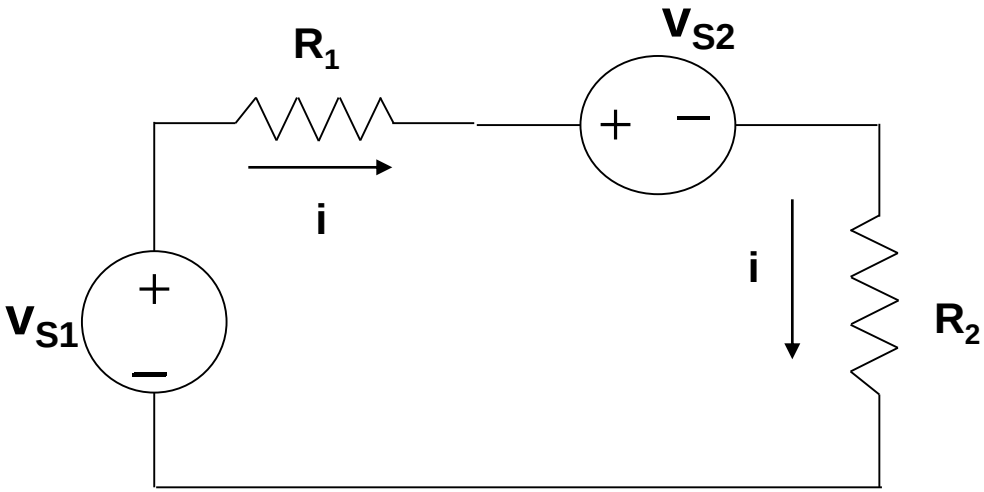

- **Step 1 : Arbitrarily select a clockwise current i as shown :**

- **Note:** ***All the elements in a circuit that carry the same current are said to be connected in series.***

Contd !

The Single Loop Circuit …contd

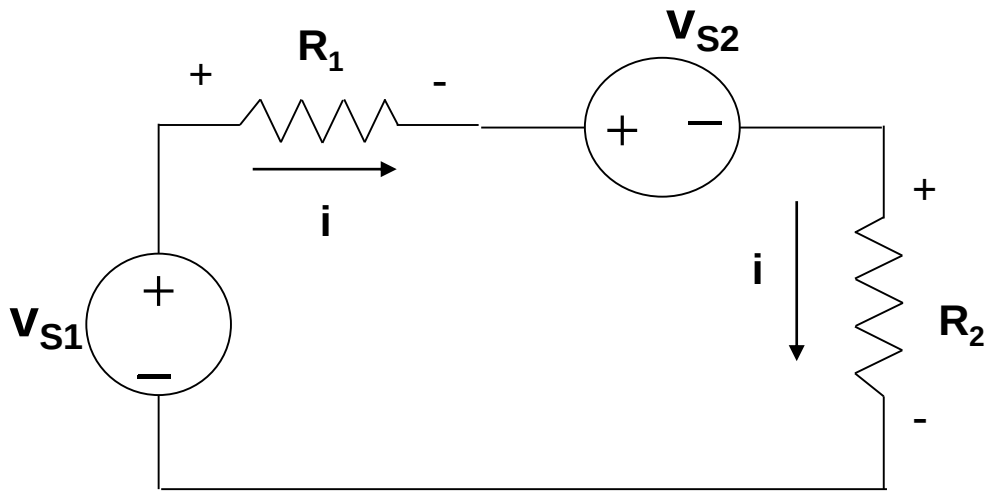

- **Step 2 : Where current enters the element, label the terminal as positive.**
- **Step 3 : Apply KVL (again going in the clockwise direction) :**

$$- v_{S1} + v_{R1} + v_{S2} + v_{R2} = 0$$

- **Applying Ohm's Law to resistive elements :**

$$v_{R1} = R_1\, i \qquad \text{and} \qquad v_{R2} = i\, R_2$$

- **So we get : $i = (v_{S1} - v_{S2}) / (R_1 + R_2)$**
- **Voltage and Power can be found by $v = Ri$, $p = vi$ or $p = i^2R$**
- **The Single Loop Circuit : Power Example!**

The Single Loop Circuit …Power Absorbed

- ***Compute the power absorbed in each element for the circuit shown in Fig a.***

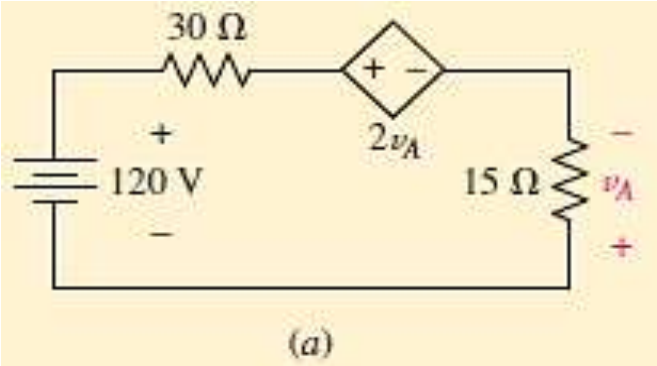

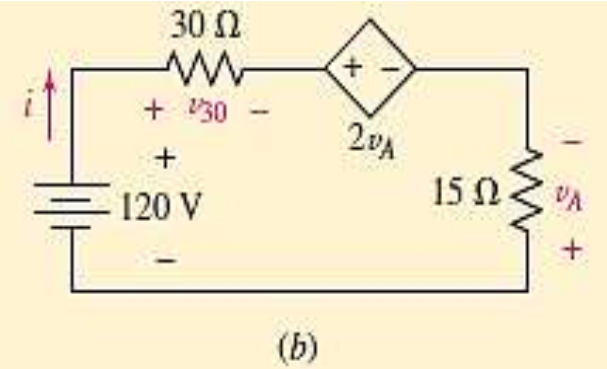

- **Step 1 : Assign a ref direction for current *i and ref polarity for v_{30}*.**
- **Step 2 : Apply KVL**

$$- 120 + v_{30} + 2\, v_A - v_A = 0$$

- **Step 3 : Use Ohm's law**

$$v_{30} = 30\, i \quad \text{and } v_A = -\, 15\, i$$

- **Step 4 : Put these values in first equation and solve for i.**
- **We get i = 8 A Therefore v_A = - 120 V**
- **Hence P_{120v} = - 960 W and P_{30} = 1920 W and P_{2vA} = - 1920 W and P_{15} = 960 W**
- **Note: *The power sources are supplying power and resistors are absorbing power.***

Practice: **In the circuit of Fig, find the power absorbed by each of the five elements in the circuit.**

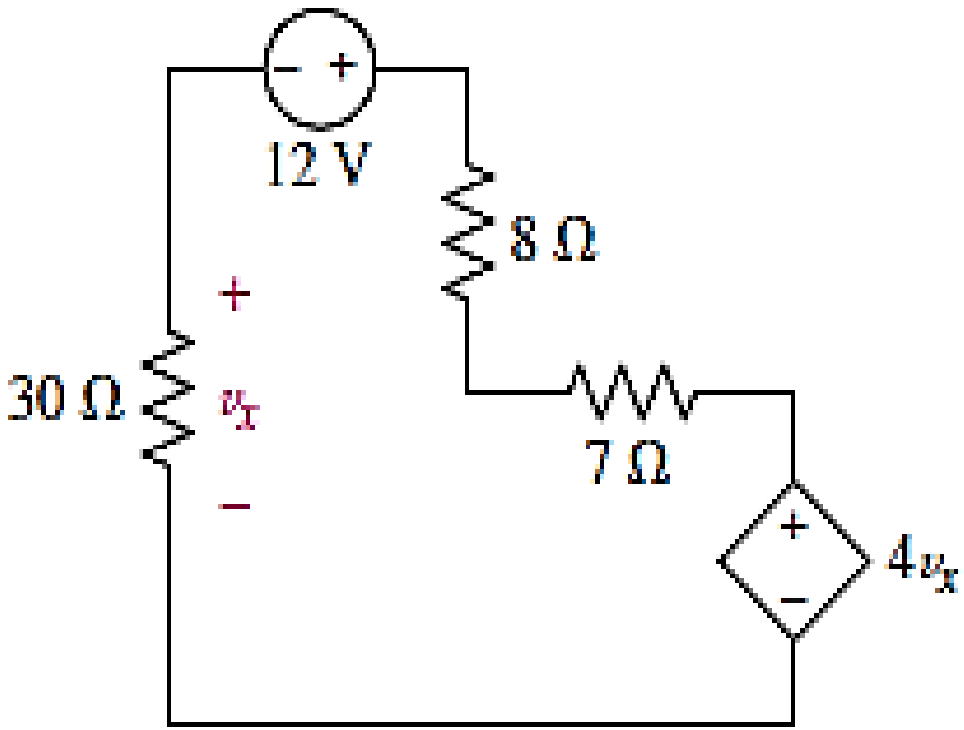

The Single Node - Pair Circuit

In ***a single node – pair circuit***, any number of elements are connected between the *same pair of nodes*. *Elements in a circuit having a common voltage across them are said to be connected in* ***parallel****.*

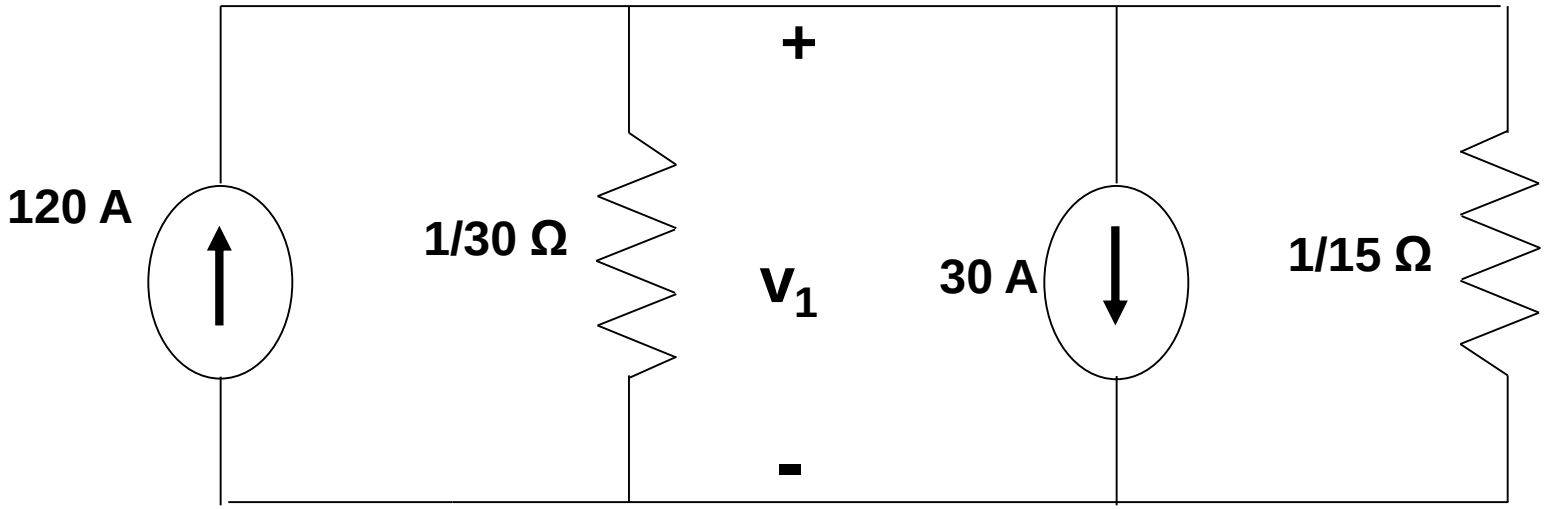

- **Step 1 : Assume a voltage across *any element* assigning an arbitrary polarity as shown.**

….contd !

The Single Node-Pair Circuit….contd

- **Step 2 : Having chosen voltage polarity, *i_1 and i_2 are labeled from positive to negative.***

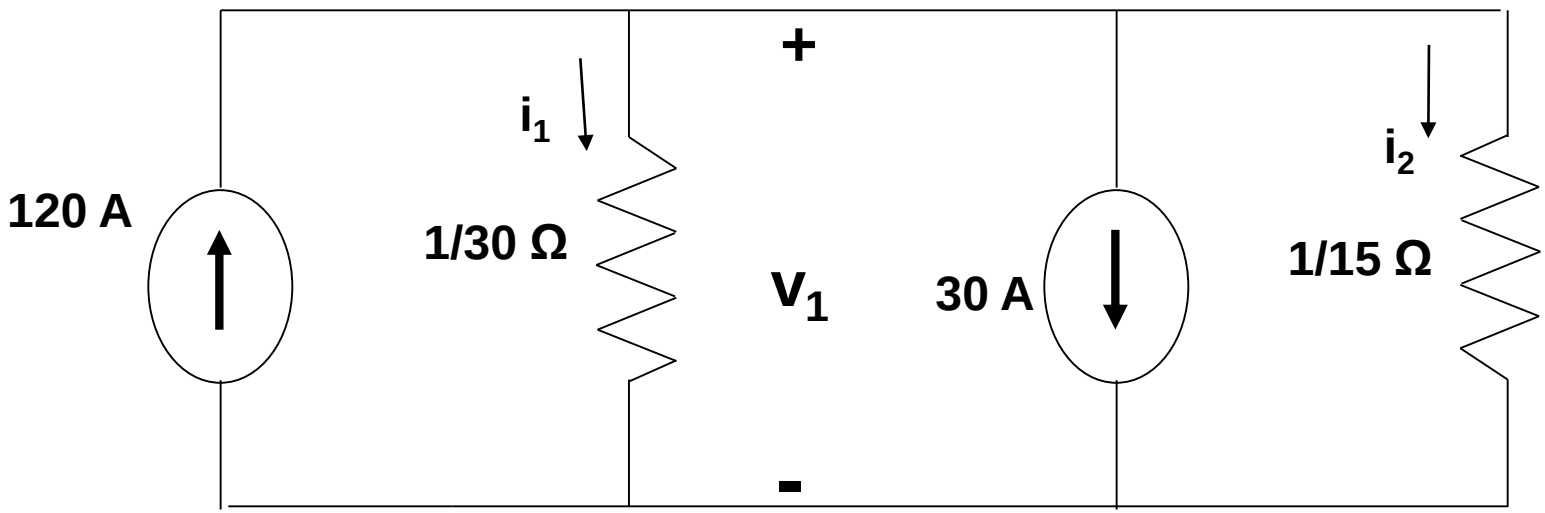

- **Step 3 : Applying KCL :**

  $$120 - i_1 - 30 - i_2 = 0 \quad \text{----------} \quad A$$

- **Now i = v / R gives us $i_1 = 30v_1$ and $i_2 = 15\,v_1$ thus A becomes :**

  $$120 - 30v_1 - 30 - 15v_1 = 0$$

- **So v_1 = 2 volts and i_1 = 60 A and i_2 = 30 A**
- **…contd !**

The Single Node-Pair Circuit….contd

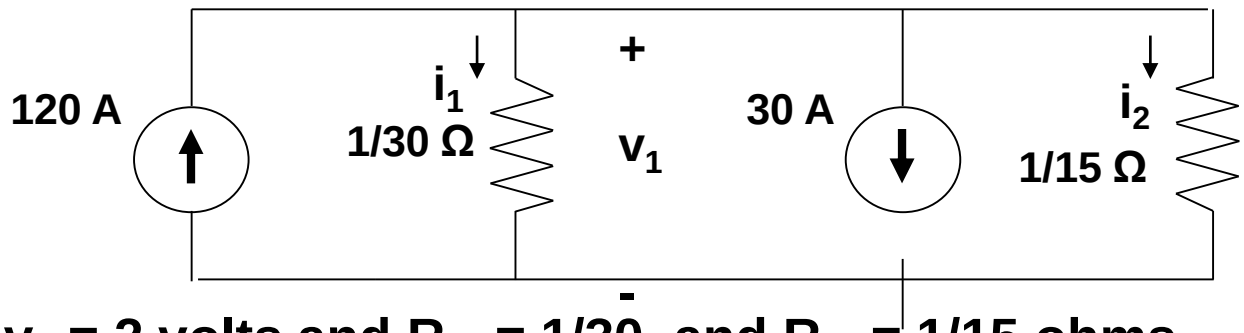

- With v_1 = 2 volts and R_1 = 1/30 and R_2 = 1/15 ohms
- *For power calculations V^2/R* :
  - $P_{R1} = 30\ (2)^2 = 120$ W and
  - $P_{R2} = 15\ (2)^2 = 60$ W
- *For the two sources* :
  - P_{120A} = - (120) (2) = - 240 W (Current entering –VE TO + VE)
  - P_{30A} = 30 (2) = 60 W (Current entering +VE TO –VE)
- Note : 120 A source is delivering power and 30 A source is absorbing power.
- *Total power is equal to zero.*
- Recall current coming out of +ve terminal of a battery and thus the source is delivering power.
- Examples !

Example : KCL

- ***Find the power absorbed by 8A source*.**

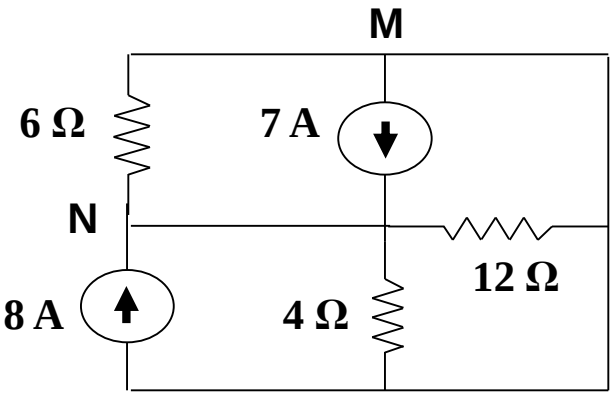

- **How to proceed??**

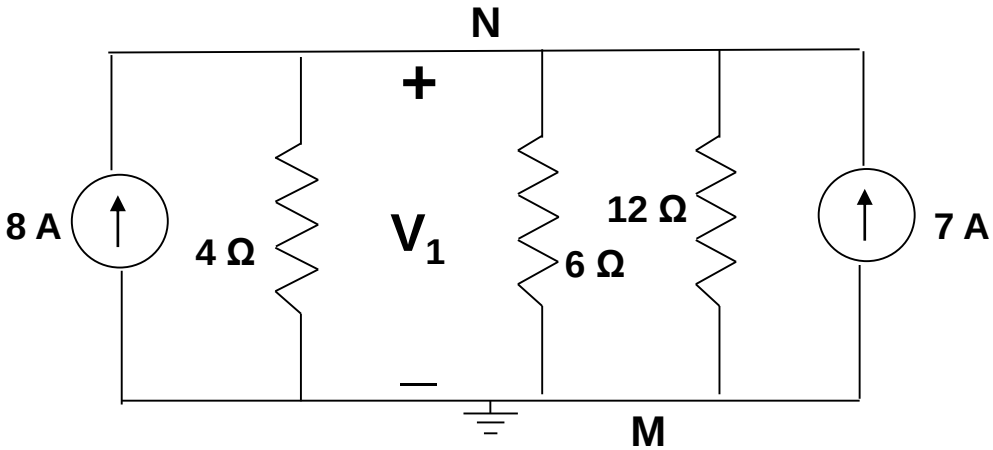

- **So $v_1/4 + v_1/6 + v_1/12 = 8 + 7$ and $v_1 = 30$ volts**
- **Hence P_{8A} = - 240 watts (generated)**

- **Examples….contd !**

Example : KCL

- *Find the labelled currents.*

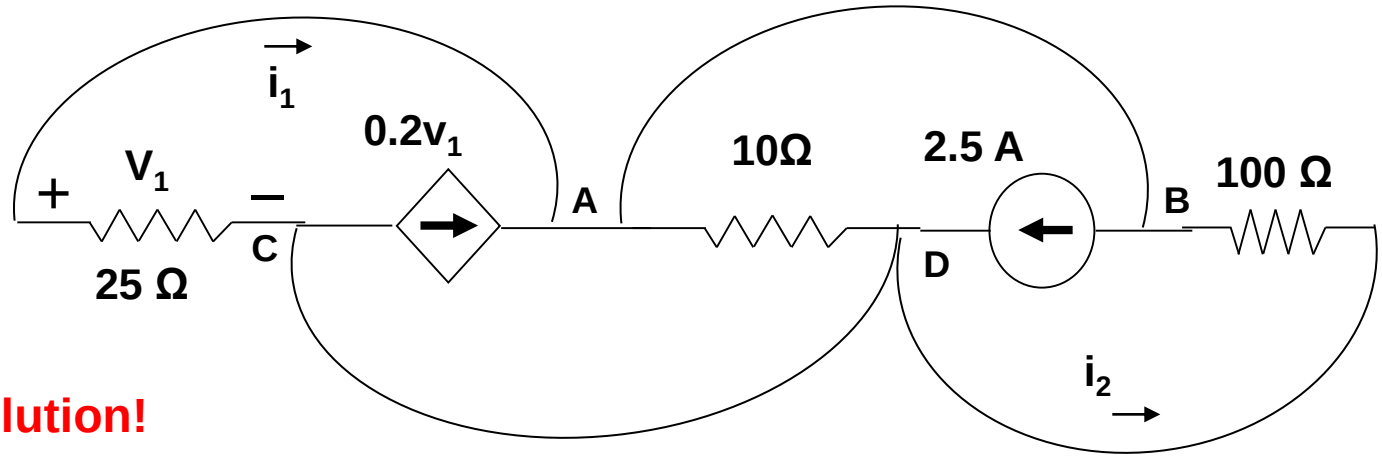

- **Solution!**

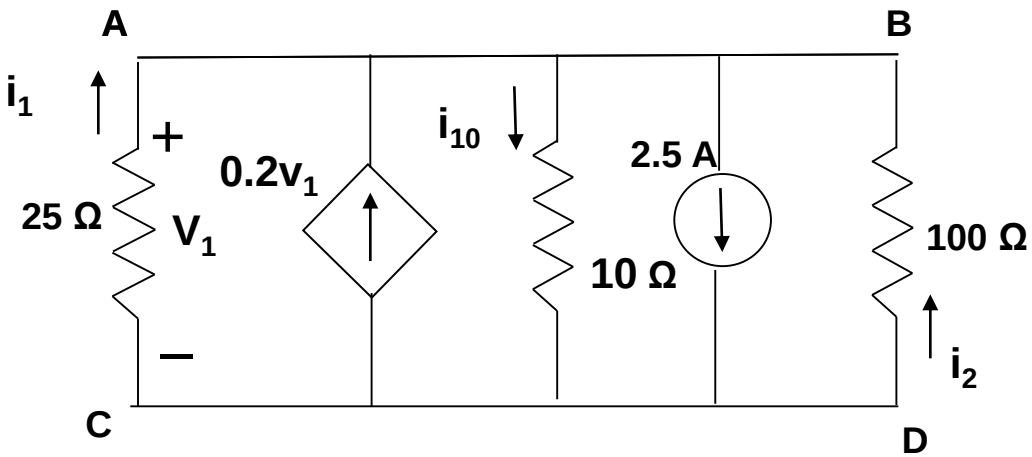

- **So KCL at top node: $i_1 + 0.2v_1 + i_2 - i_{10} - 2.5 = 0$ and $i_{10} = v_1/10$ etc etc**
- **Hence $v_1 = 50$ volts and the currents can be determined and verified by KCL.**
- **Series and Parallel Connected Independent Sources !**

THANKS