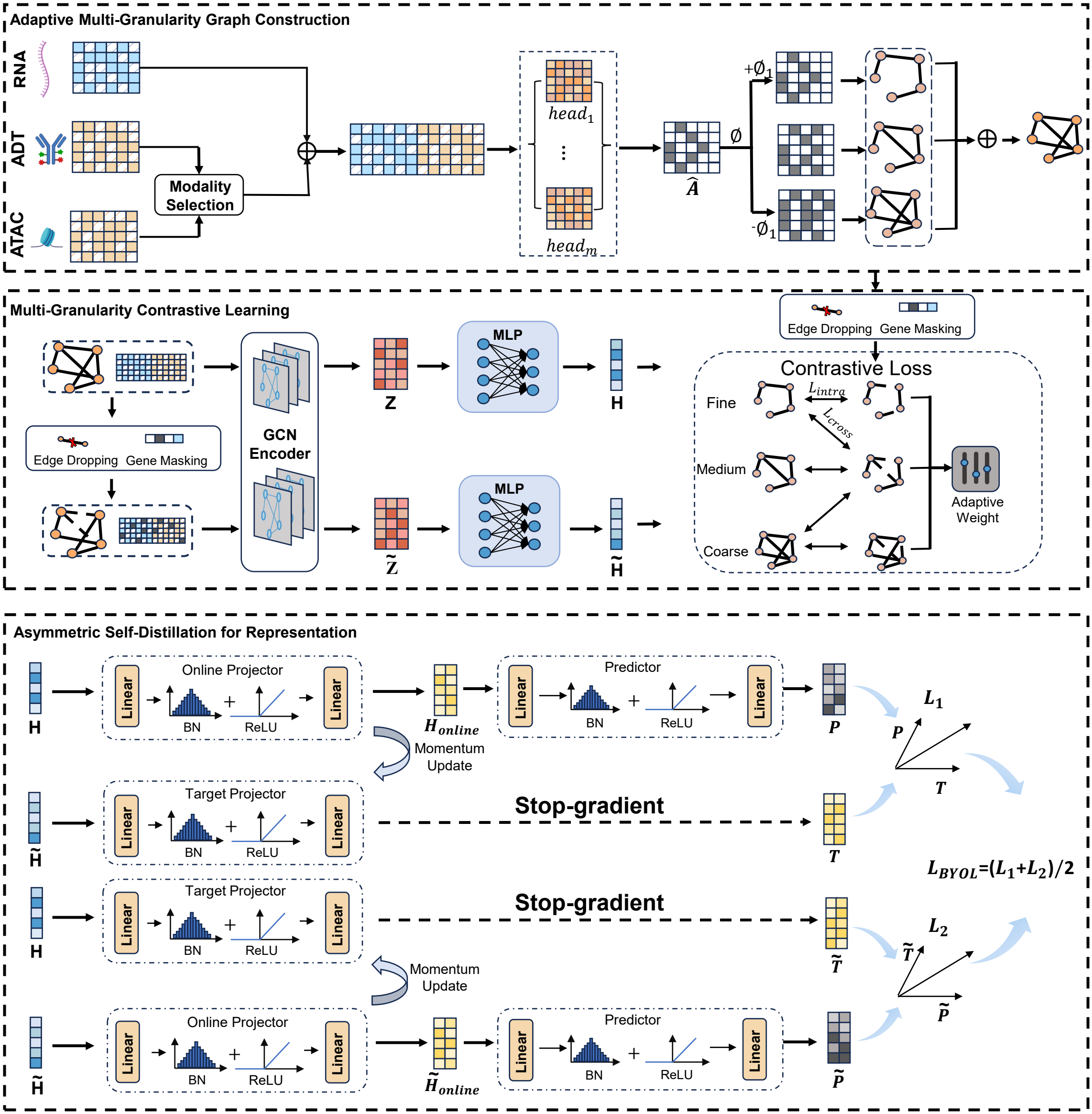
Adaptive Multi-Granularity Graph Construction
RNA
ADT
ATAC
Modality Selection
head1
headm
Ø
+Ø1
-Ø1
Multi-Granularity Contrastive Learning
Edge Dropping
Gene Masking
GCN Encoder
Z
MLP
H
Contrastive Loss
Fine
Medium
Coarse
Lintra
Lcross
Adaptive Weight
Asymmetric Self-Distillation for Representation
Online Projector
Target Projector
Predictor
Linear
BN
ReLU
Momentum Update
Stop-gradient
L1
L2
LBYOL=(L1+L2)/2