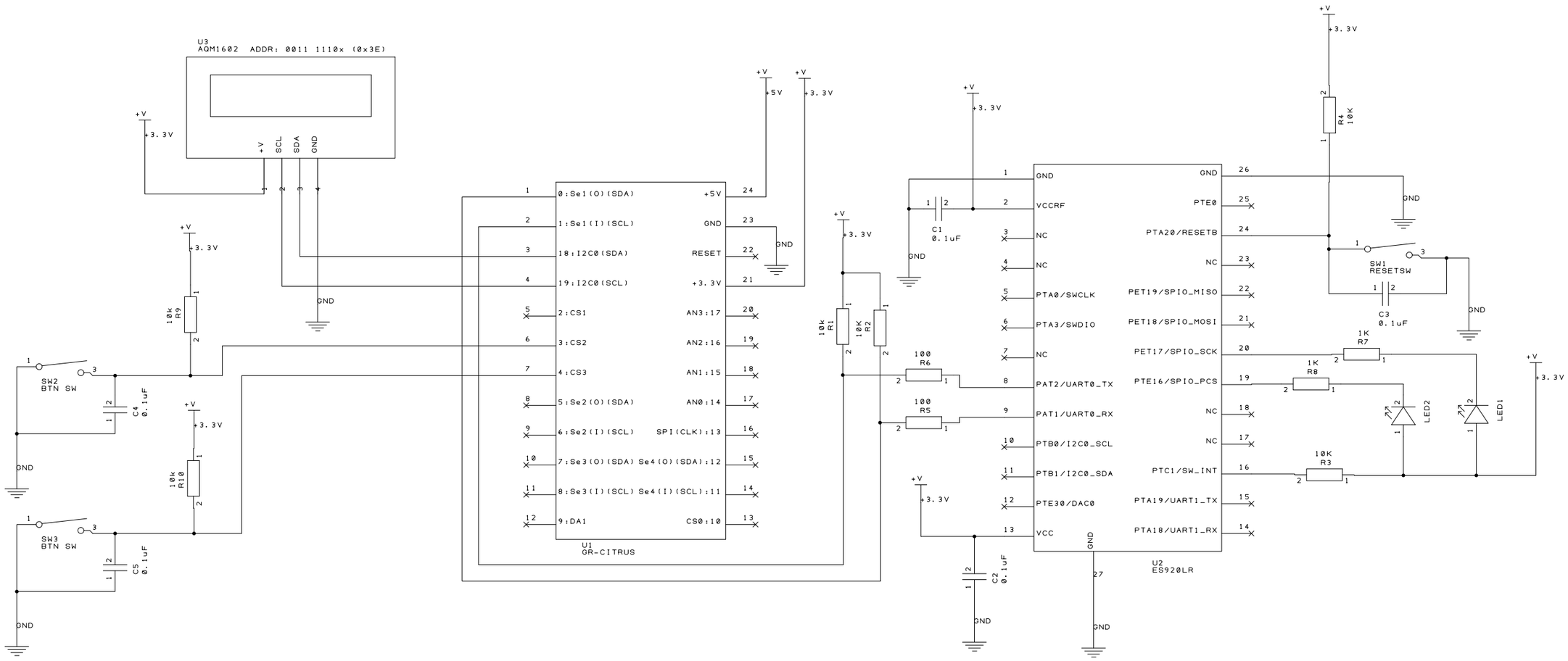

PROJECT:	CANSAT 2020 Kushimoto
DRAWING TITLE:	TERMINAL
DRAWN BY:	Minao Yamamoto
REVISION:	1.01
SHEET:	1 OF 1
STATUS:	
DATE:	2020/9/17