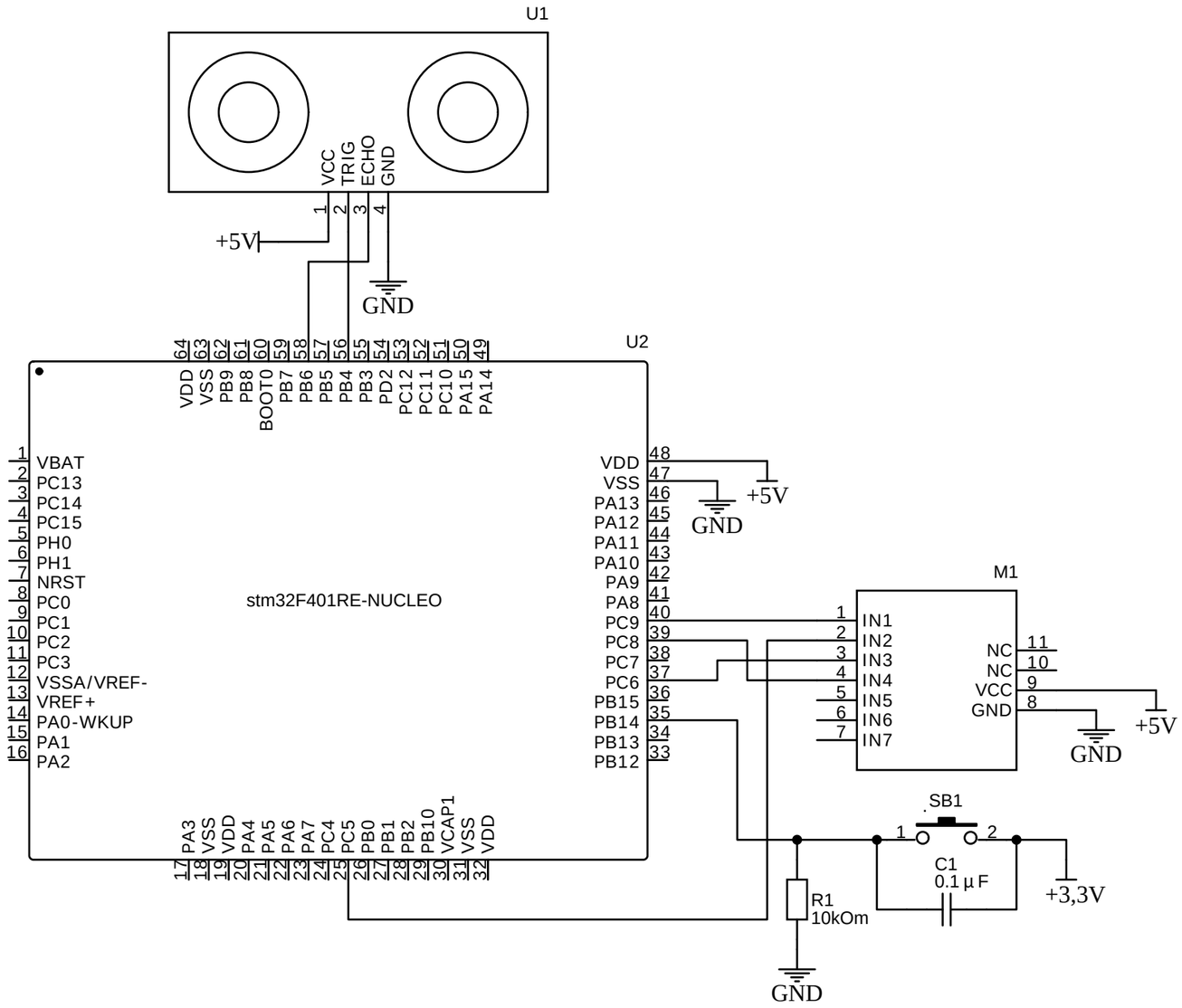

TITLE: Sheet_2		REV: 1.0
	Company: Your Company	Sheet: 1/1
	Date: 2021-05-27 Drawn By: Dmitryk O.O.	