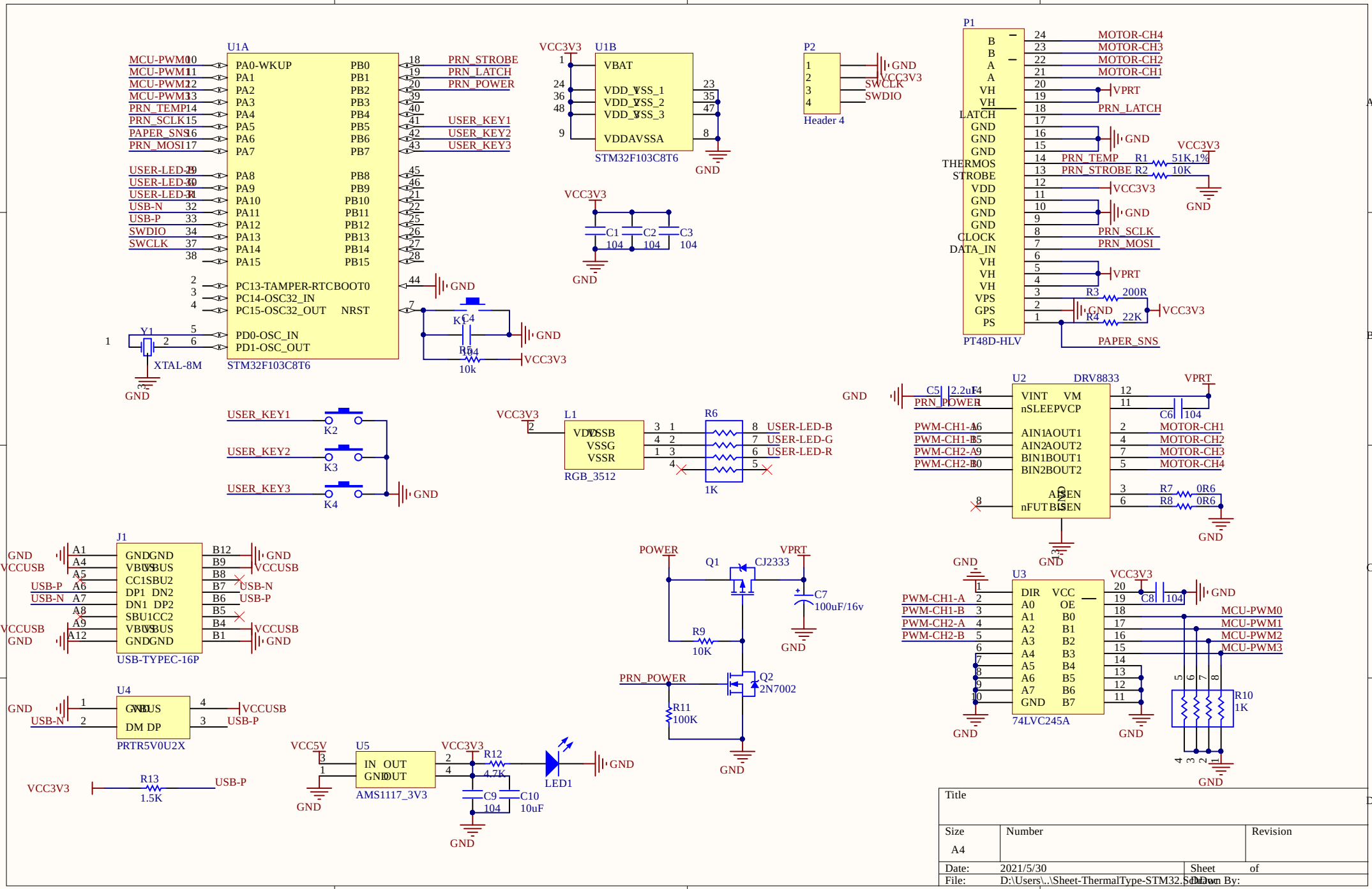
U1A
STM32F103C8T6
PA0-WKUP
PA1
PA2
PA3
PA4
PA5
PA6
PA7
PA8
PA9
PA10
PA11
PA12
PA13
PA14
PA15
PB0
PB1
PB2
PB3
PB4
PB5
PB6
PB7
PB8
PB9
PB10
PB11
PB12
PB13
PB14
PB15
PC13-TAMPER-RTC
PC14-OSC32_IN
PC15-OSC32_OUT
PD0-OSC_IN
PD1-OSC_OUT
BOOT0
NRST
MCU-PWM0
MCU-PWM1
MCU-PWM2
MCU-PWM3
PRN_TEMP
PRN_SCLK
PAPER_SNS
PRN_MOSI
USER-LED-R
USER-LED-G
USER-LED-B
USB-N
USB-P
SWDIO
SWCLK
PRN_STROBE
PRN_LATCH
PRN_POWER
USER_KEY1
USER_KEY2
USER_KEY3
Y1
XTAL-8M
K1
C4
R5
10k
U1B
VBAT
VDD_1
VDD_2
VDD_3
VSS_1
VSS_2
VSS_3
VDDAVSSA
C1
C2
C3
104
P2
Header 4
P1
PT48D-HLV
B
A
VH
LATCH
GND
THERMOS
STROBE
VDD
CLOCK
DATA_IN
VPS
GPS
PS
MOTOR-CH4
MOTOR-CH3
MOTOR-CH2
MOTOR-CH1
VPRT
PRN_TEMP
PRN_STROBE
R1
51K,1%
R2
10K
R3
200R
R4
22K
PAPER_SNS
U2
DRV8833
VINT
nSLEEP
AIN1
AIN2
BIN1
BIN2
nFUT
VM
VCP
AOUT1
AOUT2
BOUT1
BOUT2
AISEN
BISEN
C5
2.2uF
C6
R7
0R6
R8
0R6
L1
RGB_3512
R6
1K
USER-LED-B
USER-LED-G
USER-LED-R
K2
K3
K4
J1
USB-TYPEC-16P
GND
VCCUSB
USB-P
USB-N
CC1
CC2
DP1
DN1
DP2
DN2
SBU1
SBU2
U4
PRTR5V0U2X
DM
DP
R13
1.5K
U5
AMS1117_3V3
IN
OUT
VCC5V
VCC3V3
R12
4.7K
C9
104
C10
10uF
LED1
POWER
Q1
CJ2333
C7
100uF/16v
R9
10K
PRN_POWER
Q2
2N7002
R11
100K
U3
74LVC245A
DIR
A0
A1
A2
A3
A4
A5
A6
A7
VCC
OE
B0
B1
B2
B3
B4
B5
B6
B7
C8
R10
1K
Title
Size
A4
Number
Revision
Date:
2021/5/30
Sheet
of
File:
D:\Users\..\Sheet-ThermalType-STM32.SchDoc
Drawn By:

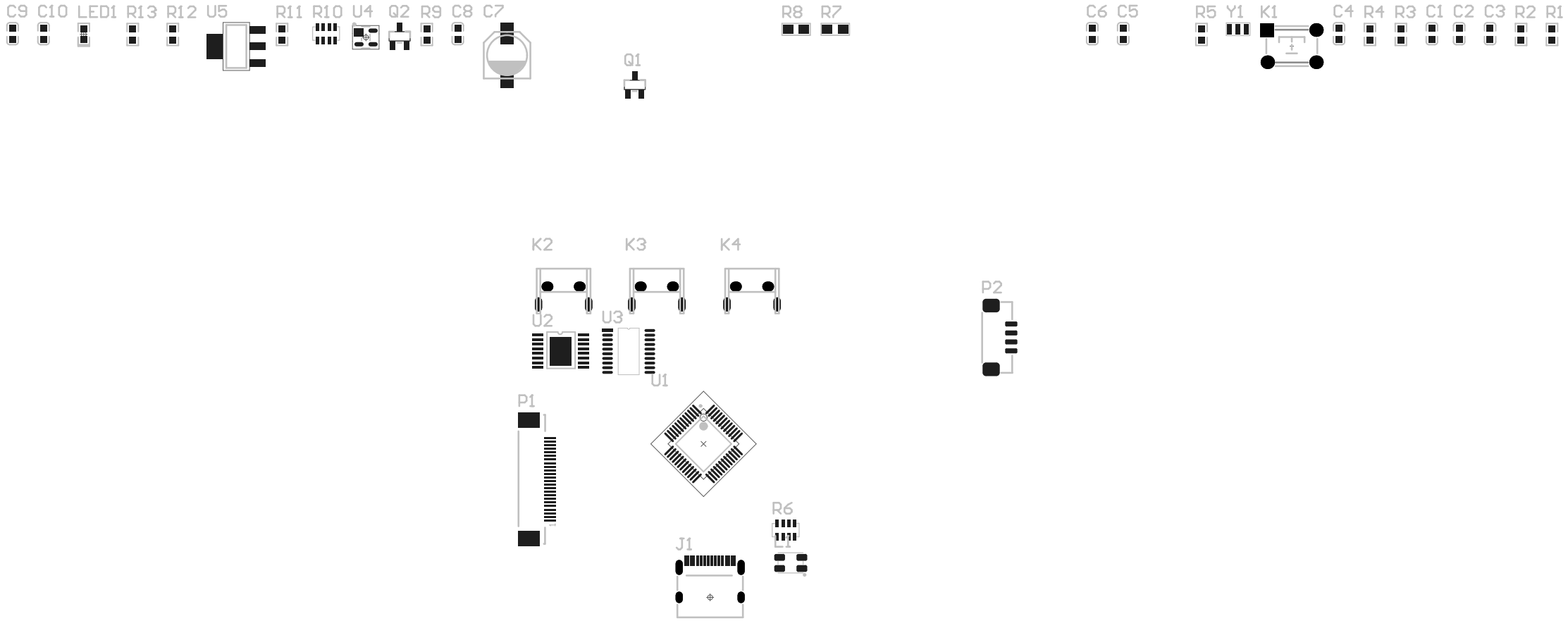
C9
C10
LED1
R13
R12
U5
R11
R10
U4
Q2
R9
C8
C7
Q1
R8
R7
C6
C5
R5
Y1
K1
C4
R4
R3
C1
C2
C3
R2
R1
K2
K3
K4
P2
U2
U3
U1
P1
R6
L1
J1