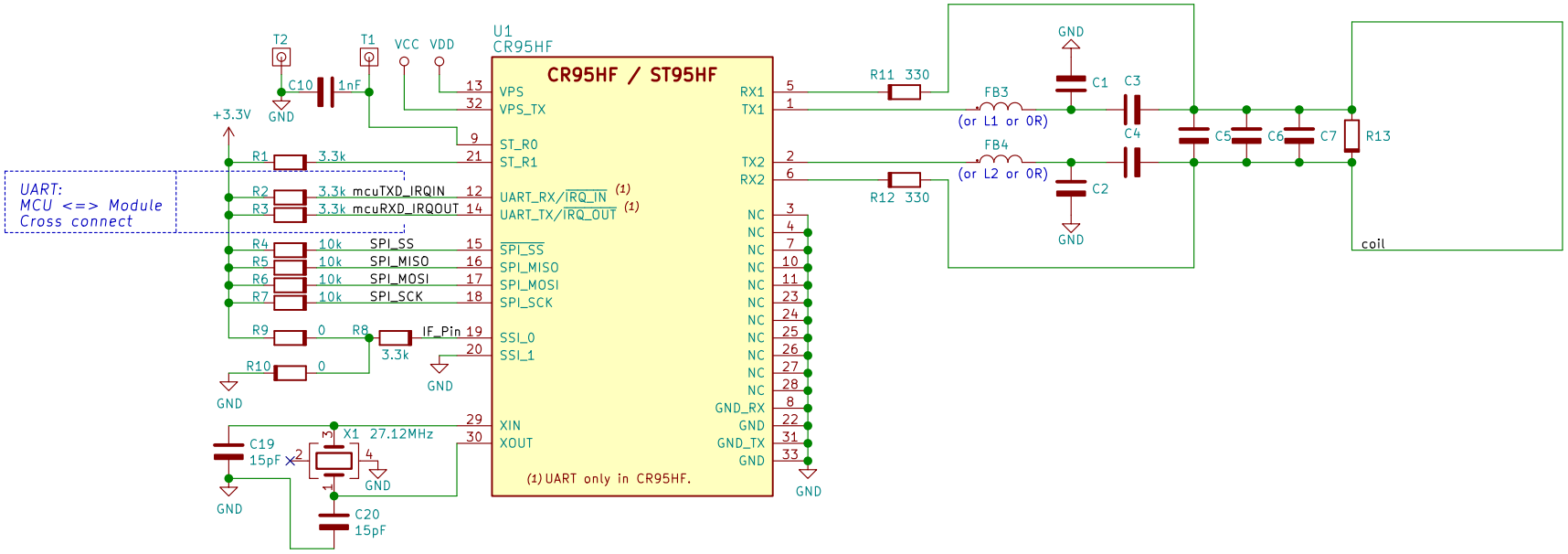

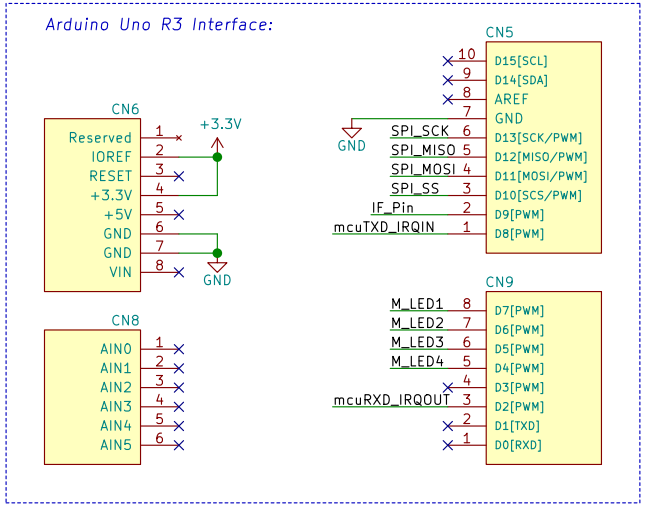

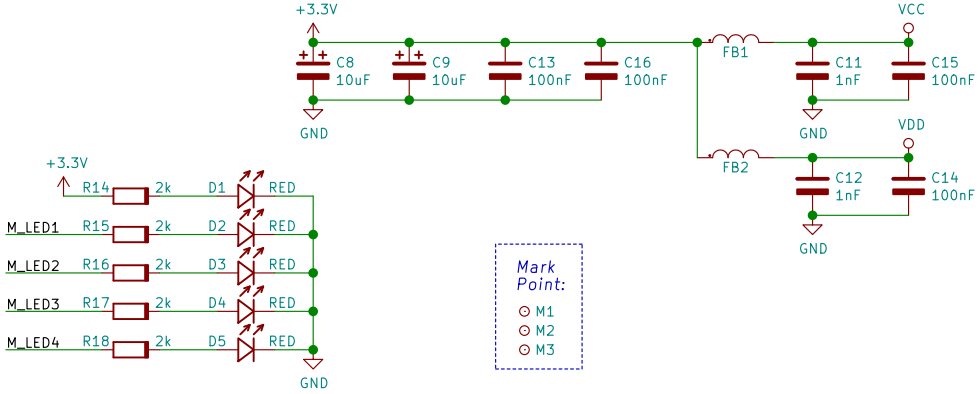

Sheet: 1/1		岁月声响
File: Nu-CR95HF.sch		
Title: Nu-CR95HF Module		
Size: A4	Date(y-m-d): 2018-06-07	**Rev:** 1.0
KiCad 5.0.0 rc2	shop273307141.taobao.com	Id: 1804