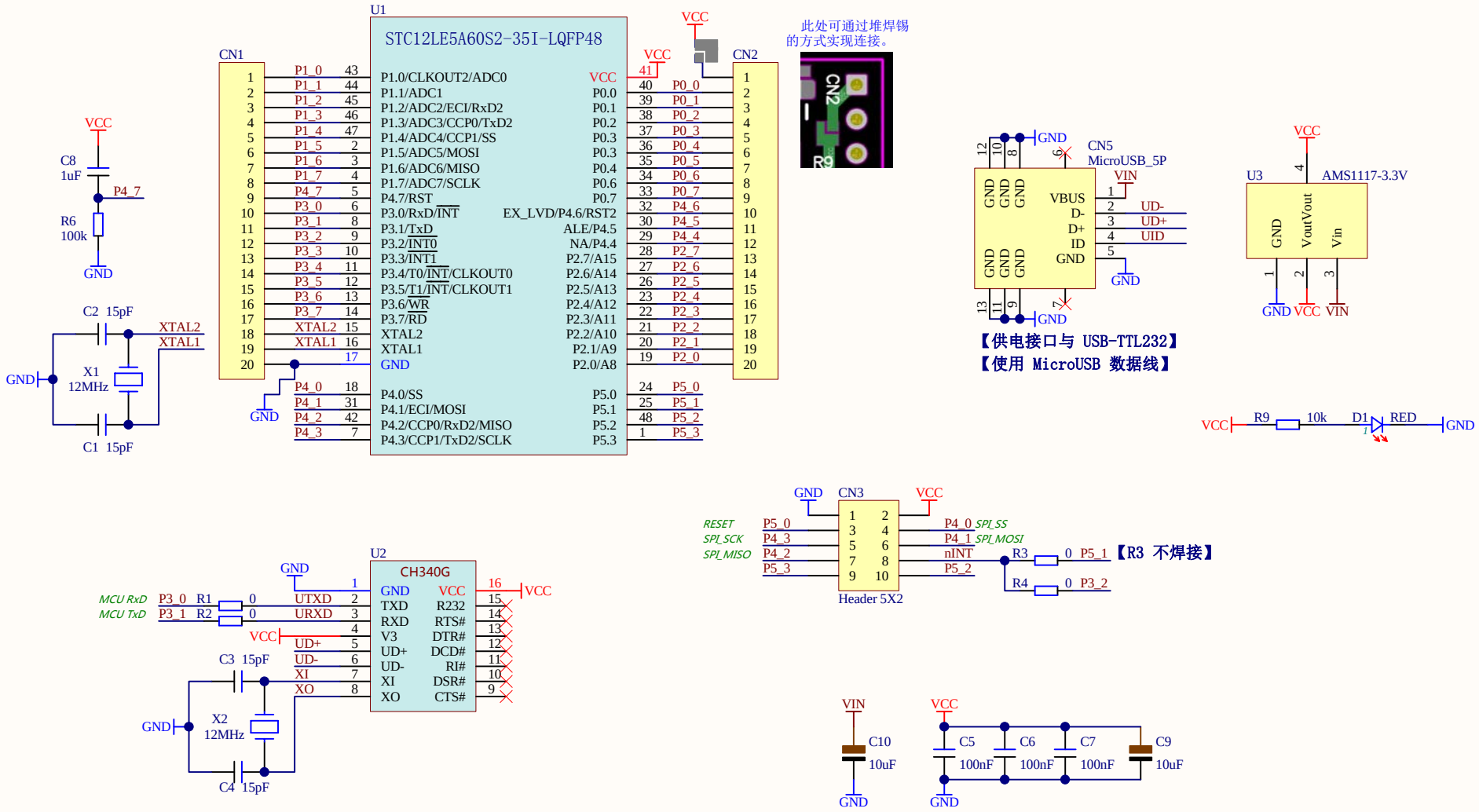

Title: **STC12LE5Axxxx 核心板**	Number:	岁月声响	Cortex Thumb ARM
Project: STC12LE5Axxxx-35I-LQFP48	Revision: 1.0	popctrl.taobao.com popctrl@163.com	
Date: 2015/3/11	Size: A4	Sheet 1 of 1	