Table of Content

Page 01	TITLE PAGE
Page 02	POWER, HDSC-DAP, JTAG,TRACE
Page 03	HC32F4A0
Page 04	PIN MUX, IO EXPANDER
Page 05	ETHERNET
Page 06	AUDIO
Page 07	SRAM, SDRAM, NAND,LCD
Page 08	QSPI FLASH, EEPROM,TF CARD
Page 09	USBFS, USBHS, USB3300
Page 10	CAN,LIN
Page 11	ADC, KEYS, LEDS,CAMERA
Page 12	USART,SPI,I2C,SMART CARD

Revision History

Rev	Date	Description
V01	02/14/2020	- New design.
V02	05/11/2020	- modify IO-expander assignment. - add leds and rocker switch. - add wake up key.
V03	06/16/2020	- modify SPST silkscreen. - add resistor bridge to VBUS detection. - add 33R resistor to NRST_4A0#.

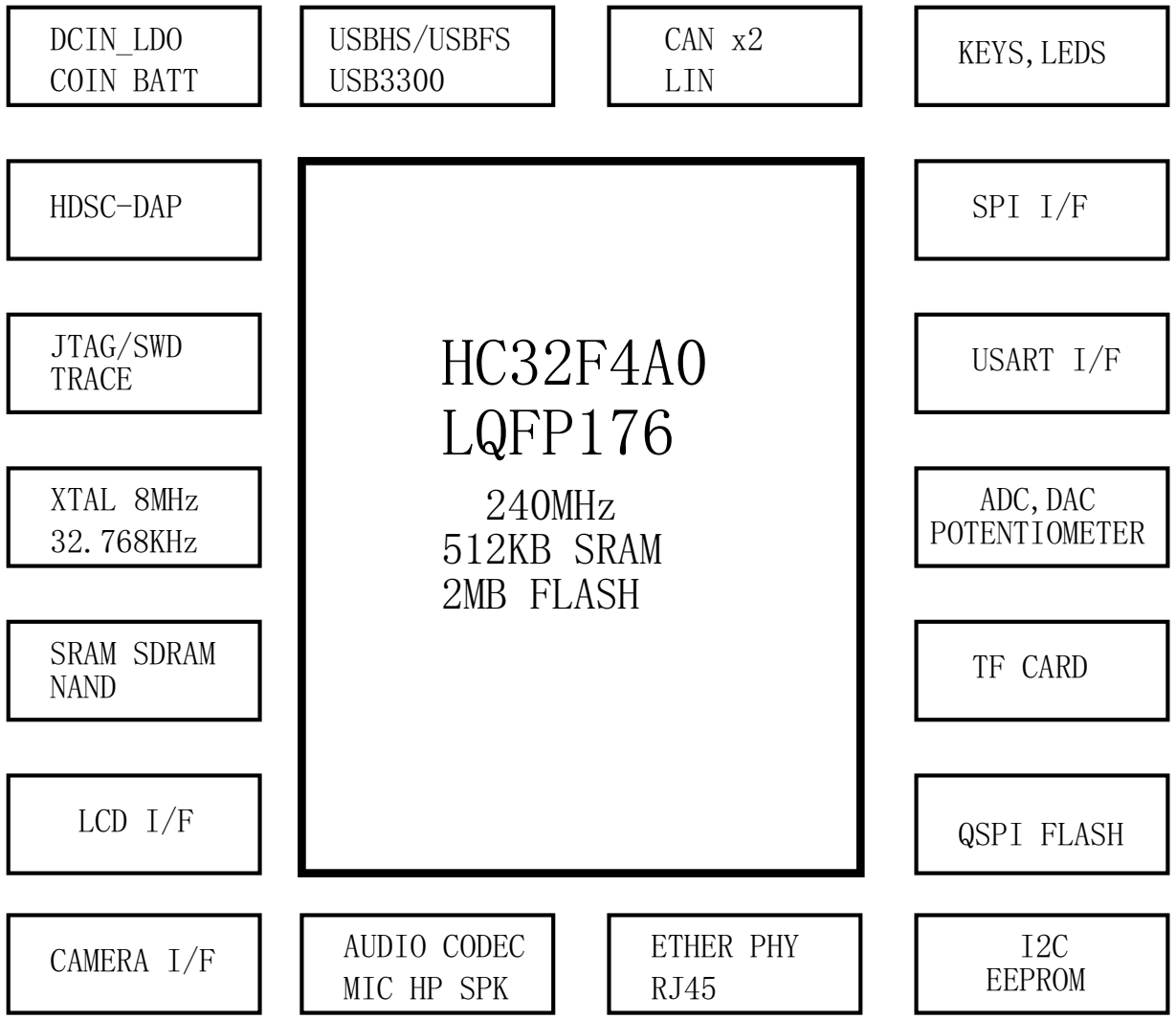

Huada Semiconductor Co., Ltd
MCU Business Unit
Chengdu

HDSC

HC32F4A0
TITLE PAGE

Size	Document Number	Modified By:	Rev
B	EV_F4A0_LQ176_V03.dsn	Devin Tang	V03
Date: Thursday, July 02, 2020		Sheet: 1 of 12	

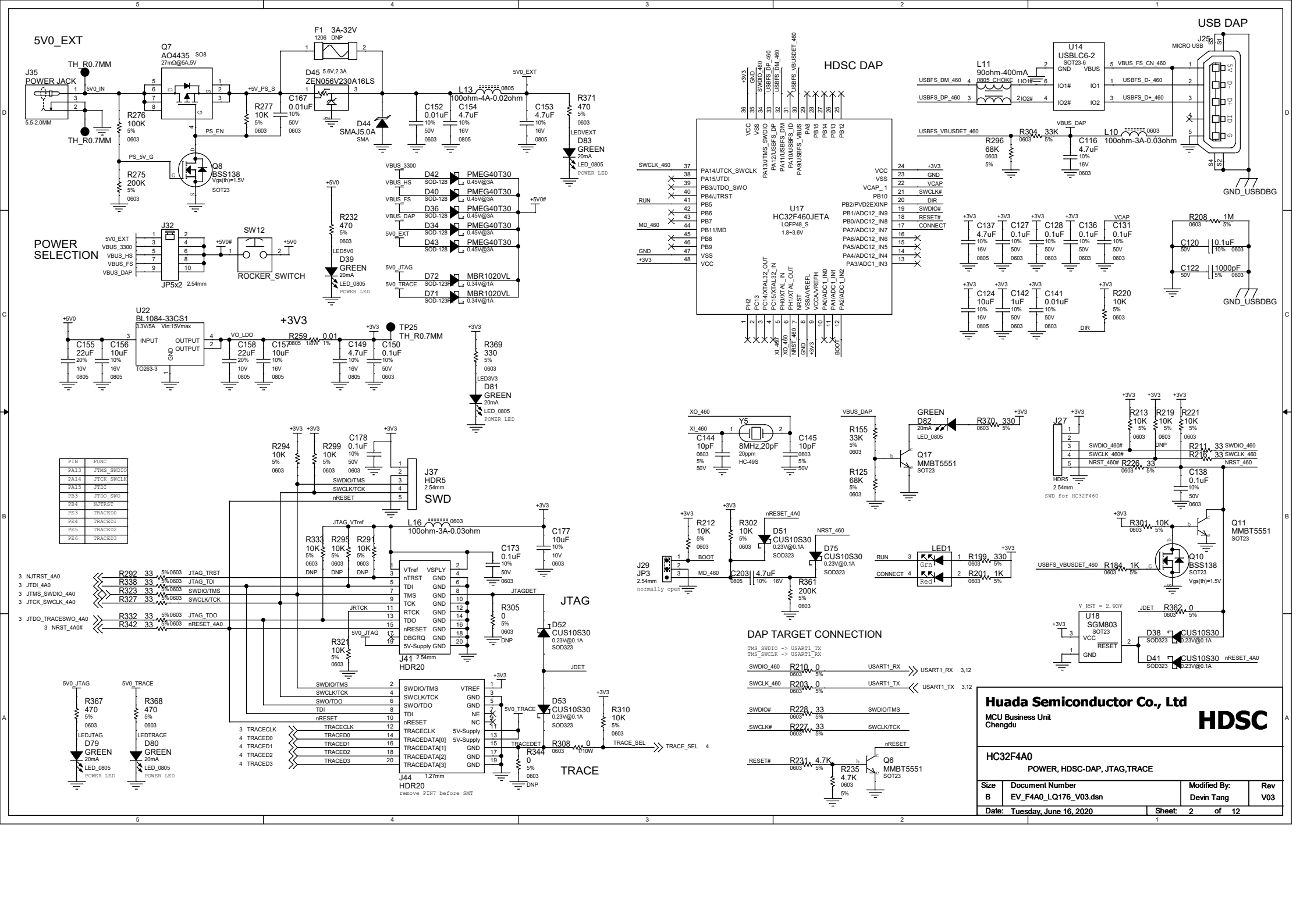
5V0_EXT
POWER SELECTION
HDSC DAP
USB DAP
+3V3
JTAG
TRACE
SWD
DAP TARGET CONNECTION
U17
HC32F460JETA
LQFP48_S
1.8~3.6V
Huada Semiconductor Co., Ltd
MCU Business Unit
Chengdu
HDSC
HC32F4A0
POWER, HDSC-DAP, JTAG,TRACE
Size
B
Document Number
EV_F4A0_LQ176_V03.dsn
Modified By:
Devin Tang
Rev
V03
Date: Tuesday, June 16, 2020
Sheet: 2 of 12

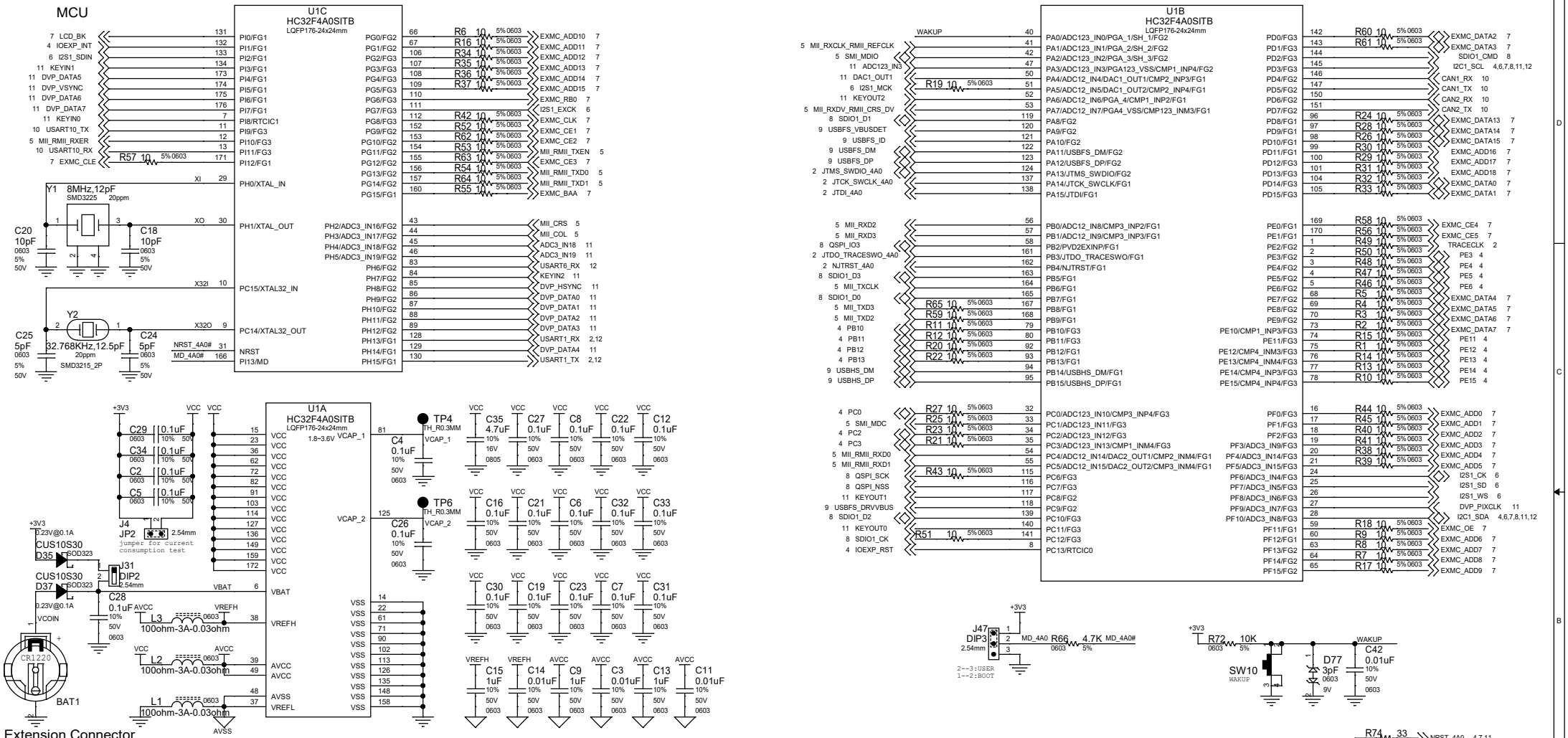
MCU
U1C
HC32F4A0SITB
LQFP176-24x24mm
U1B
HC32F4A0SITB
LQFP176-24x24mm
U1A
HC32F4A0SITB
LQFP176-24x24mm
1.8~3.6V
Y1 8MHz,12pF
SMD3225 20ppm
Y2
32.768KHz,12.5pF
20ppm
SMD3215_2P
JP2
jumper for current consumption test
BAT1
CR1220
Extension Connector
J3 HDR20x2
J1 HDR20x2
J2 HDR20x2
J5 HDR20x2
J47 DIP3
SW10 WAKUP
SW11 RESET
D77 3pF
D69 3pF
Huada Semiconductor Co., Ltd
MCU Business Unit
Chengdu
HDSC
HC32F4A0
HC32F4A0SITB
Size B
Document Number EV_F4A0_LQ176_V03.dsn
Modified By: Devin Tang
Rev V03
Date: Thursday, July 02, 2020
Sheet: 3 of 12

PIN MUX

SPDT
VIH > 2V, VIL < 0.8V
L ---> A=B1
H ---> A=B2(default)

U12 SN74CB3Q3257 TSSOP16 2.3~3.6V

3 PC2	PC2	USBHS_ULPI_DIR	USBHS_ULPI_DIR 9
3 PC0	PC0	USBHS_ULPI_STP	USBHS_ULPI_STP 9
3 PC3	PC3	USBHS_ULPI_NXT	USBHS_ULPI_NXT 9
3 PE11	PE11	USBHS_ULPI_D7	USBHS_ULPI_D7 9
		EXMC_CE0	EXMC_CE0 7
		EXMC_WE	EXMC_WE 7
		EXMC_ALE	EXMC_ALE 7
		EXMC_DATA8	EXMC_DATA8 7

USB3300_SEL; +3V3; C108 0.1uF 10% 50V 0603; R170 10K 5% 0603

U11 SN74CB3Q3257 TSSOP16 2.3~3.6V

3 PE14	PE14	USBHS_ULPI_D1	USBHS_ULPI_D1 9
3 PE13	PE13	USBHS_ULPI_D0	USBHS_ULPI_D0 9
3 PE15	PE15	USBHS_ULPI_D2	USBHS_ULPI_D2 9
3 PE12	PE12	USBHS_ULPI_CK	USBHS_ULPI_CK 9
		EXMC_DATA11	EXMC_DATA11 7
		EXMC_DATA10	EXMC_DATA10 7
		EXMC_DATA12	EXMC_DATA12 7
		EXMC_DATA9	EXMC_DATA9 7

USB3300_SEL; +3V3; C107 0.1uF 10% 50V 0603; R169 10K 5% 0603

PIN	DEFAULT	USB3300 DETECTED	USBHS DETECTED
PC0	EXMC_WE	USBHS_ULPI_STP	
PC2	EXMC_CE0	USBHS_ULPI_DIR	
PC3	EXMC_ALE	USBHS_ULPI_NXT	
PE11	EXMC_DATA8	USBHS_ULPI_D7	
PE12	EXMC_DATA9	USBHS_ULPI_CK	
PE13	EXMC_DATA10	USBHS_ULPI_D0	
PE14	EXMC_DATA11	USBHS_ULPI_D1	
PE15	EXMC_DATA12	USBHS_ULPI_D2	
PB10	QSPI_IO2	USBHS_ULPI_D3	
PB11	USBHS_DRVVBUS	USBHS_ULPI_D4	
PB12	QSPI_IO1	USBHS_ULPI_D5	USBHS_ID
PB13	QSPI_IO0	USBHS_ULPI_D6	USBHS_VBUS

U16 SN74CB3Q3257 TSSOP16 2.3~3.6V

3 PB10	PB10	USBHS_ULPI_D3	USBHS_ULPI_D3 9
3 PB12	PB12	USBHS_ID/D5	
3 PB13	PB13	USBHS_VBUS/D6	
		QSPI_IO2	QSPI_IO2 8
		QSPI_IO1	QSPI_IO1 8
		QSPI_IO0	QSPI_IO0 8

USB_SEL; +3V3; C125 0.1uF 10% 50V 0603; R217 10K 5% 0603

U15 SN74CB3Q3257 TSSOP16 2.3~3.6V

3 PB11	PB11	USBHS_ULPI_D4	USBHS_ULPI_D4 9
	USBHS_ID/D5	USBHS_ULPI_D5	USBHS_ULPI_D5 9
	USBHS_VBUS/D6	USBHS_ULPI_D6	USBHS_ULPI_D6 9
		USBHS_DRVVBUS	USBHS_DRVVBUS 9
		USBHS_ID	USBHS_ID 9
		USBHS_VBUSDET	

USB3300_SEL; +3V3; C126 0.1uF 10% 50V 0603; R218 10K 5% 0603

USB3300 > USBHS

PIN	DEFAULT	TRACE DETECTED
PE3(FG2)	USART6_CK	TRACED0
PE4(FG2)	USART6_CTS	TRACED1
PE5(FG2)	USART6_RTS	TRACED2
PE6(FG2)	USART6_TX	TRACED3

U26 SN74CB3Q3257 TSSOP16 2.3~3.6V

3 PE3	PE3	TRACED0	TRACED0 2
3 PE4	PE4	TRACED1	TRACED1 2
3 PE5	PE5	TRACED2	TRACED2 2
3 PE6	PE6	TRACED3	TRACED3 2
		USART6_CK	USART6_CK 7,12
		USART6_CTS	USART6_CTS 7,12
		USART6_RTS	USART6_RTS 7,12
		USART6_TX	USART6_TX 12

2 TRACE_SEL; +3V3; C193 0.1uF 10% 50V 0603; R341 10K 5% 0603

USB3300_SEL — J24 JUMP2 2.54mm DNP
USB_SEL — J23 JUMP2 2.54mm DNP
TRACE_SEL — J40 JUMP2 2.54mm DNP

+3V3; R186 10K 5% 0603; USB_SEL

R200 10K 5% 0603; D32 CUS10S30 0.23V@0.1A SOD323; D28 CUS10S30 0.23V@0.1A SOD323; R194 10K 5% 0603

VBUS_HS; R198 33K 5% 0603; R197 68K 0603 5%; USBHS_VBUSDET; R71 1K 0603 5%

Q5 BSS138 SOT23 Vgs(th)=1.5V; D31 CUS10S30 0.23V@0.1A SOD323; D29 CUS10S30 0.23V@0.1A SOD323; Q4 BSS138 SOT23 Vgs(th)=1.5V

USBHS_SEL; USB3300_SEL; VBUS_3300; R193 33K 5% 0603; R192 68K 0603 5%

USBHS_ID; USB3300_ID; USB3300_ID 9

IO-EXPANDER

PIN	FUNC
PD3	I2C1_SCL
PF10	I2C1_SDA
PI1	IOEXP_INT
PC13	IOEXP_RST

+3V3; R339 5.1K 5% 0603; R328 5.1K 5% 0603; R325 5.1K 5% 0603; R340 5.1K 5% 0603

3,6,7,8,11,12 I2C1_SCL — I2C1_SCL — R336 33 5% 0603 — IOEXP_SCL 22
3,6,7,8,11,12 I2C1_SDA — I2C1_SDA — R331 33 5% 0603 — IOEXP_SDA 23
3 IOEXP_INT — IOEXP_INT — R324 33 5% 0603 — IOEXP_INT# 1
3 IOEXP_RST — IOEXP_RST — R335 33 5% 0603 — IOEXP_RST# 3

3,7,11 NRST_4A0 — NRST_4A0 — D76 SOD323 — CUS10S30 0.23V@0.1A

C189 0.1uF 10% 50V 0603

U25 TCA9539 TSSOP24 1.65~3.6V

		USBFS_OC	USBFS_OC 9
		USBHS_OC	USBHS_OC 9
		SDIO1_CD	SDIO1_CD 8
		SMARTCARD_CD	SMARTCARD_CD 12
		TOUCH_INT	TOUCH_INT 7
		LIN_SLEEP	LIN_SLEEP 10
		RT_CS/CT_RST	RT_CS/CT_RST 7
		LCD_RST	LCD_RST 7
		CAM_RST	CAM_RST 11
		CAM_STB	CAM_STB 11
		USB3300_RST	USB3300_RST 9
		ETH_RST	ETH_RST 5
		CAN_STB	CAN_STB 10
		LED0	LED0 11
		LED1	LED1 11
		LED2	LED2 11

I2C ADDRESS:1110 100

Huada Semiconductor Co., Ltd
MCU Business Unit
Chengdu

HDSC

HC32F4A0
PIN MUX, IO EXPANDER

Size	Document Number	Modified By:	Rev
B	EV_F4A0_LQ176_V03.dsn	Devin Tang	V03
Date: Tuesday, June 16, 2020		Sheet: 4 of 12	

ETHERNET PHY

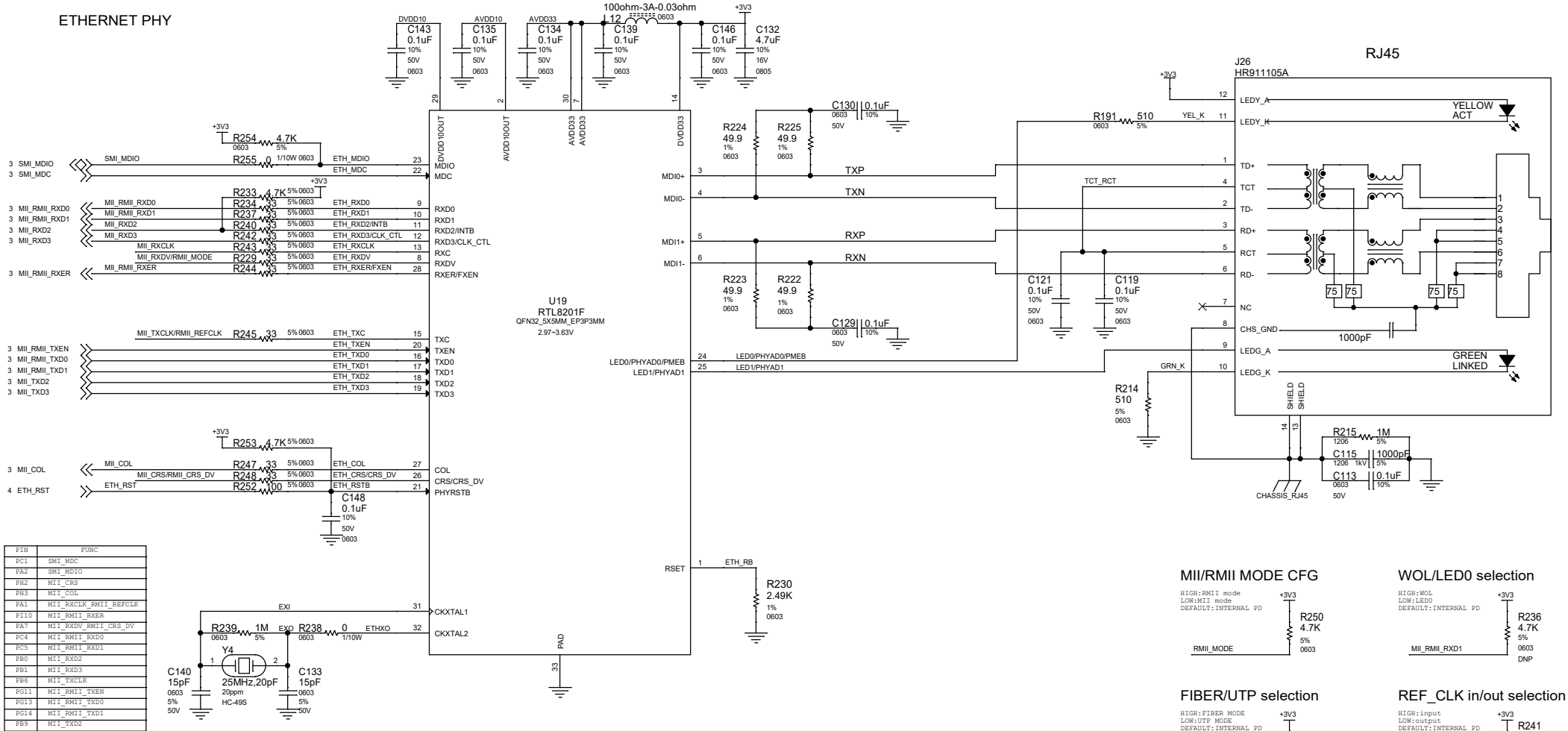

PIN	FUNC
PC1	SMI_MDC
PA2	SMI_MDIO
PH2	MII_CRS
PH3	MII_COL
PA1	MII_RXCLK_RMII_REFCLK
PI10	MII_RMII_RXER
PA7	MII_RXDV_RMII_CRS_DV
PC4	MII_RMII_RXD0
PC5	MII_RMII_RXD1
PB0	MII_RXD2
PB1	MII_RXD3
PB6	MII_TXCLK
PG11	MII_RMII_TXEN
PG13	MII_RMII_TXD0
PG14	MII_RMII_TXD1
PB9	MII_TXD2
PB8	MII_TXD3

MII/RMII SELECTION

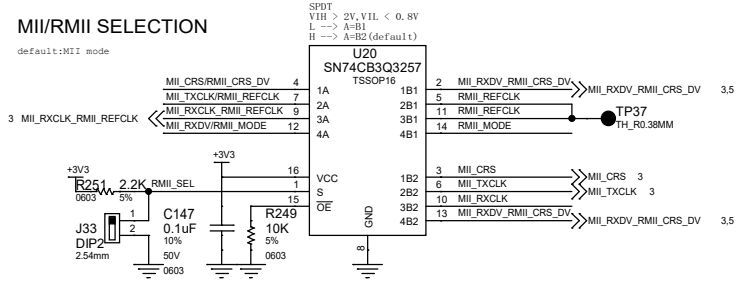

PHY ADDRESS CFG

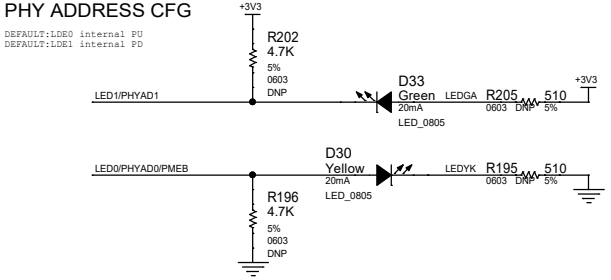

MII/RMII MODE CFG

WOL/LED0 selection

FIBER/UTP selection

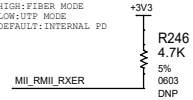

REF_CLK in/out selection

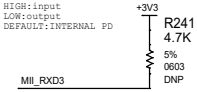

Huada Semiconductor Co., Ltd
MCU Business Unit
Chengdu

HDSC

HC32F4A0
ETHERNET

Size	Document Number	Modified By:	Rev
B	EV_F4A0_LQ176_V03.dsn	Devin Tang	V03
Date: Tuesday, June 16, 2020		Sheet: 5 of 12	

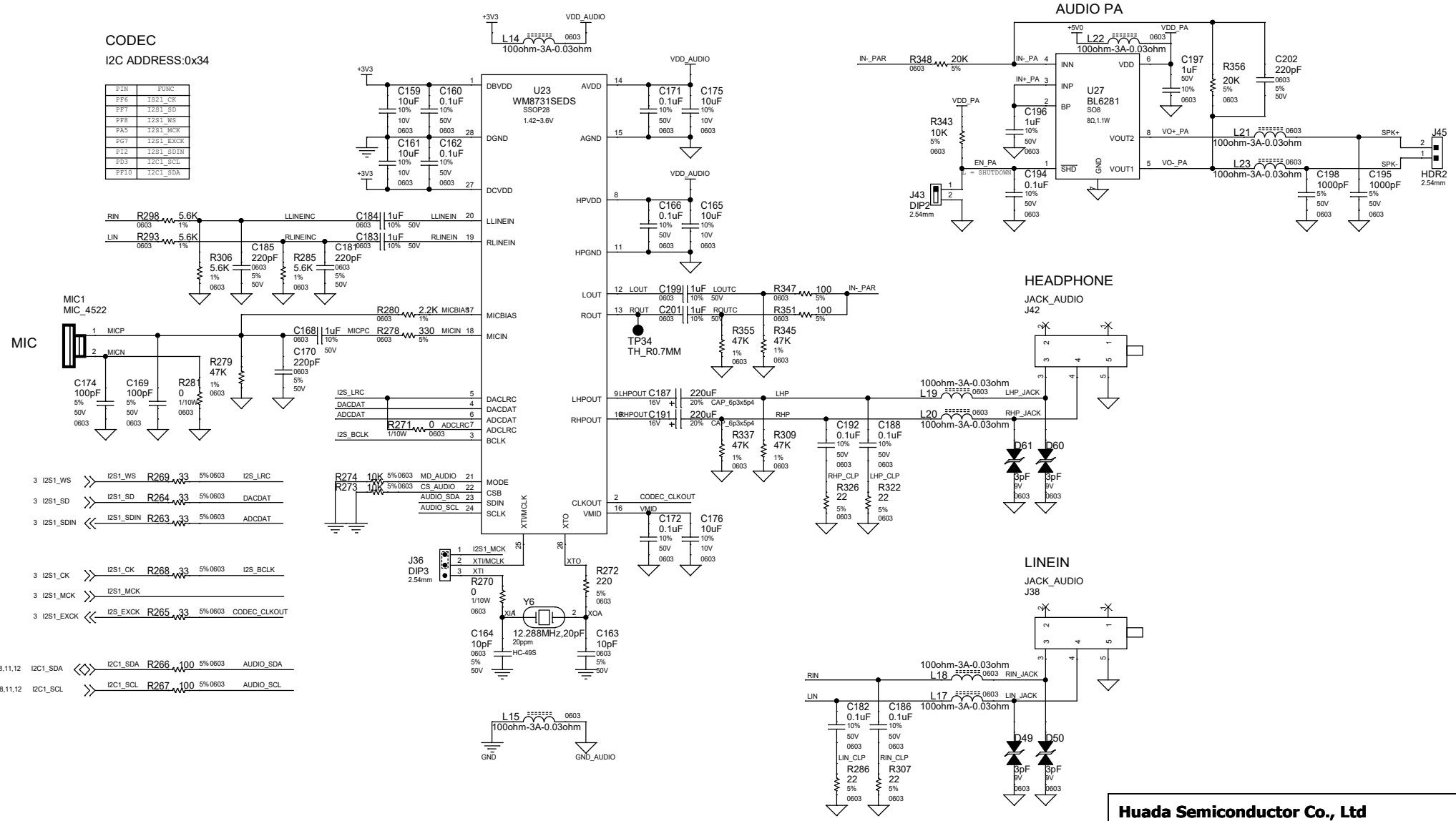

Huada Semiconductor Co., Ltd
MCU Business Unit
Chengdu

HDSC

HC32F4A0
AUDIO

Size	Document Number	Modified By:	Rev
B	EV_F4A0_LQ176_V03.dsn	Devin Tang	V03

Date: Tuesday, June 16, 2020 Sheet: 6 of 12

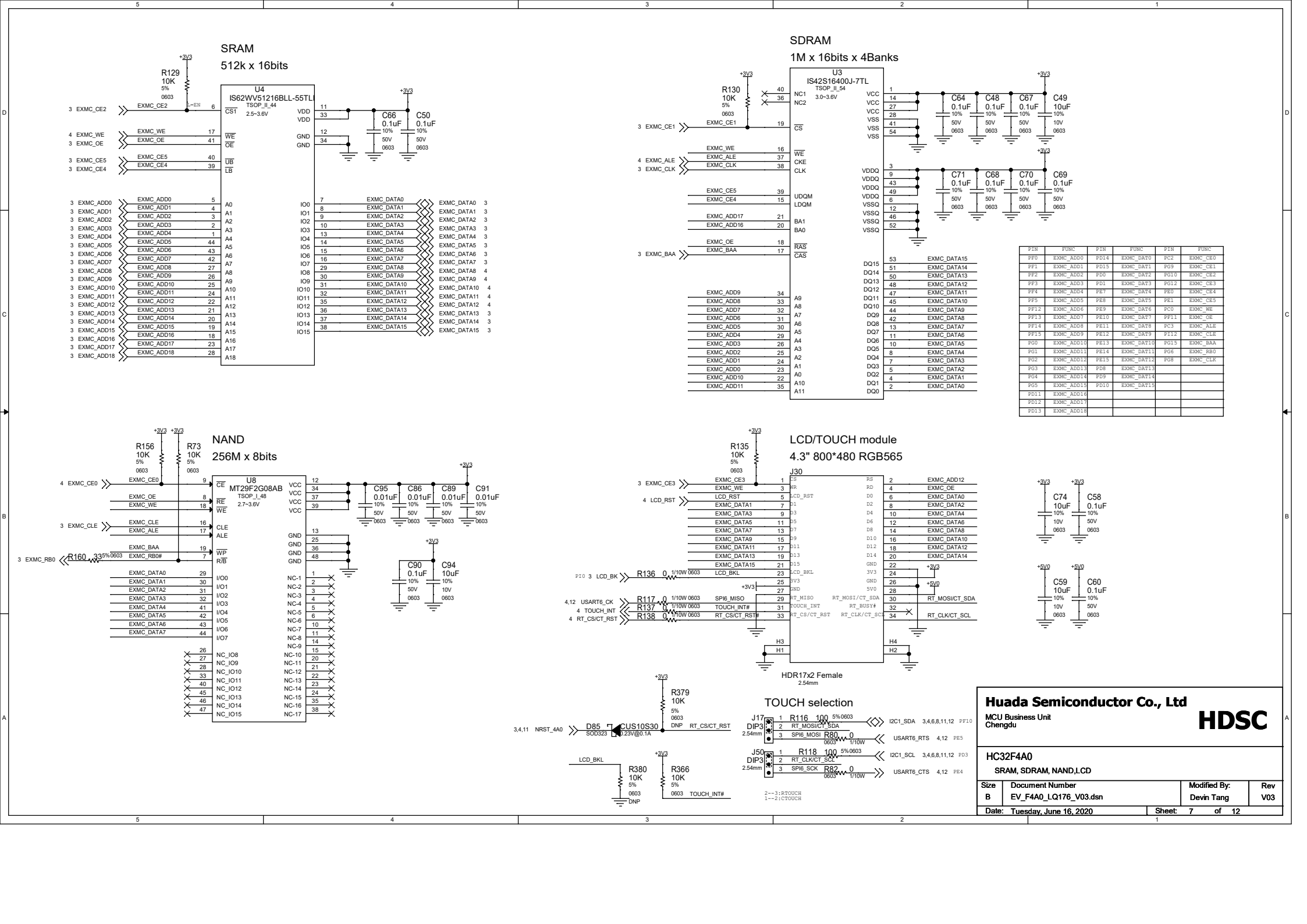

PIN	FUNC	PIN	FUNC	PIN	FUNC
PF0	EXMC_ADD0	PD14	EXMC_DAT0	PC2	EXMC_CE0
PF1	EXMC_ADD1	PD15	EXMC_DAT1	PG9	EXMC_CE1
PF2	EXMC_ADD2	PD0	EXMC_DAT2	PG10	EXMC_CE2
PF3	EXMC_ADD3	PD1	EXMC_DAT3	PG12	EXMC_CE3
PF4	EXMC_ADD4	PE7	EXMC_DAT4	PE0	EXMC_CE4
PF5	EXMC_ADD5	PE8	EXMC_DAT5	PE1	EXMC_CE5
PF12	EXMC_ADD6	PE9	EXMC_DAT6	PC0	EXMC_WE
PF13	EXMC_ADD7	PE10	EXMC_DAT7	PF11	EXMC_OE
PF14	EXMC_ADD8	PE11	EXMC_DAT8	PC3	EXMC_ALE
PF15	EXMC_ADD9	PE12	EXMC_DAT9	PI12	EXMC_CLE
PG0	EXMC_ADD10	PE13	EXMC_DAT10	PG15	EXMC_BAA
PG1	EXMC_ADD11	PE14	EXMC_DAT11	PG6	EXMC_RB0
PG2	EXMC_ADD12	PE15	EXMC_DAT12	PG8	EXMC_CLK
PG3	EXMC_ADD13	PD8	EXMC_DAT13		
PG4	EXMC_ADD14	PD9	EXMC_DAT14		
PG5	EXMC_ADD15	PD10	EXMC_DAT15		
PD11	EXMC_ADD16				
PD12	EXMC_ADD17				
PD13	EXMC_ADD18				

Huada Semiconductor Co., Ltd
MCU Business Unit
Chengdu

HDSC

HC32F4A0

SRAM, SDRAM, NAND,LCD

Size	Document Number	Modified By:	Rev
B	EV_F4A0_LQ176_V03.dsn	Devin Tang	V03

Date: Tuesday, June 16, 2020 Sheet: 7 of 12

QSPI FLASH

PIN	FUNC
PB13	QSPI_IO0
PB12	QSPI_IO1
PB10	QSPI_IO2
PB2	QSPI_IO3
PC6	QSPI_SCK
PC7	QSPI_NSS

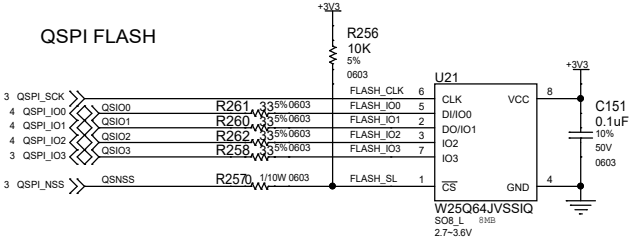

EEPROM

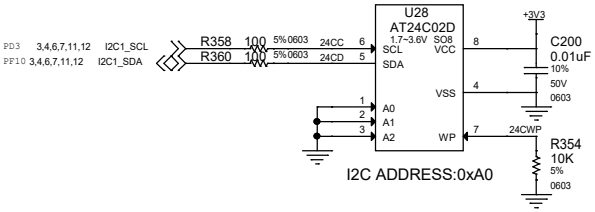

TF CARD

PIN	FUNC
PB7	SDIO1_D0
PA8	SDIO1_D1
PC10	SDIO1_D2
PB5	SDIO1_D3
PD2	SDIO1_CMD
PC12	SDIO1_CK

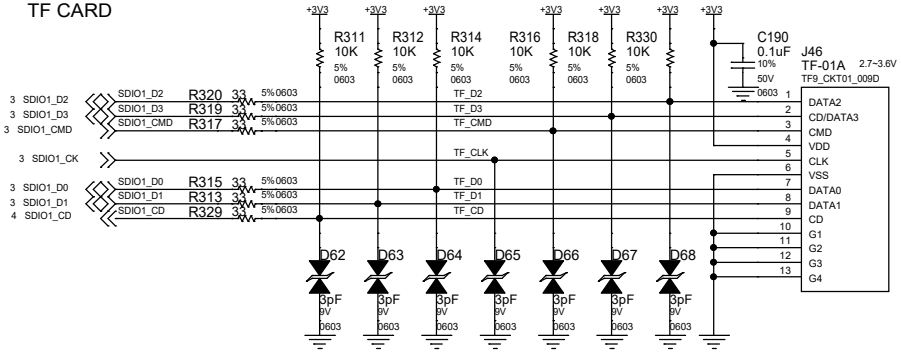

Huada Semiconductor Co., Ltd
MCU Business Unit
Chengdu

HDSC

HC32F4A0
QSPI FLASH, EEPROM, TF CARD

Size	Document Number	Modified By:	Rev
B	EV_F4A0_LQ176_V03.dsn	Devin Tang	V03
Date: Tuesday, June 16, 2020		Sheet: 8 of 12	

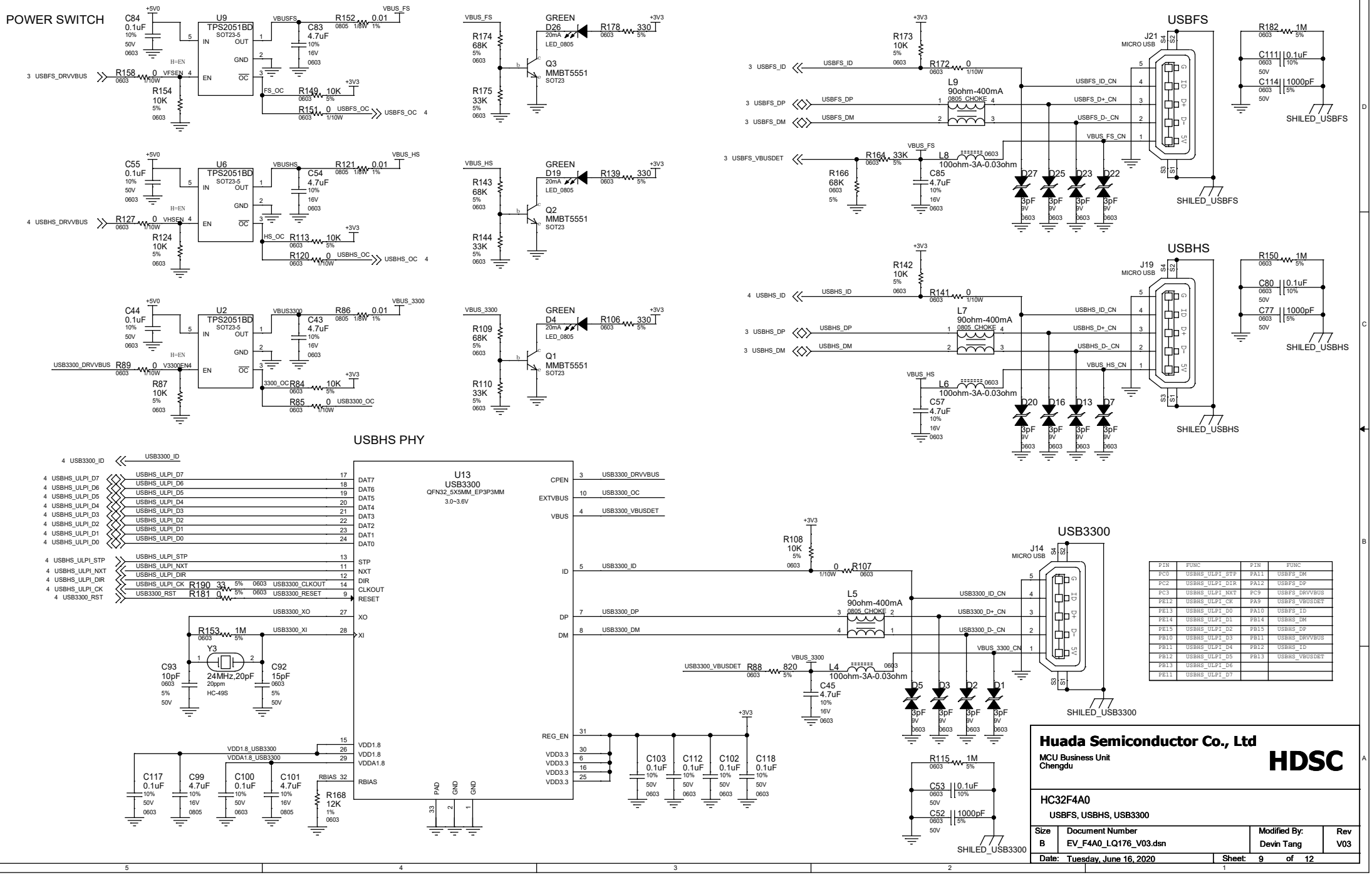
POWER SWITCH
U9
TPS2051BD
SOT23-5
VBUSFS
VBUS_FS
R152 0.01
C83 4.7uF
R158 0
R154 10K
R149 10K
R151 0
USBFS_DRVVBUS
USBFS_OC
U6
TPS2051BD
SOT23-5
VBUSHS
VBUS_HS
R121 0.01
C54 4.7uF
R127 0
R124 10K
R113 10K
R120 0
USBHS_DRVVBUS
USBHS_OC
U2
TPS2051BD
SOT23-5
VBUS3300
VBUS_3300
R86 0.01
C43 4.7uF
R89 0
R87 10K
R84 10K
R85 0
USB3300_DRVVBUS
USB3300_OC
GREEN
D26
LED_0805
R178 330
Q3
MMBT5551
SOT23
R174 68K
R175 33K
GREEN
D19
R139 330
Q2
MMBT5551
R143 68K
R144 33K
GREEN
D4
R106 330
Q1
MMBT5551
R109 68K
R110 33K
USBFS
J21
MICRO USB
R173 10K
R172 0
L9
90ohm-400mA
0805_CHOKE
R164 33K
L8
100ohm-3A-0.03ohm
C85 4.7uF
R166 68K
D27
D25
D23
D22
R182 1M
C111 0.1uF
C114 1000pF
SHILED_USBFS
USBHS
J19
MICRO USB
R142 10K
R141 0
L7
90ohm-400mA
0805_CHOKE
L6
100ohm-3A-0.03ohm
C57 4.7uF
D20
D16
D13
D7
R150 1M
C80 0.1uF
C77 1000pF
SHILED_USBHS
USBHS PHY
U13
USB3300
QFN32_5X5MM_EP3P3MM
3.0~3.6V
R153 1M
Y3
24MHz,20pF
20ppm
HC-49S
C93 10pF
C92 15pF
R190 33
R181 0
C117 0.1uF
C99 4.7uF
C100 0.1uF
C101 4.7uF
R168 12K
C103 0.1uF
C112 0.1uF
C102 0.1uF
C118 0.1uF
USB3300
J14
MICRO USB
R108 10K
R107 0
L5
90ohm-400mA
0805_CHOKE
R88 820
L4
100ohm-3A-0.03ohm
C45 4.7uF
D5
D3
D2
D1
R115 1M
C53 0.1uF
C52 1000pF
SHILED_USB3300
PIN FUNC PIN FUNC
PC0 USBHS_ULPI_STP PA11 USBFS_DM
PC2 USBHS_ULPI_DIR PA12 USBFS_DP
PC3 USBHS_ULPI_NXT PC9 USBFS_DRVVBUS
PE12 USBHS_ULPI_CK PA9 USBFS_VBUSDET
PE13 USBHS_ULPI_D0 PA10 USBFS_ID
PE14 USBHS_ULPI_D1 PB14 USBHS_DM
PE15 USBHS_ULPI_D2 PB15 USBHS_DP
PB10 USBHS_ULPI_D3 PB11 USBHS_DRVVBUS
PB11 USBHS_ULPI_D4 PB12 USBHS_ID
PB12 USBHS_ULPI_D5 PB13 USBHS_VBUSDET
PB13 USBHS_ULPI_D6
PE11 USBHS_ULPI_D7
Huada Semiconductor Co., Ltd
MCU Business Unit
Chengdu
HDSC
HC32F4A0
USBFS, USBHS, USB3300
Size B
Document Number EV_F4A0_LQ176_V03.dsn
Modified By: Devin Tang
Rev V03
Date: Tuesday, June 16, 2020
Sheet: 9 of 12

CAN2.0B

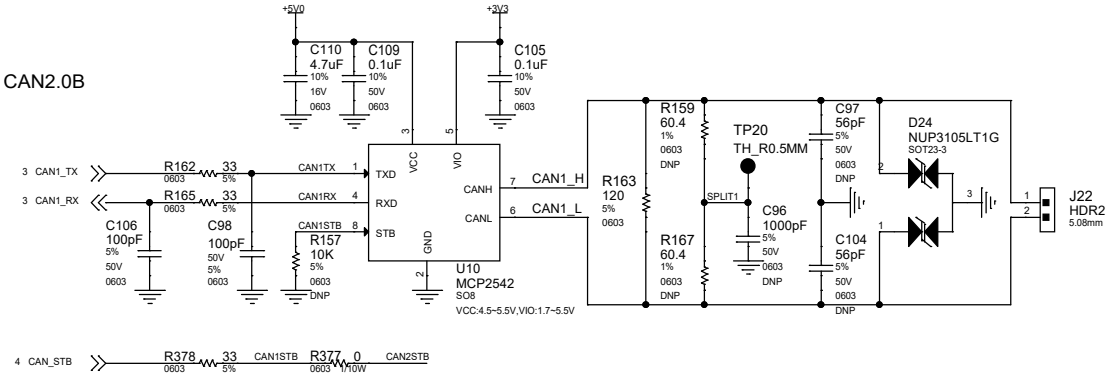

CAN FD

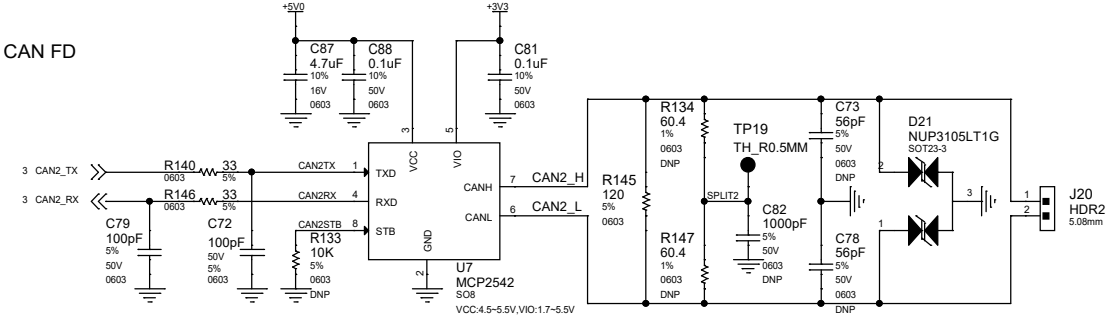

PIN	FUNC
PD4	CAN1_RX
PD5	CAN1_TX
PD6	CAN2_RX
PD7	CAN2_TX
PI9	USART10_RX
PI11	USART10_TX

LIN

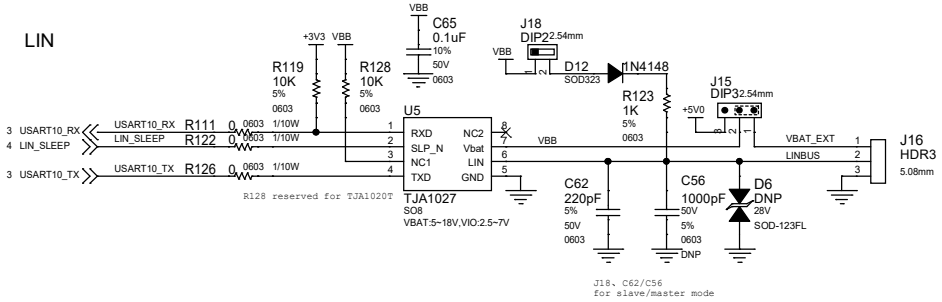

Huada Semiconductor Co., Ltd
MCU Business Unit
Chengdu

HDSC

HC32F4A0
CAN,LIN

Size	Document Number	Modified By:	Rev
B	EV_F4A0_LQ176_V03.dsn	Devin Tang	V03
Date: Tuesday, June 16, 2020		Sheet: 10 of 12	

ADC,DAC

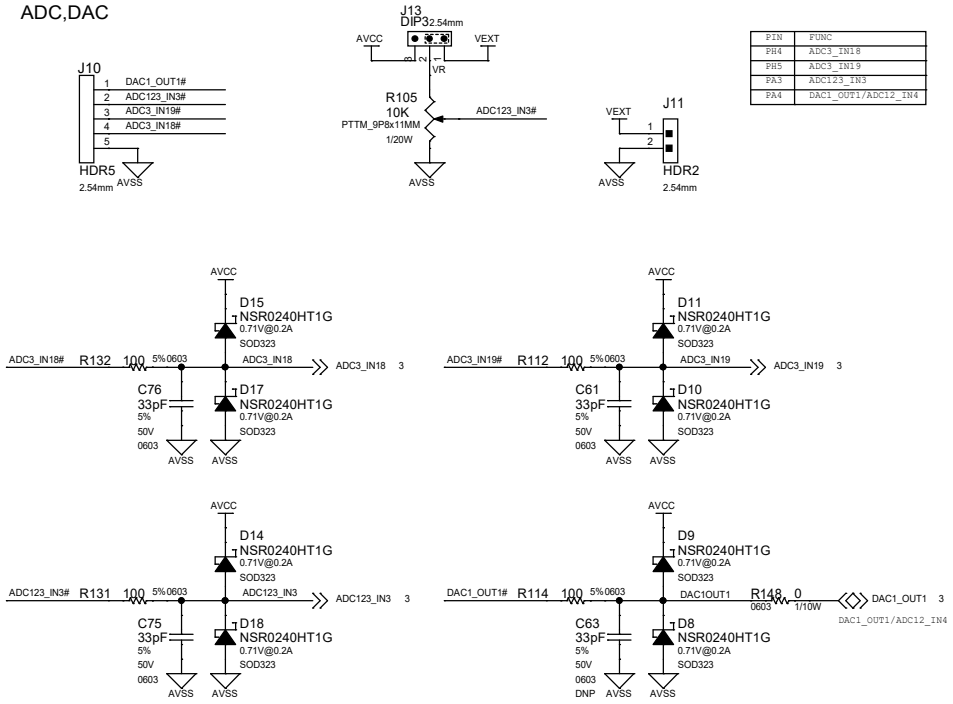

PIN	FUNC
PH4	ADC3_IN18
PH5	ADC3_IN19
PA3	ADC123_IN3
PA4	DAC1_OUT1/ADC12_IN4

MATRIX KEYBOARD

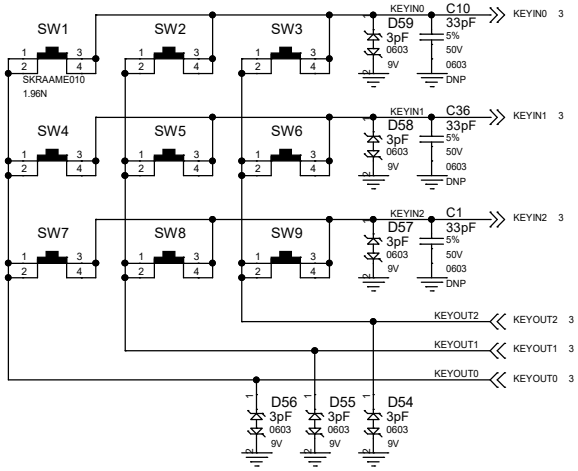

PIN	FUNC
PI8	KEYIN0
PI3	KEYIN1
PH7	KEYIN2
PC11	KEYOUT0
PC8	KEYOUT1
PA6	KEYOUT2

LEDS

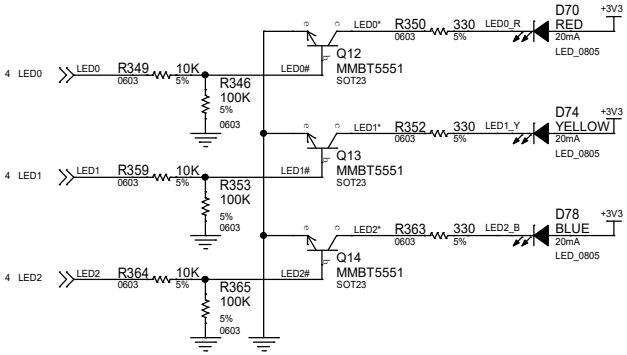

CAMERA

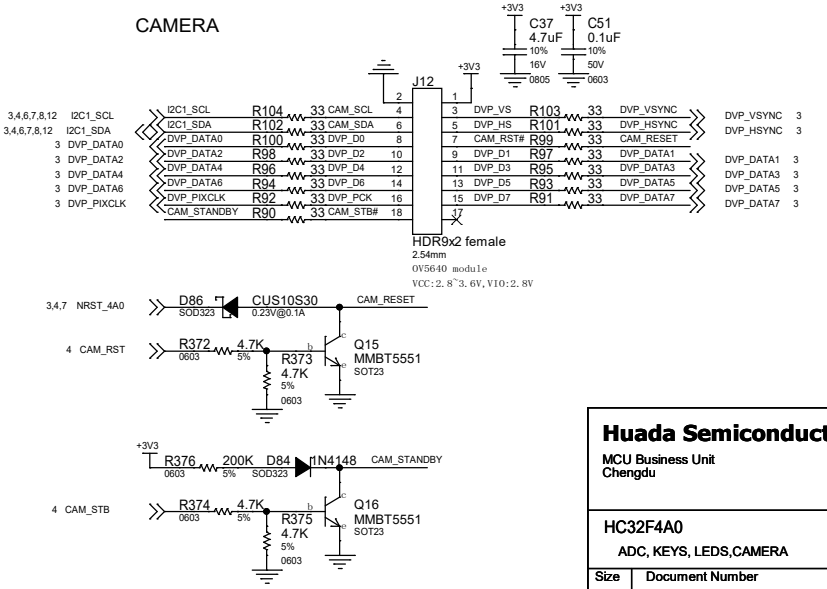

PIN	FUNC
PF9	DVP_PIXCLK
PI5	DVP_VSYNC
PH8	DVP_HSYNC
PH9	DVP_DATA0
PH10	DVP_DATA1
PH11	DVP_DATA2
PH12	DVP_DATA3
PH14	DVP_DATA4
PI4	DVP_DATA5
PI6	DVP_DATA6
PI7	DVP_DATA7
PD3	I2C1_SCL
PF10	I2C1_SDA

Huada Semiconductor Co., Ltd
MCU Business Unit
Chengdu

HDSC

HC32F4A0
ADC, KEYS, LEDS,CAMERA

Size	Document Number	Modified By:	Rev
B	EV_F4A0_LQ176_V03.dsn	Devin Tang	V03

Date: Tuesday, June 16, 2020 Sheet: 11 of 12

USART/SPI

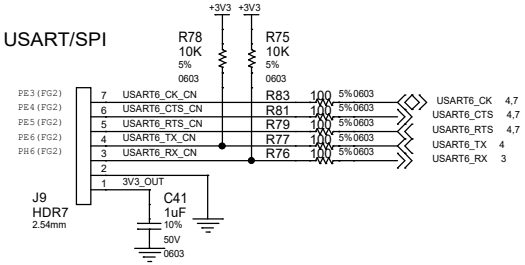

PIN	USART6	SMART CARD	SPI6	TRACE
PE3(FG2)	CK	CLK	SCK	TRACED0
PE4(FG2)	CTS	RESET	MOSI	TRACED1
PE5(FG2)	RTS	PWR_EN	MISO	TRACED2
PE6(FG2)	TX	TX	NSS0	TRACED3
PH6(FG2)	RX	RX		

SMART CARD

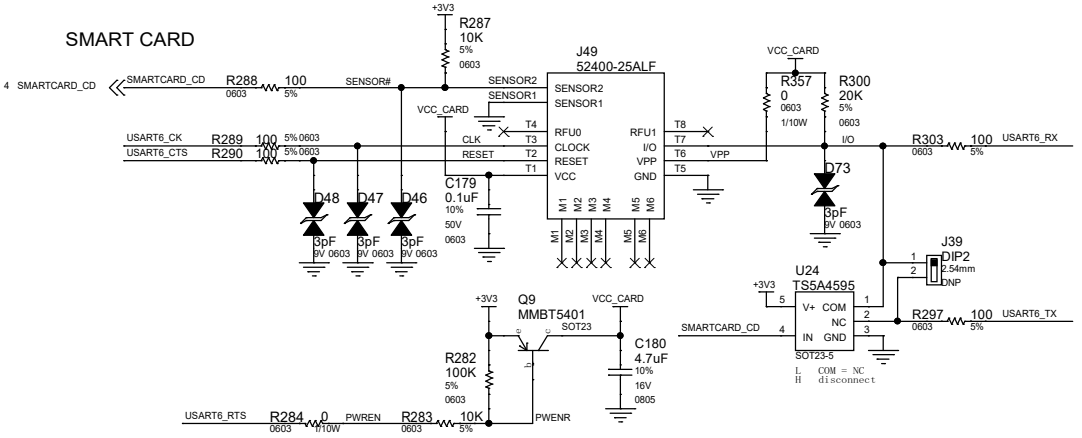

I2C1

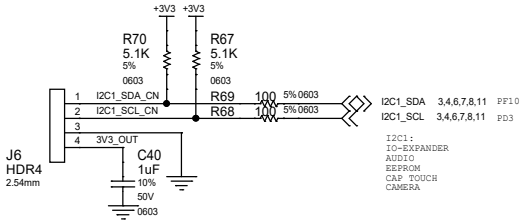

3V3/5V0 OUT

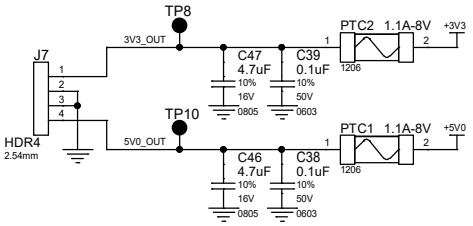

USART1

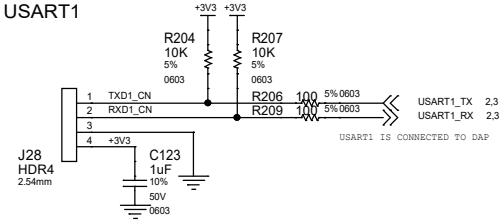

TP/FID/FAB HOLES

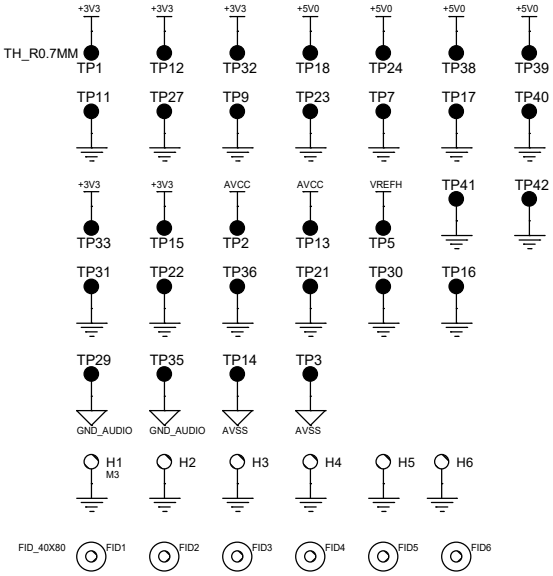

Huada Semiconductor Co., Ltd
MCU Business Unit
Chengdu

HDSC

HC32F4A0
USART,SPI,I2C,SMART CARD

Size	Document Number	Modified By:	Rev
B	EV_F4A0_LQ176_V03.dsn	Devin Tang	V03
Date: Tuesday, June 16, 2020		Sheet: 12 of 12	