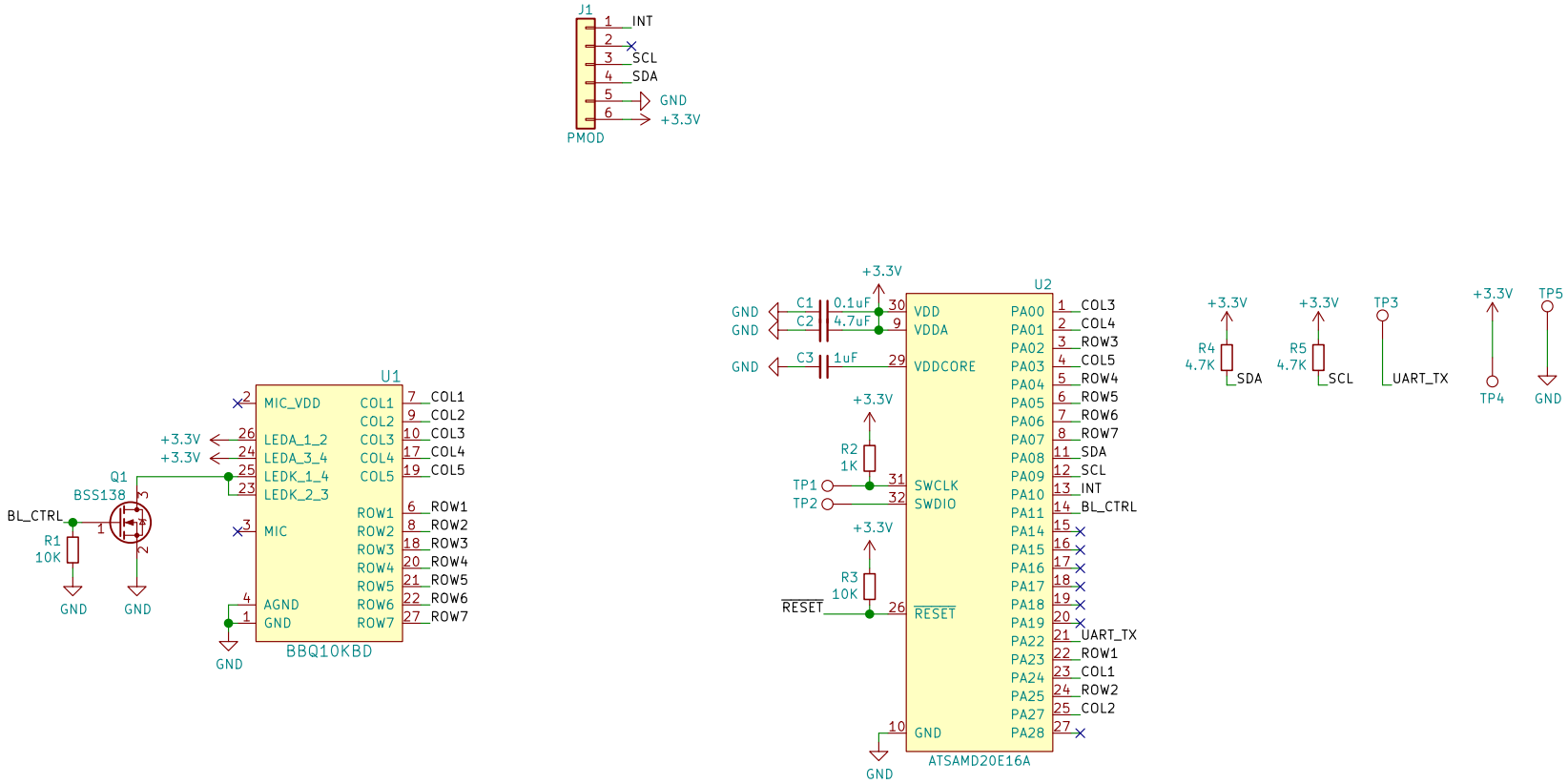

Sheet: /
File: bbq10_keyboard.sch

Title:

Size: A4	Date:	Rev:
KiCad E.D.A. kicad (6.0.0-rc1-dev-1009-g96e65c7f2)		Id: 1/1