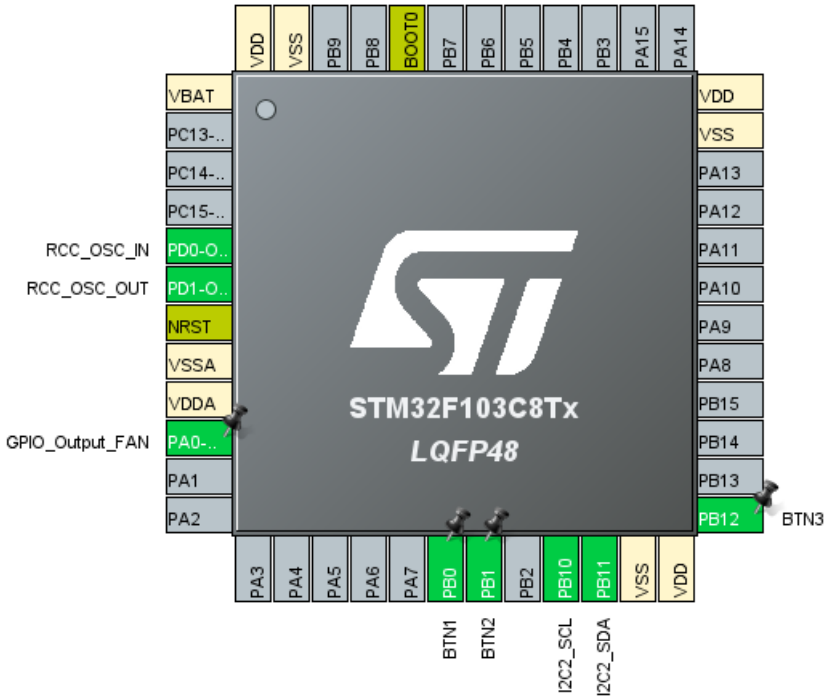

GPIO | I2C | RCC

Search Signals

Search (Ctrl+F)

☐ Show only Modified Pins

Pin Name	Signal on Pin	GPIO output ...	GPIO mode	GPIO Pull-up/...	Maximu...	User Label	Modified
PA0-WKUP	n/a	Low	Output Push Pull	No pull-up and...	Low	GPIO_Out...	☑
PB0	n/a	n/a	Input mode	Pull-up	n/a	BTN1	☑
PB1	n/a	n/a	Input mode	Pull-up	n/a	BTN2	☑
PB12	n/a	n/a	Input mode	Pull-up	n/a	BTN3	☑

GPIO | I2C | RCC

Search Signals

Search (Ctrl+F)

☐ Show only Modified Pins

Pin Name	Signal on Pin	GPIO output ...	GPIO mode	GPIO Pull-up...	Maximum ou...	User Label	Modified
PB10	I2C2_SCL	n/a	Alternate Fu...	n/a	High		☐
PB11	I2C2_SDA	n/a	Alternate Fu...	n/a	High		☐

GPIO | I2C | RCC

Search Signals

Search (Ctrl+F)

☐ Show only Modified Pins

Pin Name	Signal on Pin	GPIO output ...	GPIO mode	GPIO Pull-up...	Maximum ou...	User Label	Modified
PD0-OSC_IN	RCC_OSC_IN	n/a	n/a	n/a	n/a		☐
PD1-OSC_O...	RCC_OSC_...	n/a	n/a	n/a	n/a		☐

NVIC Mode and Configuration

Configuration

NVIC | Code generation

Priority Group: 4 bits for pre-e... | ☐ Sort by Premption Priority and Sub Priority | ☐ Sort by interrupts names

Search: Search... | Show: available interrupts | ☑ Force DMA channels Interrupts

NVIC Interrupt Table	Enabled	Preemption Priority	Sub Priority
Non maskable interrupt	☑	0	0
Hard fault interrupt	☑	0	0
Memory management fault	☑	0	0
Prefetch fault, memory access fault	☑	0	0
Undefined instruction or illegal state	☑	0	0
System service call via SWI instruction	☑	0	0
Debug monitor	☑	0	0
Pendable request for system service	☑	0	0
Time base: System tick timer	☑	15	0
PVD interrupt through EXTI line 16	☐	0	0
Flash global interrupt	☐	0	0
RCC global interrupt	☐	0	0
TIM3 global interrupt	☑	0	0
I2C2 event interrupt	☑	0	0
I2C2 error interrupt	☑	0	0

RCC Mode and Configuration

Mode

High Speed Clock (HSE): Crystal/Ceramic Resonator

Low Speed Clock (LSE): Disable

☐ Master Clock Output

Configuration

Reset Configuration

Parameter Settings | User Constants | NVIC Settings | GPIO Settings

Configure the below parameters :

Search (Ctrl+F)

System Parameters

VDD voltage (V)	3.3 V
Prefetch Buffer	Enabled
Flash Latency(WS)	2 WS (3 CPU cycle)

RCC Parameters

HSI Calibration Value	16
HSE Startup Timout Value (ms)	100
LSE Startup Timout Value (ms)	5000

Mode

Slave Mode: Disable
Trigger Source: Disable
☑ Internal Clock
Channel1: Disable
Channel2: Disable
Channel3: Disable
Channel4: Disable
Combined Channels: Disable
☐ XOR activation
☐ One Pulse Mode

Configuration

Reset Configuration

Parameter Settings | User Constants | NVIC Settings | DMA Settings

Configure the below parameters :

Search (Ctrl+F)

Counter Settings	
Prescaler (PSC - 16 bits value)	7199
Counter Mode	Up
Counter Period (AutoReload Register - 16 bits v...	4999
Internal Clock Division (CKD)	No Division
auto-reload preload	Disable
Trigger Output (TRGO) Parameters	
Master/Slave Mode (MSM bit)	Disable (Trigger input effect not delayed)
Trigger Event Selection	Reset (UG bit from TIMx_EGR)

TIM3 Mode and Configuration

Mode

Slave Mode: Disable
Trigger Source: Disable
☑ Internal Clock
Channel1: Disable
Channel2: Disable
Channel3: Disable
Channel4: Disable
Combined Channels: Disable
☐ XOR activation
☐ One Pulse Mode

Configuration

Reset Configuration

Parameter Settings | User Constants | NVIC Settings | DMA Settings

NVIC Interrupt Table	Enabled	Preemption Priority	Sub Priority
TIM3 global interrupt	☑	0	0

I2C2 Mode and Configuration

Mode

I2C: I2C

Configuration

Reset Configuration

Parameter Settings | User Constants | NVIC Settings | DMA Settings | GPIO Settings
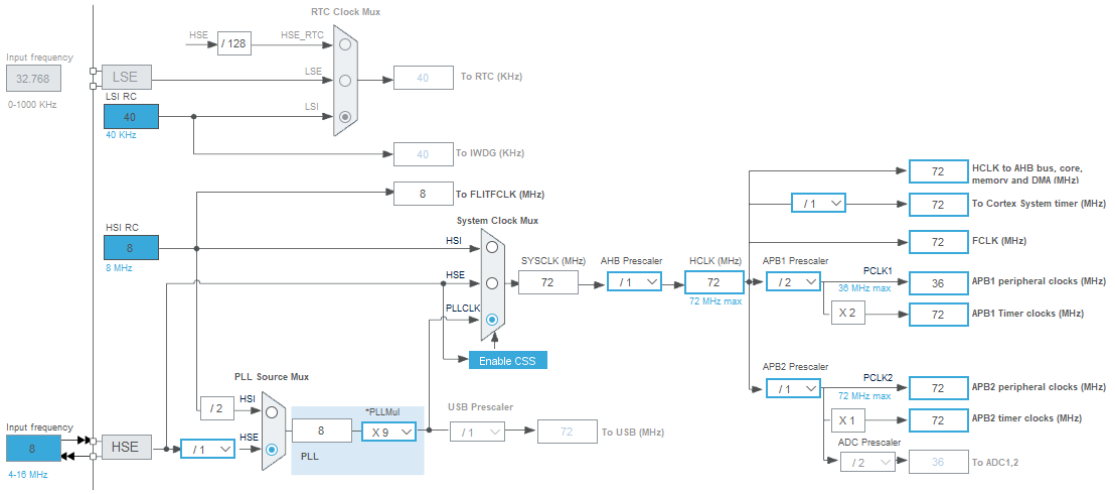
NVIC Interrupt Table	Enabled	Preemption Priority	Sub Priority
I2C2 event interrupt	☑	0	0
I2C2 error interrupt	☑	0	0