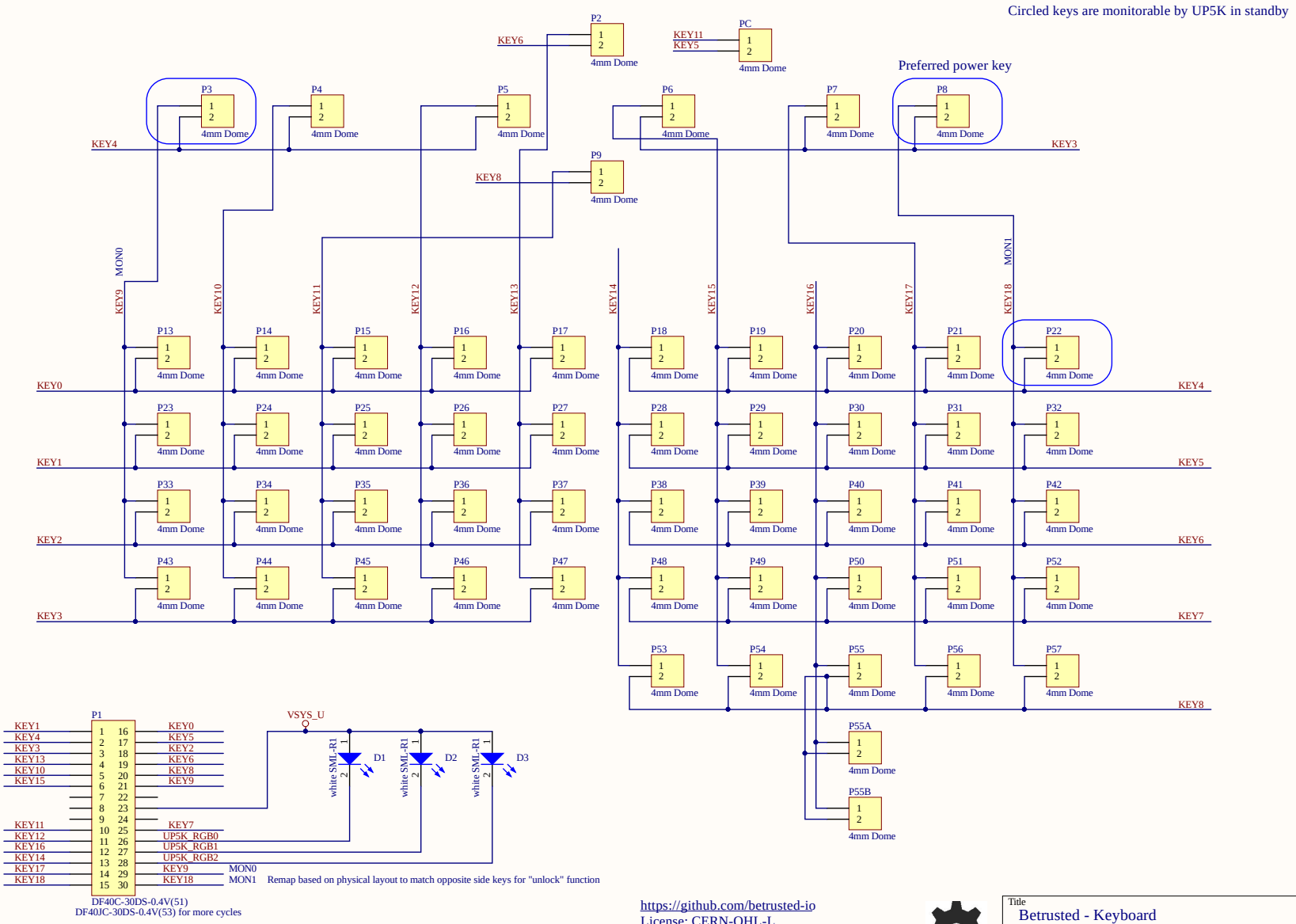

https://github.com/betrusted-io
License: CERN-OHL-L
https://www.ohwr.org/project/cernohl/wikis/home
Copyright 2019 Andrew "bunnie" Huang
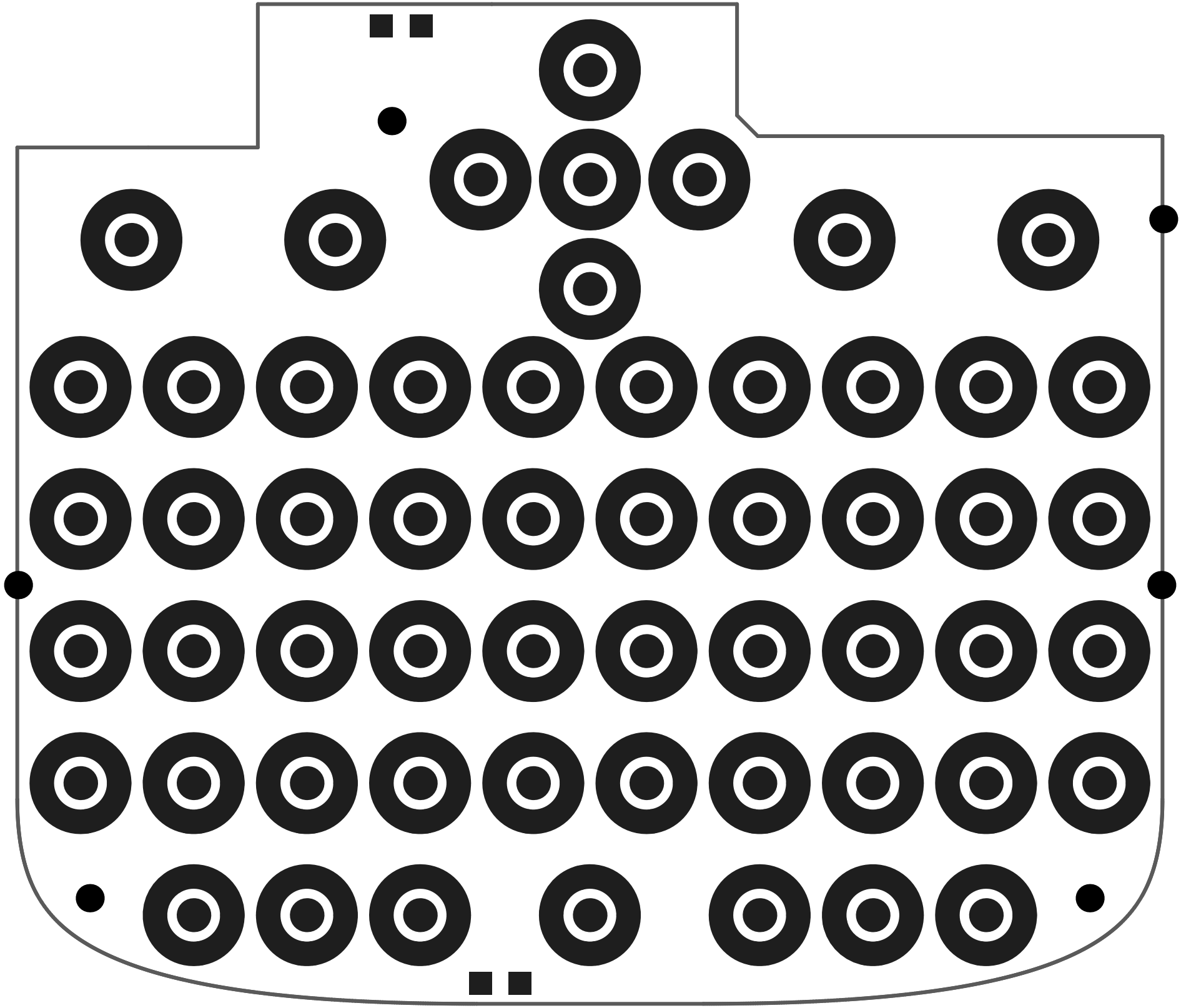
Title	Betrusted - Keyboard		
Size B	Number		Revision
Date: 12/23/2019		Sheet	of
File: F:\largework\..\kbd.SchDoc		Drawn By: