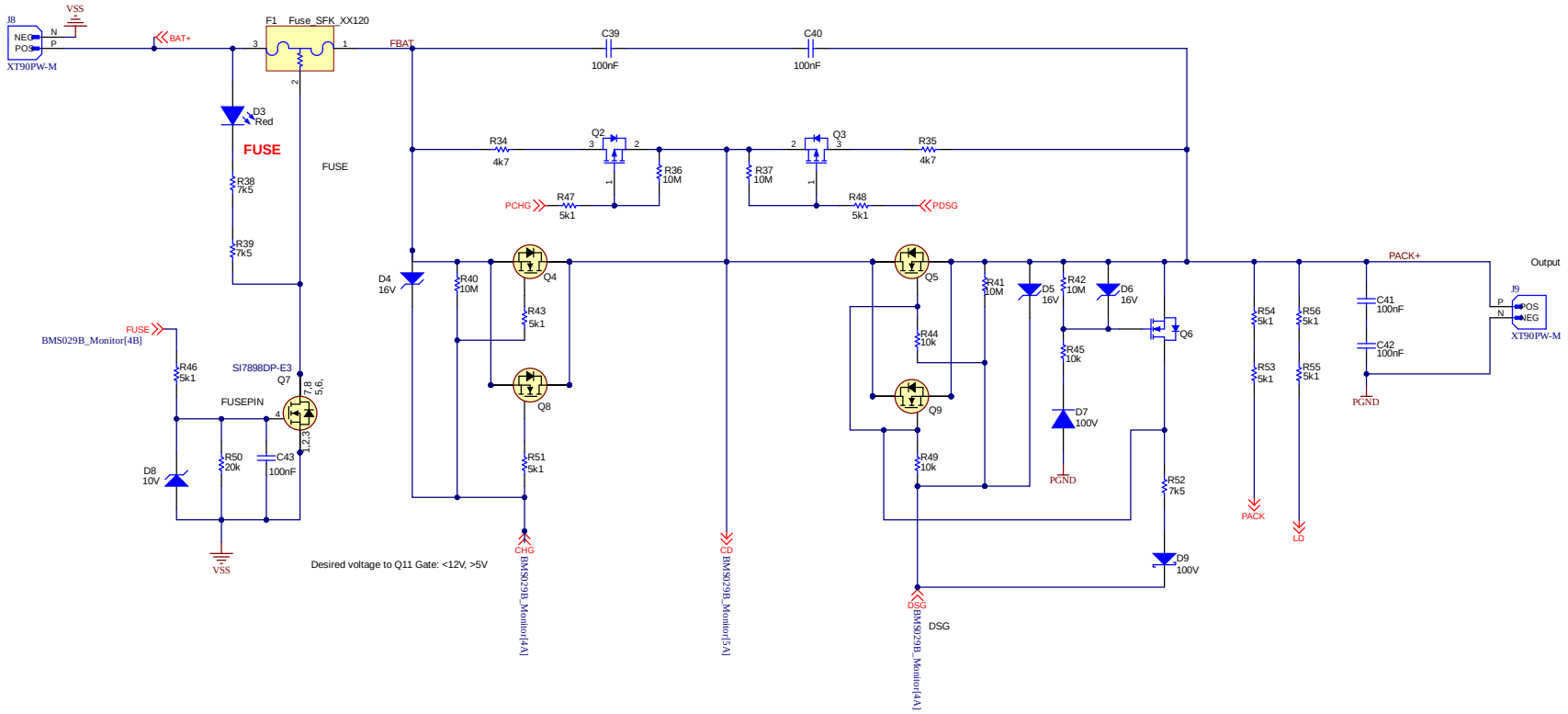
J8
NEG
POS
N
P
XT90PW-M
VSS
BAT+
F1 Fuse_SFK_XX120
FBAT
C39
100nF
C40
100nF
D3
Red
FUSE
R38
7k5
R39
7k5
FUSE
R34
4k7
Q2
R36
10M
R37
10M
Q3
R35
4k7
PCHG
R47
5k1
R48
5k1
PDSG
D4
16V
R40
10M
Q4
R43
5k1
Q8
R51
5k1
Q5
R44
10k
Q9
R49
10k
R41
10M
D5
16V
R42
10M
D6
16V
R45
10k
D7
100V
PGND
Q6
R52
7k5
D9
100V
R54
5k1
R53
5k1
R56
5k1
R55
5k1
PACK
LD
PACK+
C41
100nF
C42
100nF
PGND
Output
J9
POS
NEG
XT90PW-M
FUSE
BMS029B_Monitor[4B]
R46
5k1
SI7898DP-E3
Q7
FUSEPIN
R50
20k
C43
100nF
D8
10V
VSS
Desired voltage to Q11 Gate: <12V, >5V
CHG
BMS029B_Monitor[4A]
CD
BMS029B_Monitor[5A]
DSG
BMS029B_Monitor[4A]
DSG

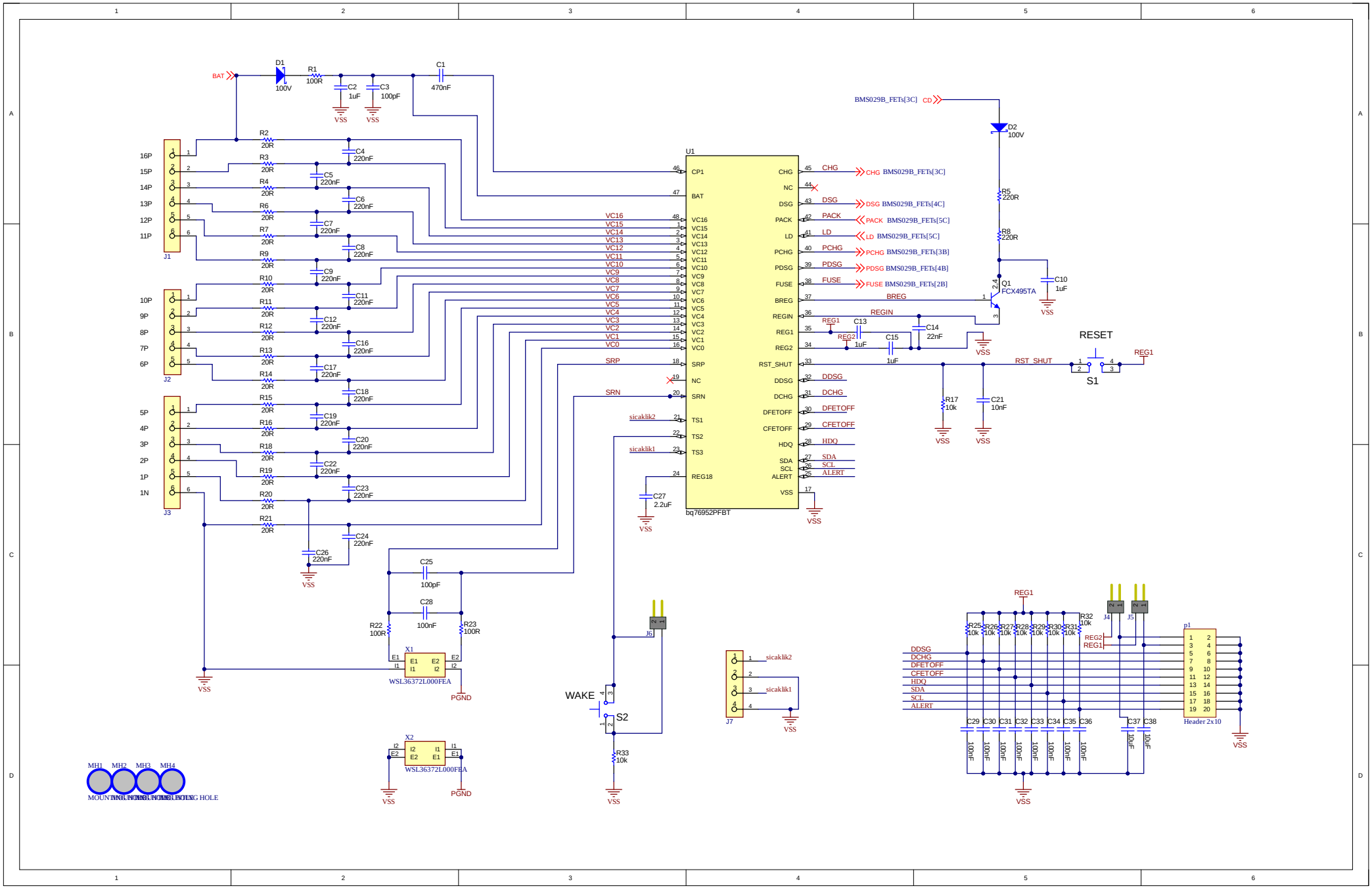
BAT
D1
100V
R1
100R
C2
1uF
C3
100pF
C1
470nF
VSS
BMS029B_FETs[3C] CD
D2
100V
R5
220R
R8
220R
C10
1uF
Q1
FCX495TA
U1
CP1
BAT
VC16
VC15
VC14
VC13
VC12
VC11
VC10
VC9
VC8
VC7
VC6
VC5
VC4
VC3
VC2
VC1
VC0
SRP
NC
SRN
TS1
TS2
TS3
REG18
CHG
NC
DSG
PACK
LD
PCHG
PDSG
FUSE
BREG
REGIN
REG1
REG2
RST_SHUT
DDSG
DCHG
DFETOFF
CFETOFF
HDQ
SDA
SCL
ALERT
VSS
bq76952PFBT
CHG BMS029B_FETs[3C]
DSG BMS029B_FETs[4C]
PACK BMS029B_FETs[5C]
LD BMS029B_FETs[5C]
PCHG BMS029B_FETs[3B]
PDSG BMS029B_FETs[4B]
FUSE BMS029B_FETs[2B]
C13
1uF
C14
22nF
C15
1uF
R17
10k
C21
10nF
RESET
S1
C27
2.2uF
sicaklik2
sicaklik1
J1
J2
J3
16P
15P
14P
13P
12P
11P
10P
9P
8P
7P
6P
5P
4P
3P
2P
1P
1N
R2
R3
R4
R6
R7
R9
R10
R11
R12
R13
R14
R15
R16
R18
R19
R20
R21
C4
C5
C6
C7
C8
C9
C11
C12
C16
C17
C18
C19
C20
C22
C23
C24
C26
C25
100pF
C28
100nF
R22
100R
R23
100R
X1
WSL36372L000FEA
PGND
J6
WAKE
S2
R33
10k
J7
X2
MH1
MH2
MH3
MH4
REG1
R25
R26
R27
R28
R29
R30
R31
R32
10k
J4
J5
REG2
DDSG
DCHG
DFETOFF
CFETOFF
HDQ
SDA
SCL
ALERT
C29
C30
C31
C32
C33
C34
C35
C36
C37
C38
10uF
p1
Header 2x10

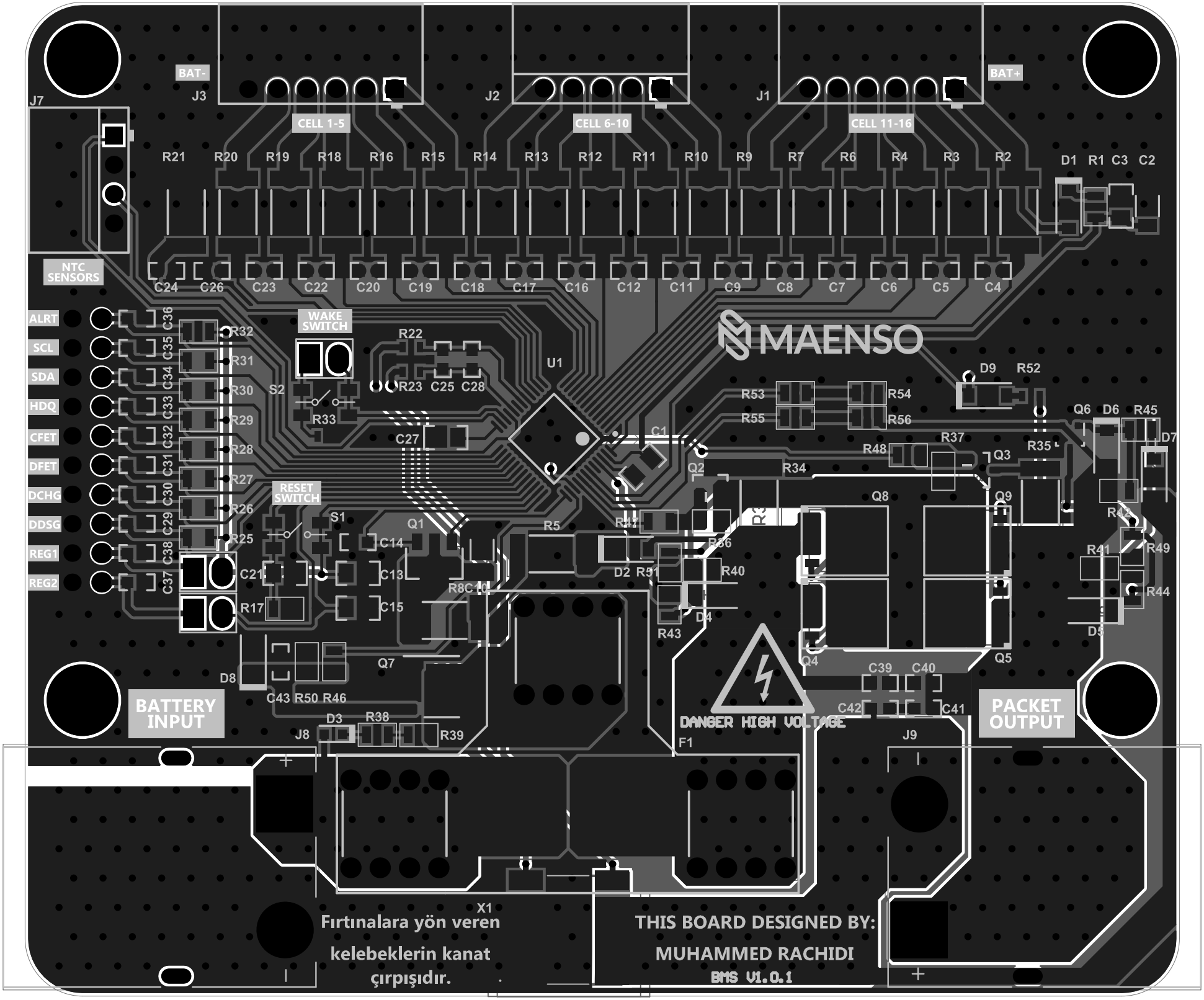
BAT-
J3
J2
J1
BAT+
J7
CELL 1-5
CELL 6-10
CELL 11-16
NTC SENSORS
ALRT
SCL
SDA
HDQ
CFET
DFET
DCHG
DDSG
REG1
REG2
WAKE SWITCH
RESET SWITCH
MAENSO
U1
DANGER HIGH VOLTAGE
BATTERY INPUT
PACKET OUTPUT
Fırtınalara yön veren kelebeklerin kanat çırpışıdır.
THIS BOARD DESIGNED BY:
MUHAMMED RACHIDI
BMS V1.0.1

Line #	Name	Description	Designator	Quantity	Footprint	Supplier 1	Supplier Part Number 1	Value
	Capacitor_0805	CAP, CBR4, * uF, 100 V, +/- 10%, X7R, 0805	C1	1	0805_HV	DigKey	445-4467-1-ND	470nF
	C3216X7R2A105K160AA	CAP, CBR4, 1 uF, 100 V, +/- 10%, X7R, 1206	C2, C10	2	1206_180	DigKey	445-4467-1-ND	1uF
	Capacitor_0805	CAP, CBR4, * uF, 100 V, +/- 10%, X7R, 0805	C3	1	0805_HV	DigKey	445-4467-1-ND	100pF
	C1608X7R1H224K080AB	CAP, CBR4, 0.22 uF, 50 V, +/- 10%, X7R, 0603	C4, C5, C6, C7, C8, C9, C11, C12, C16, C17, C18, C19, C20, C22, C23, C24, C26	17	c0603	DigKey	445-7408-1-ND	220nF
	Capacitor_0805	CAP, CBR4, * uF, 100 V, +/- 10%, X7R, 0805	C13, C15	2	0805_HV	DigKey	445-4467-1-ND	1uF
	C1608X7R1H224K080AB	CAP, CBR4, 0.22 uF, 50 V, +/- 10%, X7R, 0603	C14	1	c0603	DigKey	445-7408-1-ND	22nF
	Capacitor_0805	CAP, CBR4, * uF, 100 V, +/- 10%, X7R, 0805	C21	1	0805_HV	DigKey	445-4467-1-ND	10nF
	Capacitor_0805	CAP, CBR4, 0.22 uF, 50 V, +/- 10%, X7R, 0603	C25	1	c0603	DigKey	445-7408-1-ND	100pF
	Capacitor_0805	CAP, CBR4, * uF, 100 V, +/- 10%, X7R, 0805	C27	1	0805_HV	DigKey	445-4467-1-ND	2.2uF
	C1608X7R1H224K080AB	CAP, CBR4, 0.22 uF, 50 V, +/- 10%, X7R, 0603	C28, C29, C30, C31, C32, C33, C34, C35, C36, C39, C40, C41, C42, C43	14	c0603	DigKey	445-7408-1-ND	100nF
	C1608X7R1H224K080AB	CAP, CBR4, 0.22 uF, 50 V, +/- 10%, X7R, 0603	C37, C38	2	c0603	DigKey	445-7408-1-ND	10uF
	BAT46W-7-F	Diode, Schottky, 100 V, 0.15 A, SOD-123	D1, D2, D9	3	SOD-123			100V
	LED3MD	LED,Red, SMD	D3	1	WL-SMCW_RED			Red
	MMSZ5246B-7-F	Diode, Zener, 18 V, 500 mW, SOD-123	D4, D5, D6	3	SOD-123			18V
	1N4148W-7-F	Diode, Ultrafast, 100 V, 0.15 A, SOD-123	D7	1	SOD-123			100V
	MMSZ4697T1G	Diode, Zener, 10 V, 500 mW, SOD-123	D8	1	SOD-123			10V
	Fuse_SFK_XK120	120 Amperes SFkrSeries Self Control Protector(SCP)	F1	1	120 Amperes SFkr Series Self Control Protector(SCP)			
	6-Pin_JST-XH	6-Pin,JST-XH - Right Angle Connector Pinheader	J1, J3	2	6-Pin,JST-XH - Right Angle Connector Pinheader			
	5-Pin_JST-XH	5-Pin,JST-XH - Right Angle Connector Pinheader	J2	1	5-Pin,JST-XH - Right Angle Connector Pinheader			
	Jumpar	Jumpar 2	J4, J5, J6	3	2 pin header			
	4-Pin_JST-XH	4-Pin,JST-XH - Right Angle Connector Pinheader	J7	1	4-Pin,JST-XH - Right Angle Connector Pinheader			
	XT60PW-M	Socket, DC supply, XT60, male, PIN 2, on PCBs, THT, Colour: yellow	J8, J9	2	AMASS_XT60PW-M			
	Header 2x10	Header 2x10 0.254mm	p1	1	Header 2x10 male rightangle			
	FCX495TA	Transistor, NPN, 150 V, 1 A, AEC-Q101, SOT-89	Q1	1	SOT-89-3	Newark	65791121	150 V
	MOSFET_P_D3G1S2	MOSFET, P-CH, -150 V, -0.53 A, SOT-23	Q2, Q3	2	SOT-23			
	BSC160N15NS5ATMA1	MOSFET, N-CH, 150 V, 56 A, PG-TDSON-8	Q4, Q5, Q6, Q8	4	PG-TDSON-8	Digi-Key	BSC160N15NS5ATMA1-ND	150V
	2N7002KW	MOSFET, N-CH, 60 V, 0.31 A, SOT-323	Q6	1	SOT-323	DigKey	2N7002KWCT-ND	60V
	SI7898DP-E3	MOSFET, N-CH, 150 V, 13 A, PowerPAK SO-8	Q7	1	PowerPAK_SO-8	Digi-Key	BSS600N15NS3 GCT-ND	150V
	0805_res	0.25 W, AEC-Q200 Grade 0, 0805	R1	1	SMD-0805res	Digikey	541-20.0FCT-ND	100R
	CROW12062OR0FHEA	RES, 20.0, 1%, 0.25 W, AEC-Q200 Grade 0, 1206	R2, R3, R4, R6, R7, R8, R10, R11, R12, R13, R14, R15, R16, R18, R19, R20, R21	17	2512	Newark	42K4894	20R
	CROW12062OR0FHEA	RES, 20.0, 1%, 0.25 W, AEC-Q200 Grade 0, 1206	R5, R9	2	2512	Digikey	541-20.0FCT-ND	220R
	Resistor	0.25 W, AEC-Q200 Grade 0, 0805	R17, R25, R26, R27, R28, R29, R30, R31, R32, R44, R45, R49	12	SMD-0805res	Digikey	541-20.0FCT-ND	10k
	Resistor	RES, 100, 5%, 0.1 W, AEC-Q200 Grade 0, 0603	R22, R23	2	0603S	DigKey	541-100GCT-ND	100R
	Resistor	RES, 100, 5%, 0.1 W, AEC-Q200 Grade 0, 0603	R33	1	0603S	DigKey	541-100GCT-ND	10k
	4k7	RES, 20.0, 1%, 0.25 W, AEC-Q200 Grade 0, 1206	R34, R35	2	2512	Digikey	541-20.0FCT-ND	4k7
	10M	0.25 W, AEC-Q200 Grade 0, 0805	R36, R37, R41, R42	4	SMD-0805res	Digikey	541-20.0FCT-ND	10M
	0805_res	0.25 W, AEC-Q200 Grade 0, 0805	R38, R39	2	SMD-0805res	Digikey	541-20.0FCT-ND	7k5
	10M	0.25 W, AEC-Q200 Grade 0, 0805	R40	1	SMD-0805res	Digikey	541-20.0FCT-ND	20.0
	0805_res	0.25 W, AEC-Q200 Grade 0, 0805	R43, R46, R47, R48, R51, R53, R54, R55, R56	9	SMD-0805res	Digikey	541-20.0FCT-ND	5k1
	0805_res	0.25 W, AEC-Q200 Grade 0, 0805	R50	1	SMD-0805res	Digikey	541-20.0FCT-ND	20k
	Resistor_0603	RES, 100, 5%, 0.1 W, AEC-Q200 Grade 0, 0603	R52	1	0603S	DigKey	541-100GCT-ND	7k5
	SW_KSI3211LFS	Switch, Tactile, SPST-NO, SMT	S1, S2	2	L-KLS7-TS3402-2-S	Digikey	401-1848-1-ND	
	bq76952PBT	Multicell Battery Monitor and Protection Family, PFB0048A (TQFP-48)	U1	1	PFB0048A_N			
	WSL36372L000FEA	Res Metal Strip 36370.002 Ohm,1%,3W,+/-75ppm/°C Sulfur Resistant Pad SMD Automotive TFR	X1, X2	2	WSL36372L000FEA			