Linear inequality representation of convex domains

Computational Intelligence, Lecture 7

by Sergei Savin

Fall 2020

Content

- Convex polytopes
- Half-spaces
  - Definition
  - Construction. Simple case
  - Construction. General case
  - Combination
  - Formal description via inequalities
- Linear approximation of convex regions
- Homework

Convex polytopes

Before defining what a convex polytope is, let us look at examples:

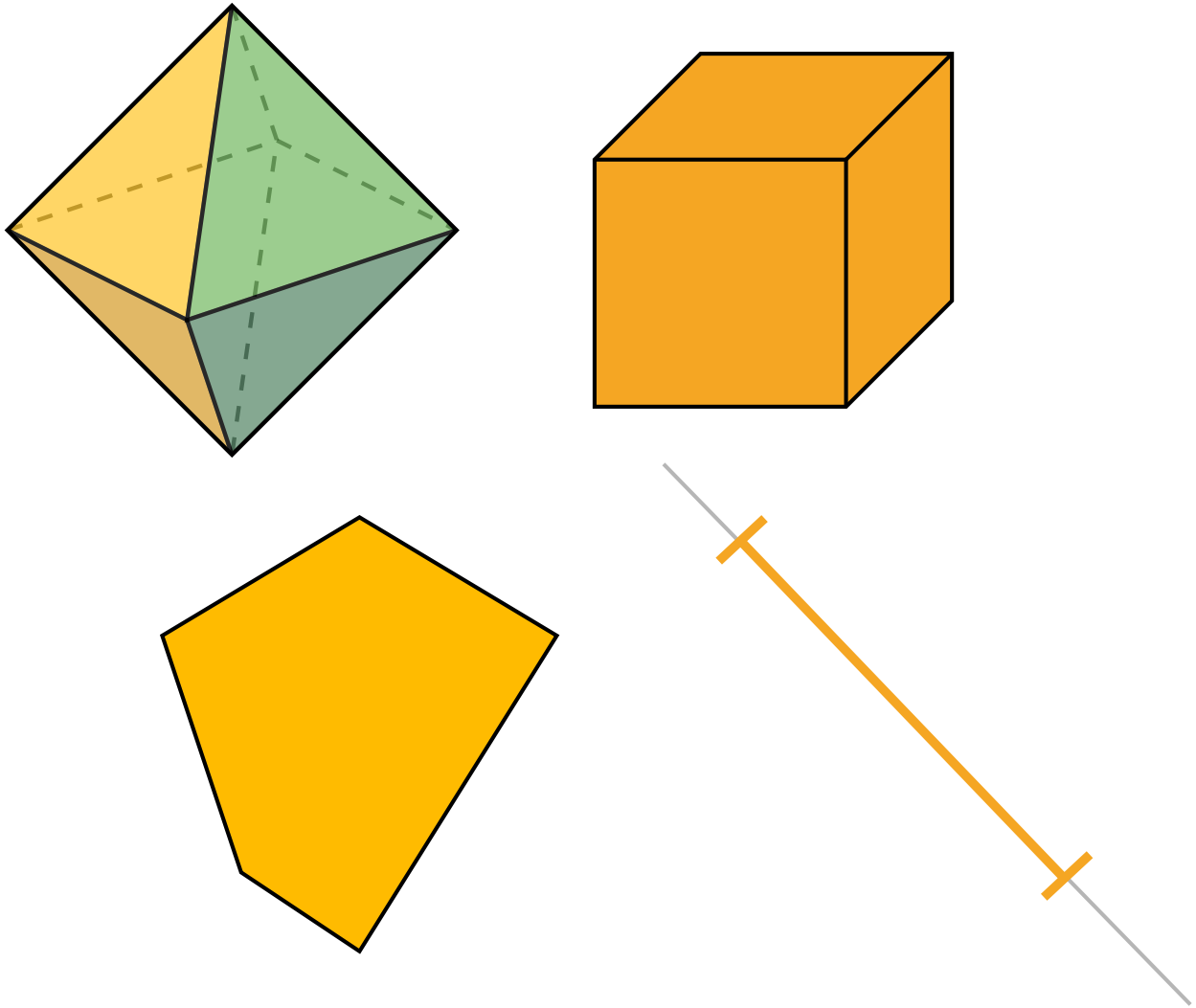

Half-spaces

Definition

We can define half-space as a set of all points $\mathbf{x}$, such that $\mathbf{a}^\top \mathbf{x} \leq b$. It has a very clear geometric interpretation. In the following image, the filled space is **not** in the half space.

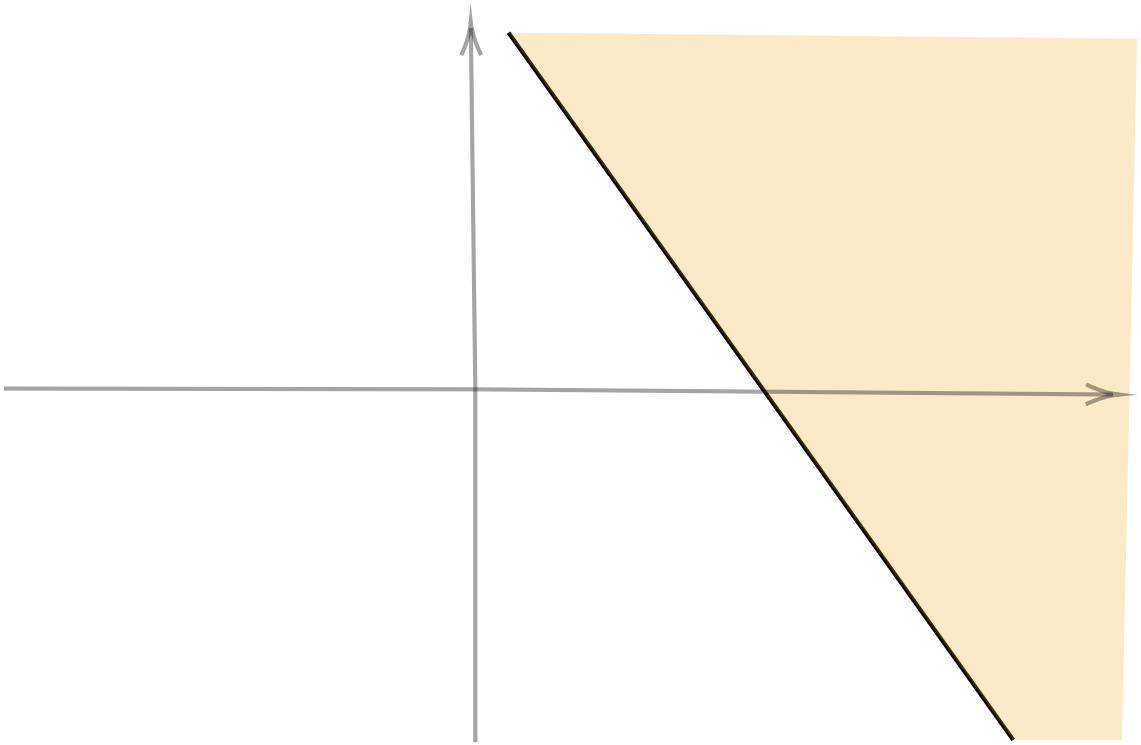

Half-spaces

Construction. Simple case

Consider half-space that passes through the origin, and defined by its normal vector $\mathbf{n}$:

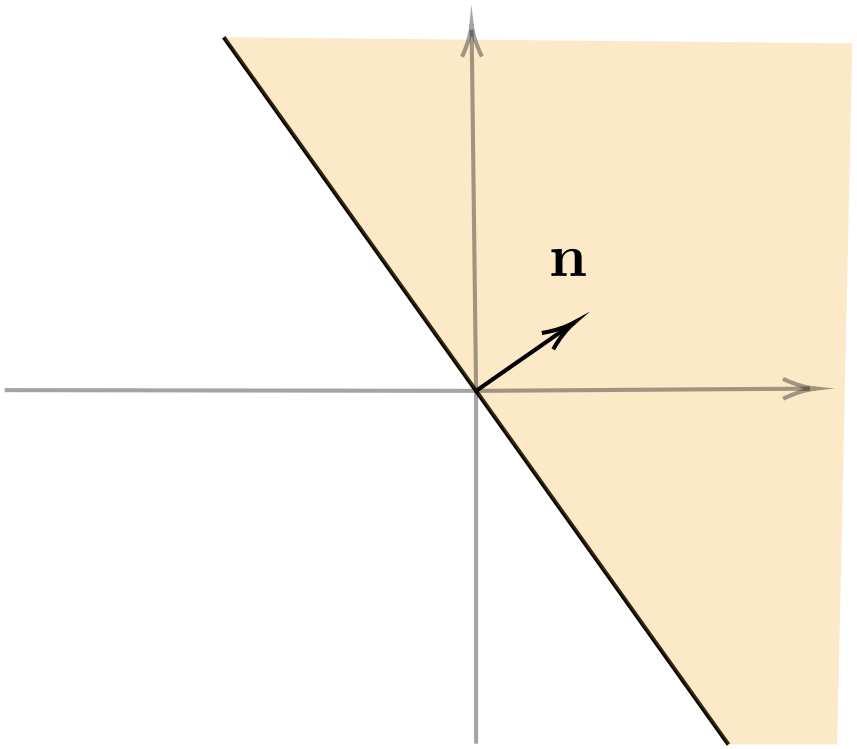

It is easy to see that this half-space can be defined as "all vectors $\mathbf{x}$, such that $\mathbf{n} \cdot \mathbf{x} \leq 0$", which is the same as using $\mathbf{n}$ instead of $\mathbf{a}$ in our original definition, setting $b = 0$.

Half-spaces

Construction. General case

In the general case there is some distance between the boundary of the half-space and the origin, let's say d.

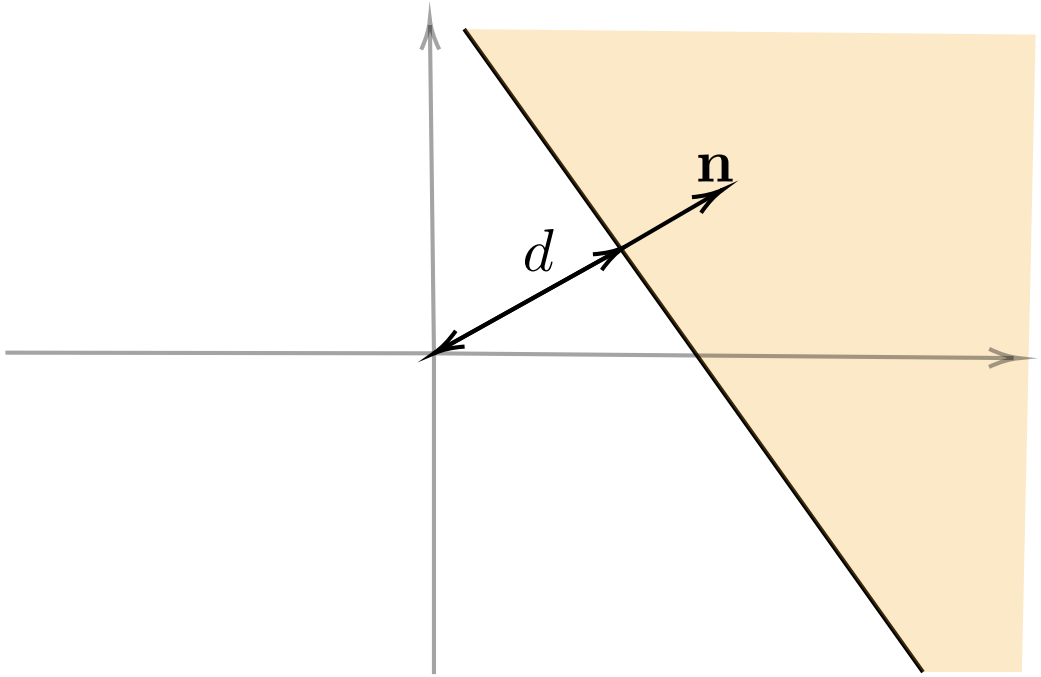

The same way we see, that the half space can be defined as "all vectors $\mathbf{x}$, such that $\mathbf{n} \cdot \mathbf{x} \leq d$". This is the same as making $\mathbf{a} = \mathbf{n}$ and $b = d$ in our original definition. However, if $\mathbf{a}$ is not a unit vector, $b = d||\mathbf{a}||$.

Half-spaces

Combination

We can define a region of space as an *intersection* of half-spaces $\mathbf{a}_i^\top \mathbf{x} \leq b_i$:

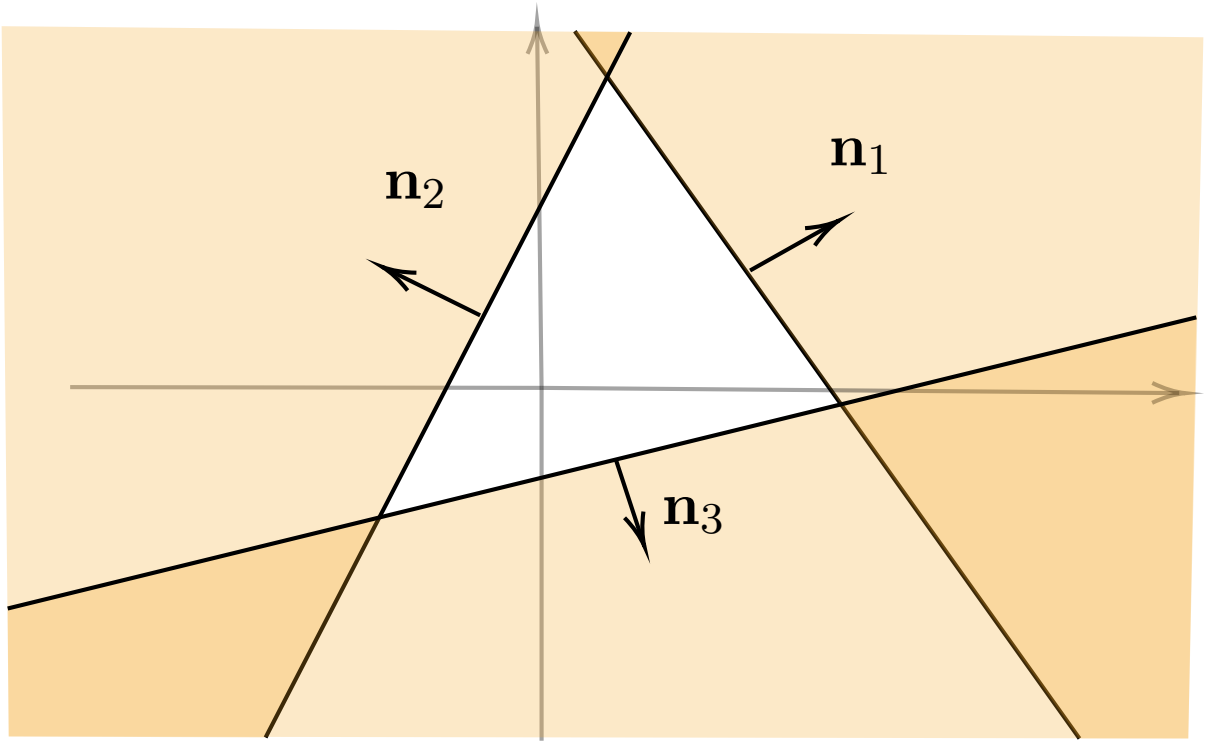

Resulting region will be easily described as $\begin{bmatrix} \mathbf{a}_1^\top \\ \dots \\ \mathbf{a}_k^\top \end{bmatrix} \mathbf{x} \leq \begin{bmatrix} b_1 \\ \dots \\ b_k \end{bmatrix}$

Half-spaces

Formal description via inequalities

The last result allows us to write any convex polytope as a matrix inequality:

$$\mathbf{A}\mathbf{x} \leq \mathbf{b} \tag{1}$$

And conversely, any matrix inequality (1) represents either an empty set or a convex polytope.

Linear approximation of convex regions

Some convex regions can be easily approximated using polytopes.

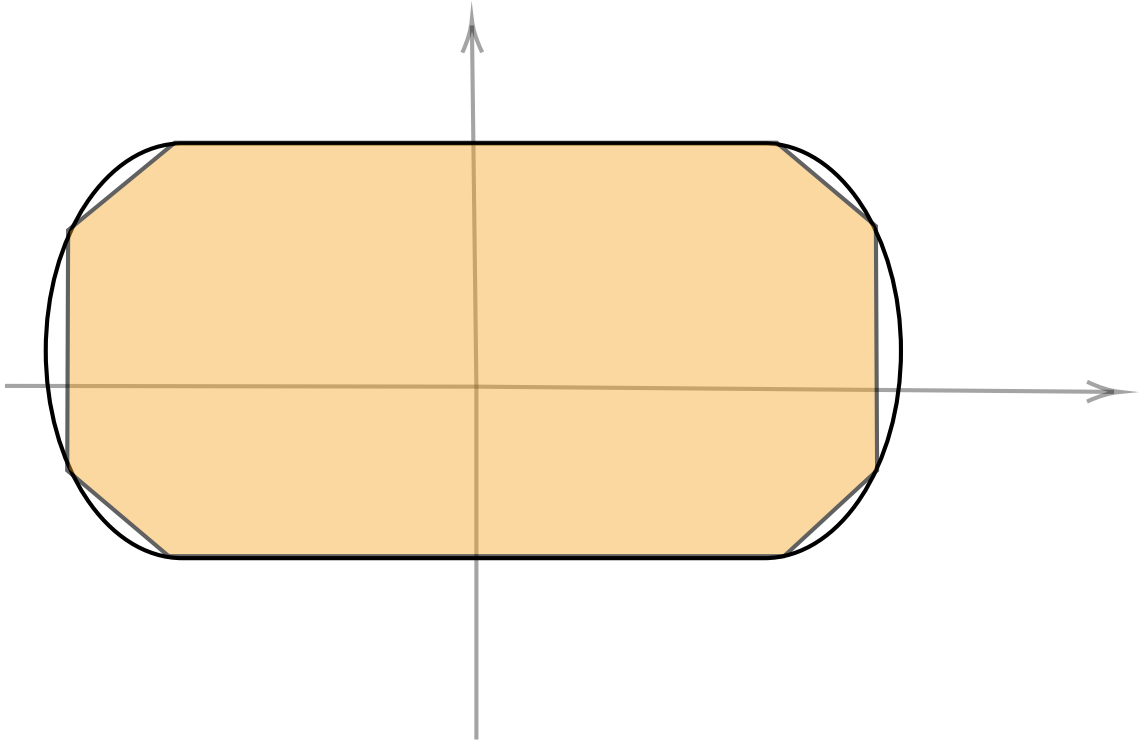

Which allows to represent constraints on $\mathbf{x}$ to belong in such a region as a matrix inequality

Homework

Represent in matrix inequality form the following figures:

- Equilateral triangle
- A square
- Parallelepiped
- Trapezoid

Lecture slides are available via Moodle.

You can help improve these slides at:
github.com/SergeiSa/Computational-Intelligence-Slides-Fall-2020

Check Moodle for additional links, videos, textbook suggestions.