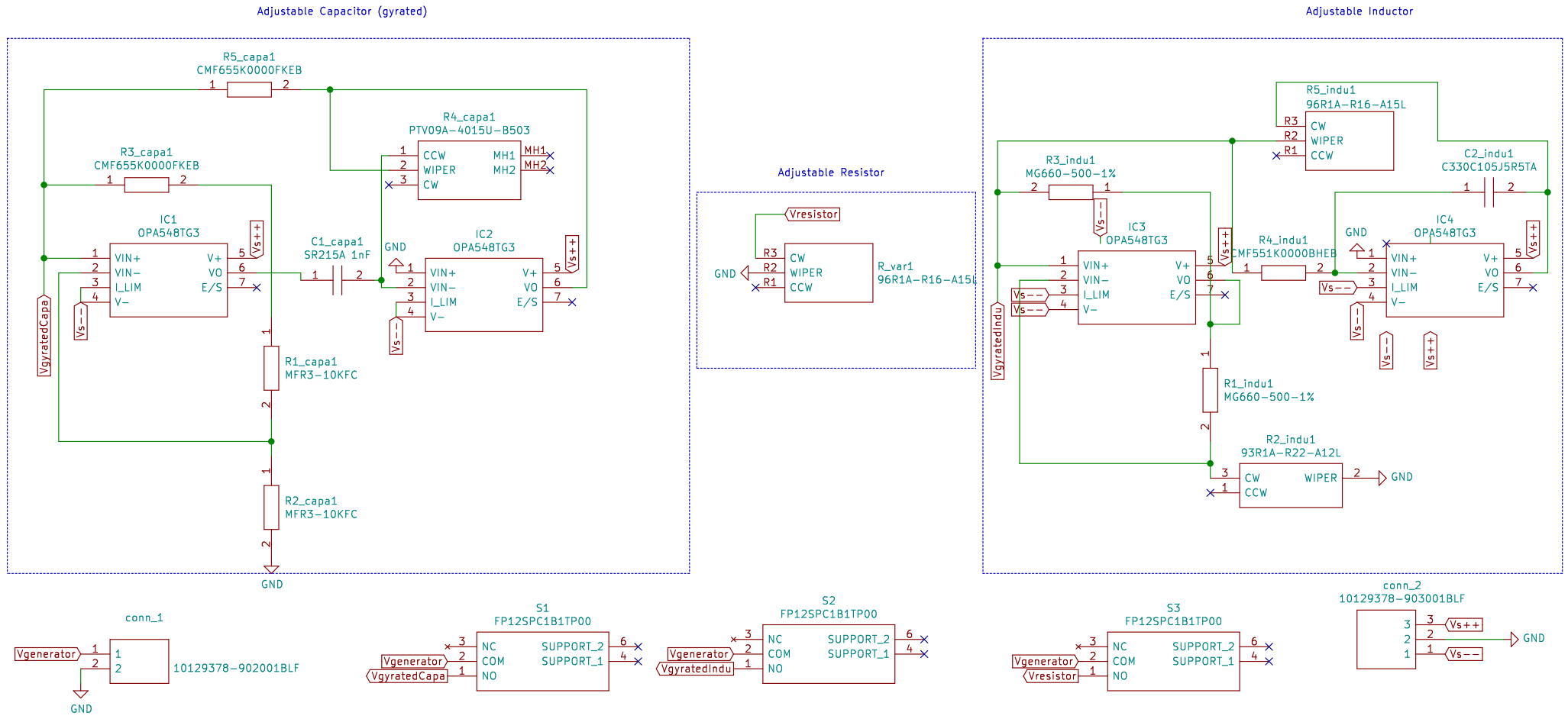

Stage Centre Spatial de Liège

Sheet: /

File: Programmable RLC.sch

Title: Programmable RLC Impedance

Size: A4	Date:	**Rev: 1.0**
KiCad E.D.A. kicad (5.1.10)-1		Id: 1/1