Vectors and 3D Geometry

CHAPTER 1

Introduction to 3D Geometry **1.1–1.2**

DPP 1.1 Introduction to 3D Geometry 1.1

Ananth Garg

CHAPTER 1 Introduction to 3D Geometry

DPP 1.1
Introduction to 3D Geometry

Single Correct Answer Type

1. Let points (1, 2, 3), (0, –4, 3), (2, 3, 5) and (1, –5, –3) be vertices of a tetrahedron. Now, consider the following two statements.

S_1: The point where line joining the mid points of opposite edges are concurrent is (1, –1, 2).

S_2: The point where line segments joining vertex to the centroid of the opposite face are concurrent is (1, –1, 2).

Then

(a) Only S_1 is true
(b) Only S_2 is true
(c) Both S_1 and S_2 are false
(d) Both S_1 and S_2 are true

2. In a three dimensional coordinate system P, Q and R are the images of a point $A(a, b, c)$ in the xy- the yz- and the zx-planes, respectively. If G is the centroid of triangle PQR, then

(a) area of triangle AOG is $a^2 + b^2 + c^2$
(b) area of triangle AOG is $\frac{2}{3}(a^2 + b^2 + c^2)$
(c) points A, O and G are collinear
(d) none of these

3. A parallelepiped is formed by the planes drawn parallel to the coordinate axes through the points A (1, 2, 3) and B (9, 8, 5). The volume of that parallelepiped is equal to (in cubic units)

(a) 192 (b) 48
(c) 32 (d) 96

4. The ratio in which the plane $2x - 1 = 0$ divides the line joining (–2, 4, 7) and (3, –5, 8) is

(a) 2 : 3 (b) 4 : 5
(c) 7 : 8 (d) 1 : 1

5. Given two points A and B. If the area of triangle ABC is constant, then the locus of point C in space is

(a) sphere (b) cone
(c) cylinder (d) none of these

6. A line segment joining (1, 0, 1) and the origin (0, 0, 0) is revolved about the x-axis to form a right circular cone. If (x, y, z) is any point on the cone, other than the origin, then it satisfies the equation

(a) $x^2 - 2y^2 - z^2 = 0$ (b) $x^2 - y^2 - z^2 = 0$
(c) $2x^2 - y^2 - 2z^2 = 0$ (d) $x^2 - 2y^2 - 2z^2 = 0$

7. If the sum of square of distances of point P from the three axes is constant, then the locus of point P is

(a) plane (b) cylinder
(c) cone (d) sphere

8. If the directions cosines of a line are k, k and k, then
(a) $k > 0$ (b) $0 < k < 1$
(c) $k = 1$ (d) $k = \frac{1}{\sqrt{3}}$ or $-\frac{1}{\sqrt{3}}$

9. Consider four points A (0, –1, –1), B (4, 5, 1), C (3, 9, 4) and D (– 4, 4, 4). Now, consider the following two statements:
S_1: AB divides CD externally in the ratio 5 : 3.
S_2 : CD divides AB externally in the ratio 1 : 2.
Then
(a) Only S_1 is true
(b) Only S_2 is true
(c) Both S_1 and S_2 are false
(d) Both S_1 and S_2 are true

Multiple Correct Answers Type

10. Consider the line segment joining the points $A \equiv (2, 3, 4)$ and $B \equiv (-1, 2, -5)$. Then
(a) xy-plane divides AB internally in the ratio 4 : 5
(b) xz-plane divides AB externally in the ratio 2 : 3
(c) yz-plane divides AB internally in the ratio 2 : 1
(d) xy-plane divides AB internally in the ratio 2 : 3

11. Consider the sphere having equation $x^2 + y^2 + z^2 - 2x + 4y - 6z - 4 = 0$. Then
(a) Radius of the circle in which sphere cuts the xy-plane is 3.
(b) Radius of the circle in which sphere cuts the yz-plane is $\sqrt{17}$.
(c) Radius of the circle in which sphere cuts the yz-plane is $\sqrt{10}$.
(d) None of these

12. If the equation of one of the faces of the cube whose volume is 125 cu. units is $z = 3$, then the equation of the other faces can be
(a) $z = 4$ (b) $z = -2$
(c) $z = 8$ (d) $z = 10$

13. If the line joining the points A (2, –1, 4) and B (–3, 1, a) is intersected by the x-axis at point P, then
(a) the value of 'a' is –4
(b) the value of 'a' is –2
(c) the abscissa of point P is –1
(d) the abscissa of point P is –1/2

Numerical Value Type

14. The distance of point P from the point (2, 3, –1) is twice the distance of P from the point (–1, 0, 2), then the locus of P is a sphere square of whose radius is _____.

15. If the combined equation of two faces of a cube is $y^2 - 4y - 5 = 0$, then the volume of the cube (in cu. units) is _____.

16. If the two ends of diagonal of a cube are (1, 2, 3) and (–2, 0, –3), then the volume of cube is $\frac{\lambda}{3\sqrt{3}}$ cu. units, where λ is _____.

Answer Key

Single Correct Answer Type

1. (d) **2.** (c) **3.** (d) **4.** (d) **5.** (c) **6.** (b) **7.** (d) **8.** (d) **9.** (d)

Multiple Correct Answers Type

10. (a, b, c) **11.** (a, b, c) **12.** (b, c) **13.** (a, d)

Numerical Value Type

14. (13) **15.** (216) **16.** (343)

Solutions

Anantha Gandhi

CHAPTER 1

DPP 1.1

Single Correct Answer Type

1. (d) We know that line joining the midpoints of opposite edges of a tetrahedron are concurrent at point which is the mean of the vertices of tetrahedron.

Also, line segments joining vertex to the centroid of the opposite face of tetrahedron are concurrent at the point which is the mean of the vertices of tetrahedron.

2. (c) $A \equiv (a, b, c)$

So, $P \equiv (a, b, -c)$, $Q \equiv (-a, b, c)$ and $R \equiv (a, -b, c)$.

$\therefore$ Centroid of triangle PQR is $(a/3, b/2, c/3) \equiv G$

Now, points A, O, G are collinear

So, area of triangle AOG is zero.

3. (d) Lengths of the edges of the parallelepiped are 8, 6 and 2.

So, the volume of parallelepiped $= 8 \times 6 \times 2$

$= 96$ cu. units

4. (d) The coordinates of the point which divides the segment joining the points $(-2, 4, 7)$ and $(3, -5, 8)$ in the ratio $k : 1$ are $\left(\frac{3k-2}{k+1}, \frac{-5k+4}{k+1}, \frac{8k+7}{k+1}\right)$.

As this point lies on the plane $2x - 1 = 0$, we have

$$\frac{3k-2}{k+1} = \frac{1}{2} \Rightarrow k = 1.$$

So, the required ratio is $1 : 1$.

5. (c) Points A and B are given and area of triangle ABC is constant.

$\therefore$ Distance of vertex C from the base AB is constant.

$\therefore$ All such points lie on infinite lines parallel to AB at constant distance.

These infinite lines form a cylinder in the space.

6. (b) ΔOPM and ΔOAC are similar

$$\therefore \quad \frac{OP}{OA} = \frac{OM}{OC} \Rightarrow \frac{\sqrt{x^2 + y^2 + z^2}}{\sqrt{2}} = \frac{x}{1}$$

$$\Rightarrow \quad x^2 + y^2 + z^2 = 2x^2$$

$$\Rightarrow \quad x^2 - y^2 - z^2 = 0$$

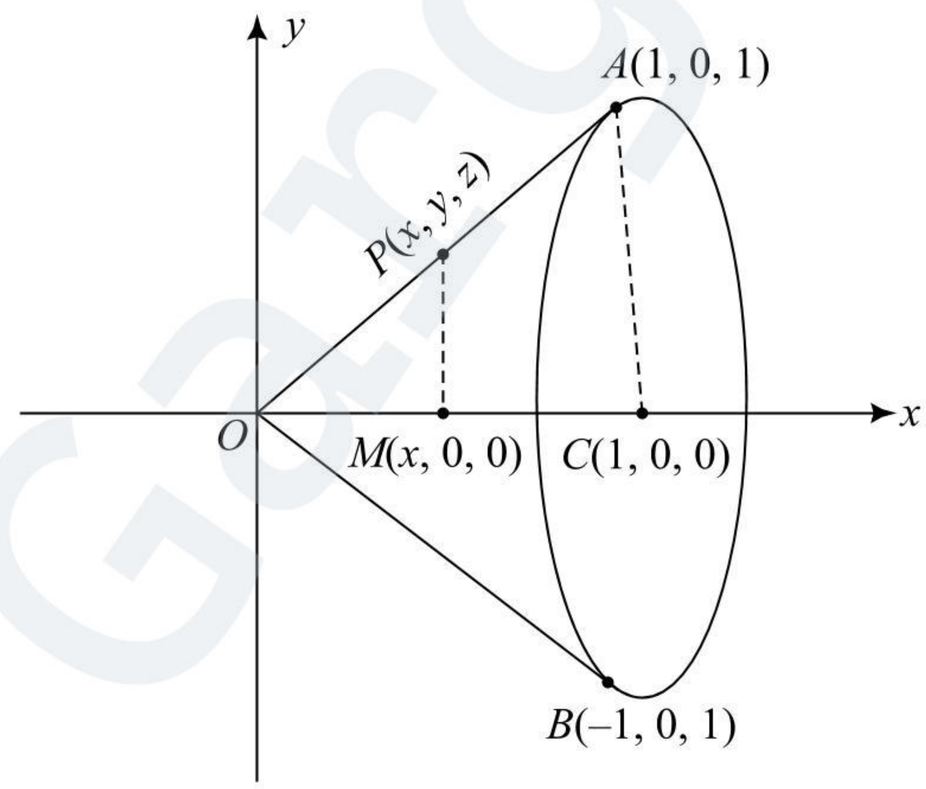

7. (d) We have $x^2 + y^2 + y^2 + z^2 + x^2 + z^2 = k$

$\therefore \quad x^2 + y^2 + z^2 = k/2$

So, the locus is sphere.

8. (d) Since, direction cosines of the given line are k, k and k.

$l = k$, $m = k$ and $n = k$

We know that, $l^2 + m^2 + n^2 = 1$

$$\Rightarrow \quad k^2 + k^2 + k^2 = 1$$

$$\Rightarrow \quad k^2 = \frac{1}{3}$$

$$\therefore \quad k = \pm \frac{1}{\sqrt{3}}$$

9. (d) Point dividing AB in the ratio $\lambda : 1$ is

$$P\left(\frac{4\lambda+0}{\lambda+1}, \frac{5\lambda-1}{\lambda+1}, \frac{\lambda-1}{\lambda+1}\right)$$

Point dividing CD in the ratio $\mu : 1$ is

$$Q\left(\frac{-4\mu+3}{\mu+1}, \frac{4\mu+9}{\mu+1}, \frac{4\mu+4}{\mu+1}\right)$$

Comparing points P and Q, we get

$$\frac{4\lambda}{\lambda+1} = \frac{-4\mu+3}{\mu+1}, \frac{5\lambda-1}{\lambda+1} = \frac{4\mu+9}{\mu+1},$$

$$\frac{\lambda-1}{\lambda+1} = \frac{4\mu+4}{\mu+1}$$

$$\Rightarrow \quad 4-\frac{4}{\lambda+1}=-4+\frac{7}{\mu+1},$$

$$5-\frac{6}{\lambda+1}=4+\frac{5}{\mu+1}, \frac{\lambda-1}{\lambda+1}=4$$

$$\Rightarrow \quad \lambda=-\frac{5}{3}, \mu=-\frac{1}{2}$$

So, AB divides CD externally in the ratio 5 : 3 and CD intersect AB externally in the ratio 1 : 2

Multiple Correct Answers Type

10. (a, b, c)

Let xy-plane divide AB in the ratio $\lambda : 1$.

$$\therefore \quad \frac{-5\lambda+4}{\lambda+1}=0 \quad \Rightarrow \quad \lambda=4/5$$

So, xy-plane divides AB internally in the ratio 4 : 5.

Let xz-plane divide AB in the ratio $\lambda : 1$.

$$\therefore \quad \frac{2\lambda+3}{\lambda+1}=0 \quad \Rightarrow \quad \lambda=-2/3$$

So, xz-plane divides AB externally in the ratio 2 : 3.

Let yz-plane divide AB in the ratio $\lambda : 1$.

$$\therefore \quad \frac{-\lambda+2}{\lambda+1}=0 \quad \Rightarrow \quad \lambda=2$$

So, yz-plane divides AB internally in the ratio 2 : 1.

11. (a, b, c)

Sphere cuts the xy-plane in the circle whose equation is $x^2 + y^2 - 2x + 4y - 4 = 0$.

Radius of this circle is $\sqrt{1 + 4 + 4} = 3$.

Sphere cuts the yz-plane in the circle whose equation is $y^2 + z^2 + 4y - 6z - 4 = 0$

Radius of this circle is $\sqrt{4 + 9 + 4} = \sqrt{17}$

Sphere cuts the zx-plane in the circle whose equation is $x^2 + z^2 - 2x - 6z - 4 = 0$

Radius of this circle is $\sqrt{1 + 9 + 4} = \sqrt{10}$

12. (b, c)

Volume of the cube is 125 cu. units.

So, the side of the cube is 5 units.

Therefore, faces parallel to the given face $z = 3$ can be $z = -2$ and $z = 8$.

13. (a, d)

Let point $P(\alpha, 0, 0)$ on x-axis divide AB in the ratio $\lambda : 1$. Then

$$(\alpha, 0, 0) \equiv \left(\frac{-3\lambda+2}{\lambda+1}, \frac{\lambda-1}{\lambda+1}, \frac{a\lambda+4}{\lambda+1}\right)$$

$$\therefore \quad \lambda = 1 \quad \Rightarrow \quad \alpha = -1/2 \text{ and } a = -4.$$

Numerical Value Type

14. (13)

Let $P \equiv (x, y, z)$

Given points are $A(2, 3, -1)$ and $B(-1, 0, 2)$.

Given that $AP = 2BP$

$\therefore \quad AP^2 = 4BP^2$

$\Rightarrow \quad (x-2)^2 + (y-3)^2 + (z+1)^2$

$\quad = 4[(x+1)^2 + y^2 + (z-2)^2]$

$\Rightarrow \quad x^2 + y^2 + z^2 + 4x + 2y - 6z + 1 = 0$

This is sphere, whose center is $(-2, -1, 3)$ and radius is $\sqrt{4 + 1 + 9 - 1} = \sqrt{13}$.

15. (216)

$y^2 - 4y - 5 = 0$

$\therefore \quad (y-5)(y+1) = 0$

$\Rightarrow \quad y = -1$ and $y = 5$.

Distance between these two parallel planes is 6 units.

So, volume of cube is $6^3 = 216$ cu. units.

16. (343)

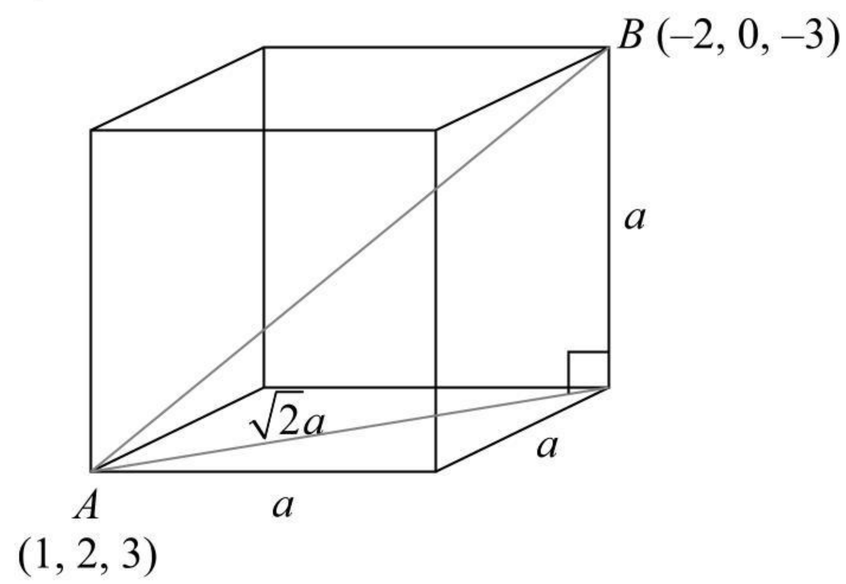

Two ends of diagonal of cube are $A(1, 2, 3)$ and $B(-2, 0, -3)$.

$\therefore \quad AB = 7$.

So, $(\sqrt{2}a)^2 + a^2 = 7^2$

$$\Rightarrow \quad a^2 = \frac{49}{3} \quad \Rightarrow \quad a = \frac{7}{\sqrt{3}}$$

So, volume of cube $= a^3 = \left(\frac{7}{\sqrt{3}}\right)^3 = \frac{343}{3\sqrt{3}}$