WGSN ANALYSIS

#Beltification

#BeltBag

#AddonAccessories

#StatementBelts

COMPETITOR ANALYSIS

Brand	Product Type	Key Features	Target Audience
Gucci	Luxury Fashion belts	High-quality leather, iconic GG logo, minimal functionality	High-end luxury consumers
Hernes	Premium reversible belts	Elegant design, reversible feature, premium craftsmanship	Luxury market
Bellroy	Utility Belts	Slim profile, RFID blocking pouches, hidden compartments	Professionals and travelers
Carhatt	Work Belts	Heavy-duty material, durable buckles, simple design	Workers and outdoor enthusiasts
Upcharted Supply Co.	Survival Belts	Hidden compartments for tools, lightweight, tactical features	Adventurers and survivalists
Nomatic	Everyday carry belts	Magnetic buckles, minimalistic design, compact storage for cash/cards	Tech-savvy professionals and minimalists
Timbuk2	Crossbody belts with bag options	Multifunctional, compact designs, urban style	Urban professionals and casual users

THE WEAVE THEORY

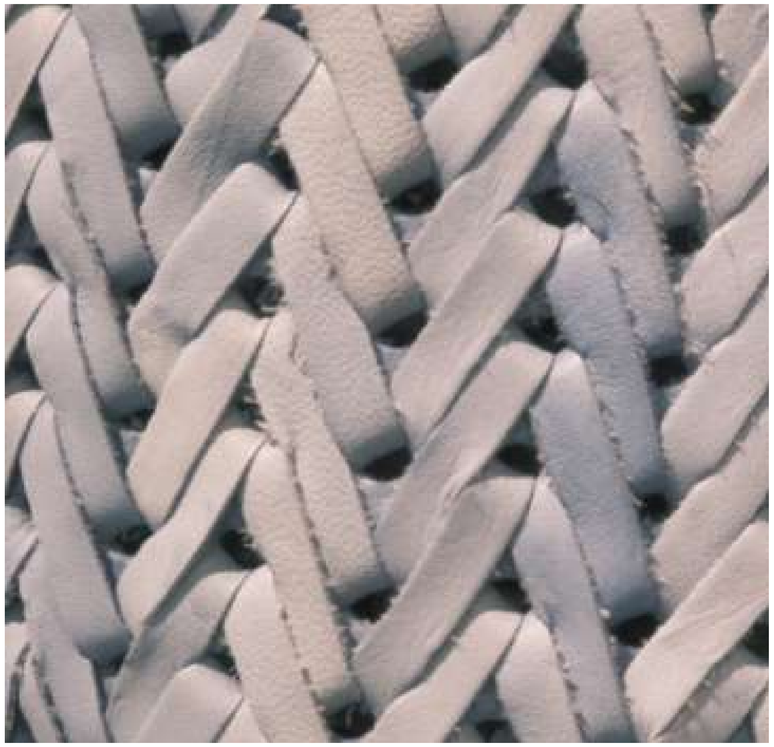

#ChunkyConstruction

#Craftsmanship

#BraidingTechniques

Weaving is a time-honored technique that seamlessly blends artistry and functionality. Its interlaced patterns ensure durability while offering endless opportunities for creative expression. Choosing weaving allows for the creation of a belt that is both aesthetically unique and structurally robust, meeting the demands of modern lifestyles.

This method also celebrates a rich heritage of craftsmanship, where innovation meets tradition, making it an ideal choice for a product that values versatility and elegance.

MARKET ANALYSIS

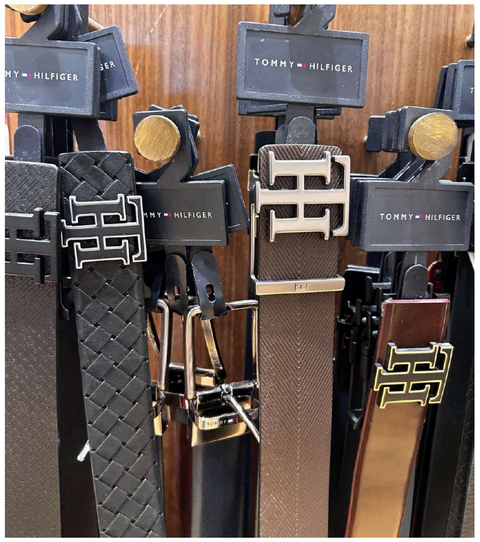

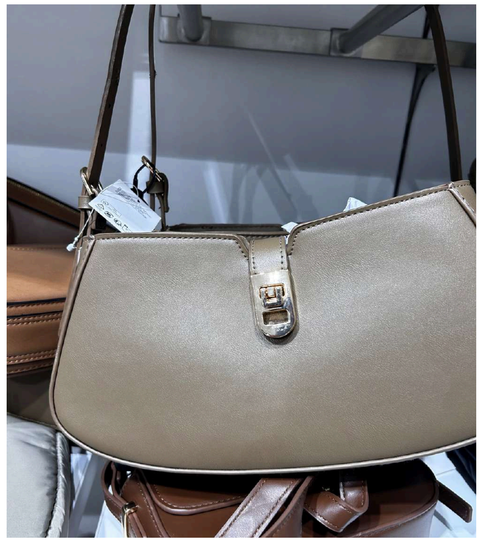

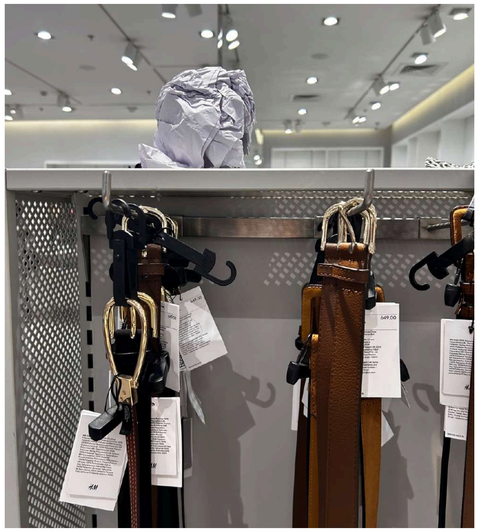

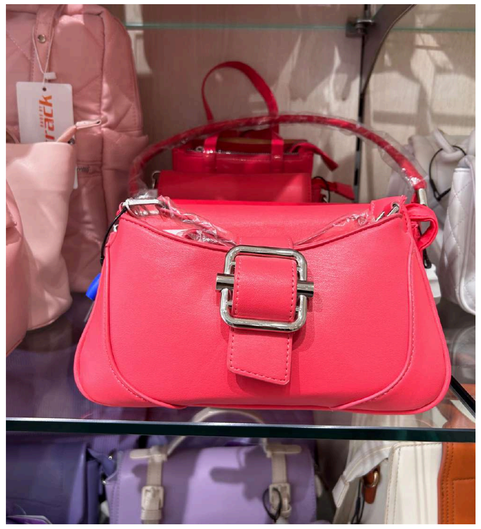

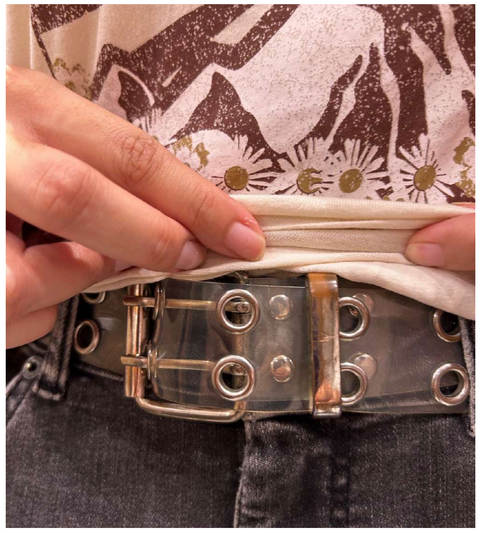
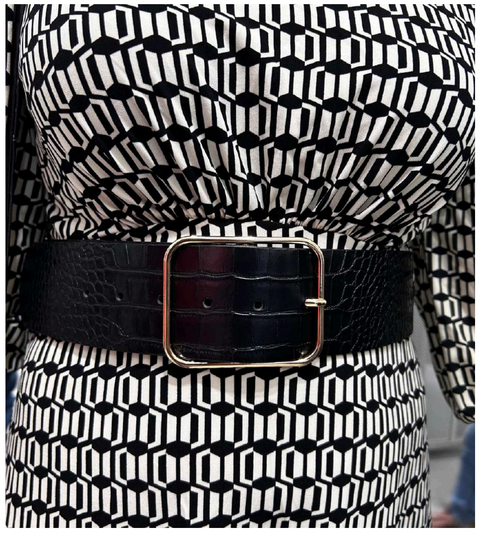

Not so unique but basic belts available in the market, that offer the same personality to anyone who wears them.

DESIGN BRIEF

Wandering Weaves

To design a multifunctional belt that seamlessly combines functionality, style, and versatility. The belt should serve as an innovative business gear accessory while being adaptable for casual outings, reflecting a balance of craftsmanship and modern utility.

MATERIAL :

- High-quality Leather for durability and style.
- Reinforced stitching and lightweight hardware.

AESTHETICS :

- Minimalistic yet elegant design suitable for professional and casual environments.
- Incorporate a modern color palette (neutrals or muted tones).

FEATURES :

- Dedicated pockets for AirPods, keys, phone, and sunglasses.
- Convertible design to transition into a crossbody bag for casual use.
- Adjustable straps for a personalized fit.

USER PERSONA

Attributes	Details
Name	Vanshika Sood
Age	21
Gender	Female
Income	Upper Middle Class
Lifestyle	Urban professional with an active lifestyle, enjoys networking and attending casual outings
Interests	Fashion, travel, technology,
Buying Behaviour	Values functionality, aesthetics, and versatility; prefers products that align with her dynamic lifestyle
Values	Practicality, quality, and sustainability
Personality	Organized, stylish, and forward-thinking
Goals	Seamlessly transition between professional and casual settings without compromising on style

PAIN POINTS :

- Struggles to keep essentials organized during busy workdays or casual outings
- Overly bulky bags or lack of organized storage in accessories

MOTIVATIONS:

Time efficiency, multifunctionality, and elegance in everyday accessories

MOODBOARD

Coffee. Work. Repeat.
Weekends by the cafe
The Fashionista Boss
Living two lives
So much to carry.
My bag is my life

LOOKBOARD

Chic. Classy. Elegant

ABOUT THE COLLECTION

Loop & Lore

A belt that weaves timeless style with meaningful design. Crafted with precision and premium materials, it embodies a perfect balance of functionality and elegance. Loop & Lore celebrates the stories of modern sophistication, making it an essential accessory for those who cherish style with substance.

DESIGN – 1

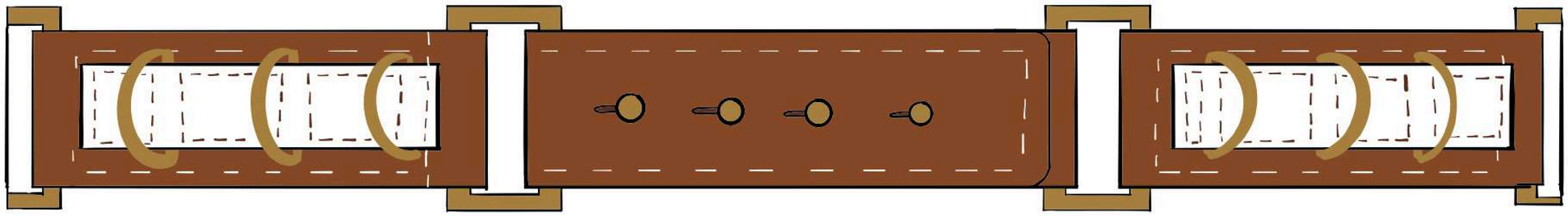

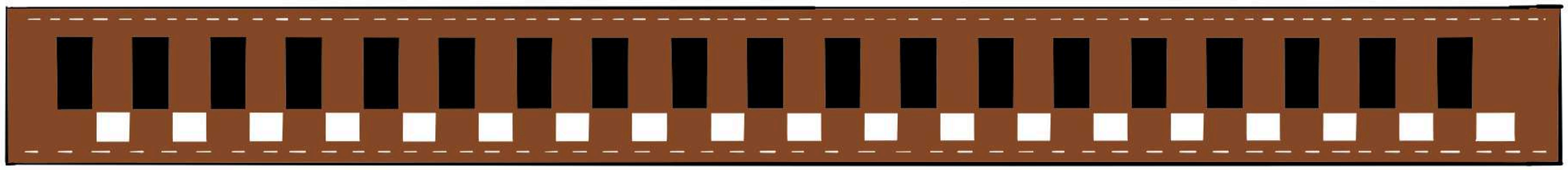

DESIGN 2 –

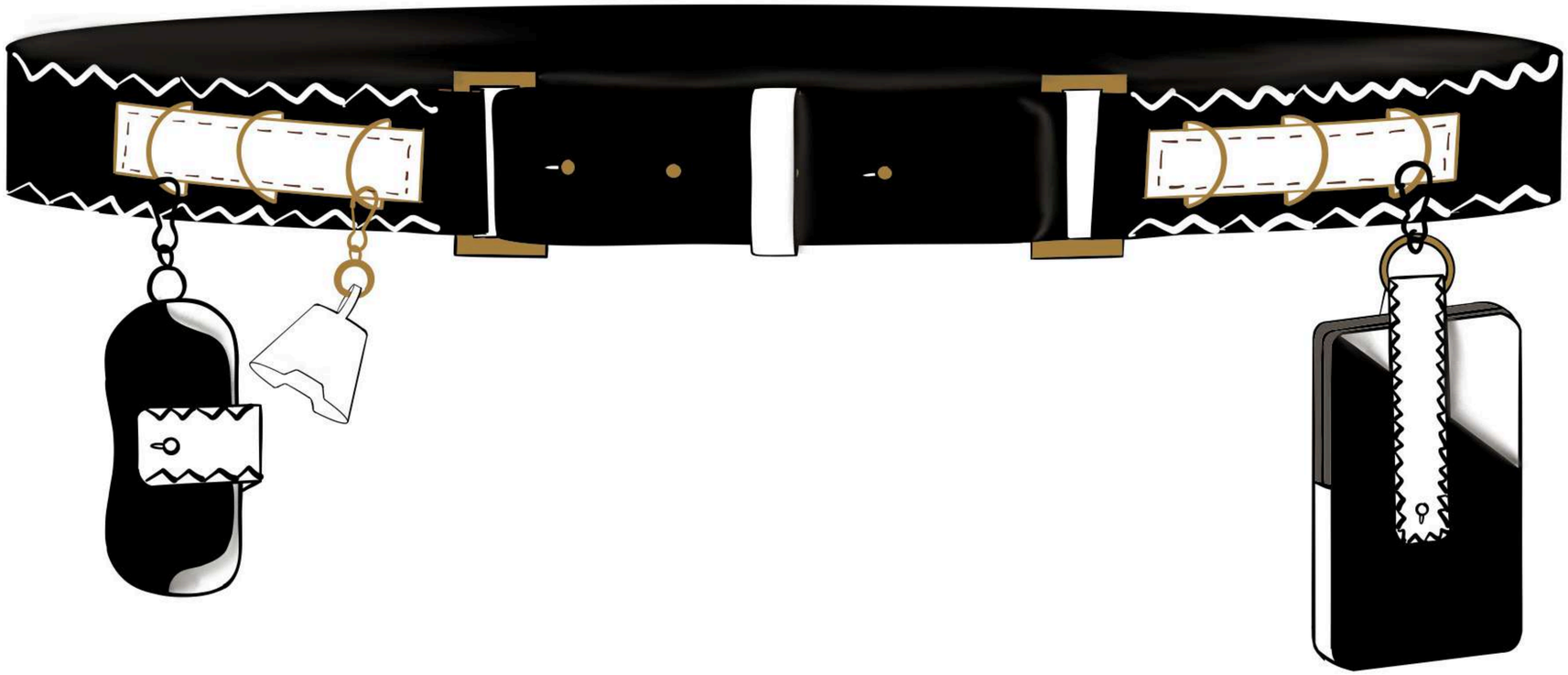

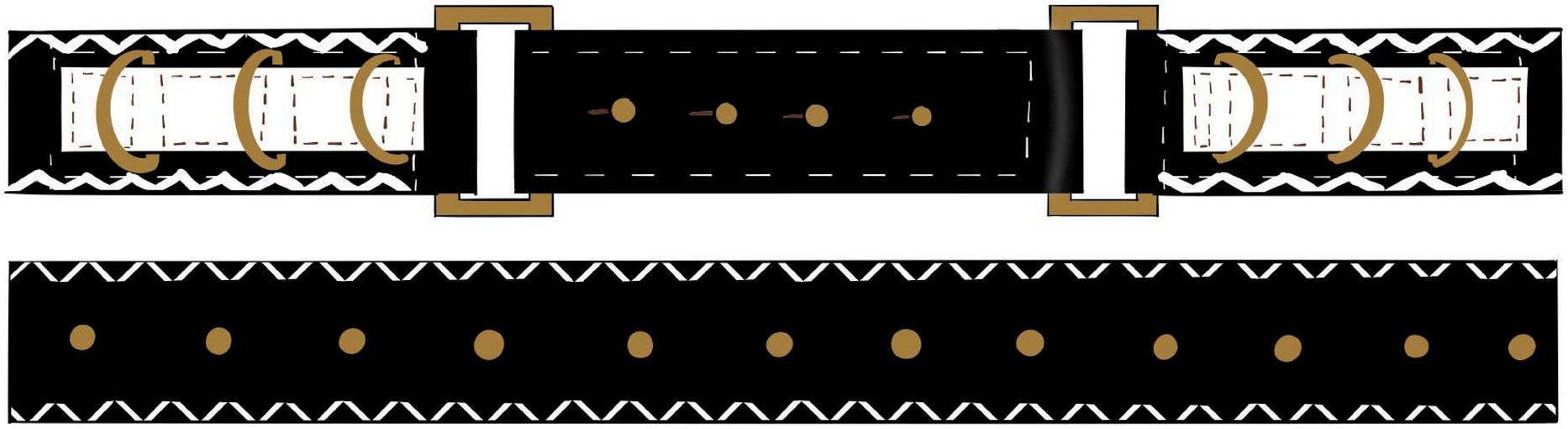

TECH SHEET – 1

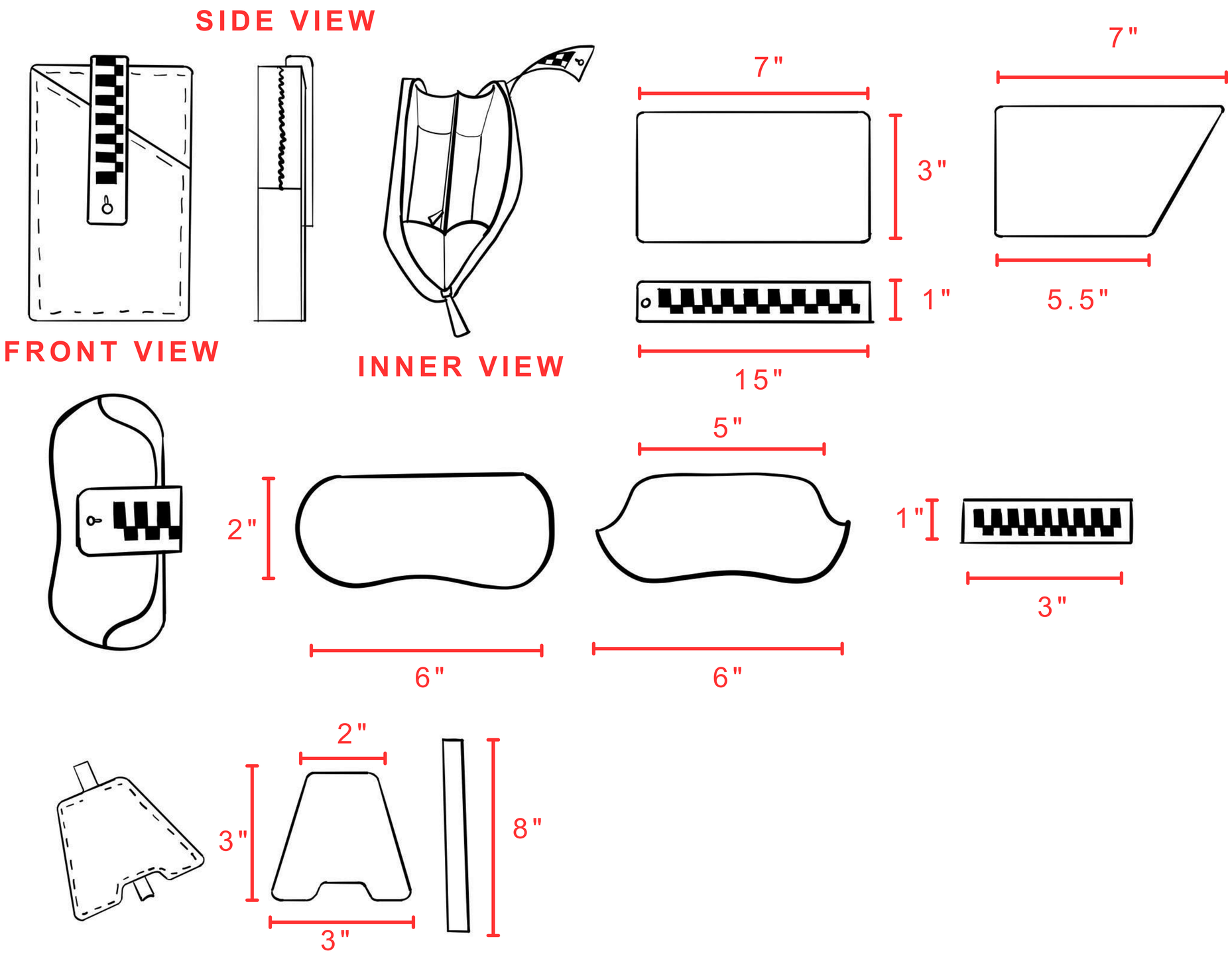

TECH SHEET – 2

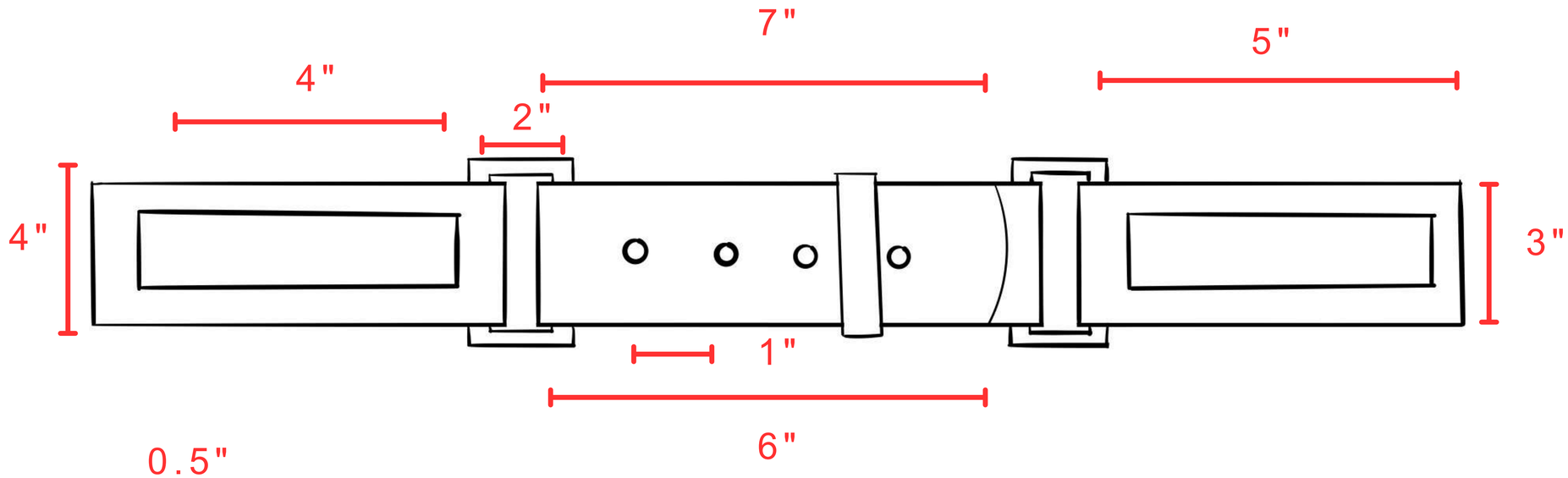

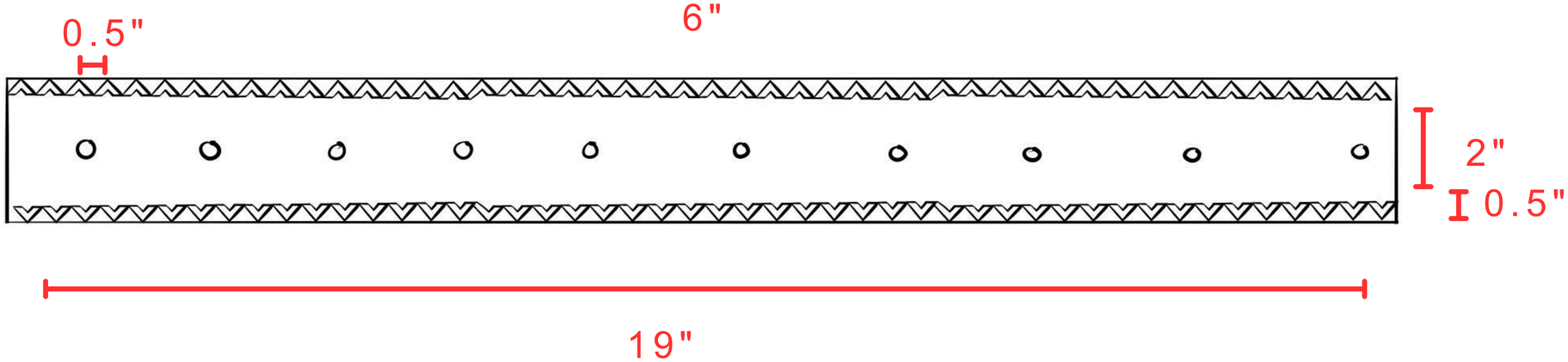

CMF

GENUINE LEATHER

SQUARE RINGS

D-RINGS

SIMILAR BUCKLES

FROM OFFICE MEETINGS

TO CASUAL OUTINGS

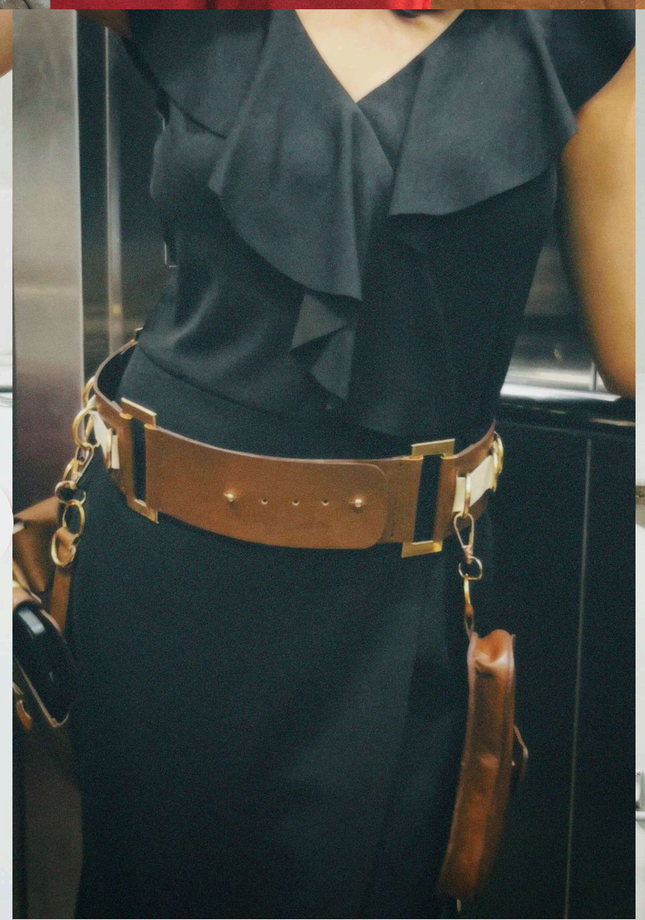
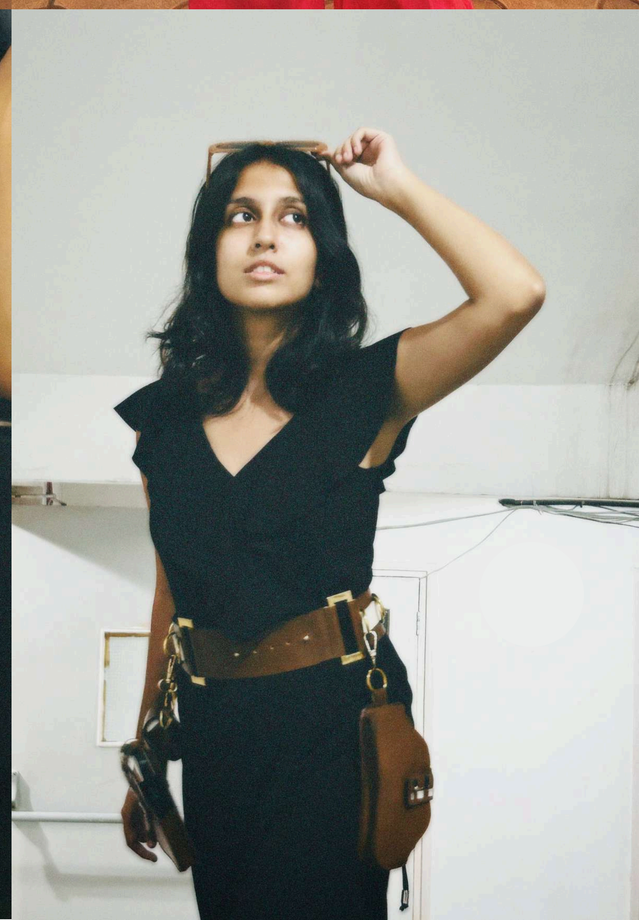

COSTING

Style					
ITEM	**VENDOR**	**PRICE**	**QUANTITY**	**UOM**	**AMOUNT**
Square ring	Fagnia	6	2	pcs	12
White Leather	Horsa International	200	1	hide	200
Black Leather	Horsa International	200	1	hide	200
D-ring	Fagnia	6	6	pcs	36
Studd Locks	Fagnia	6	12	pcs	72
Craftsmanship		500			500
Total					1220